TM 11-2223

WAR DEPARTMENT TECHNICAL MANUAL

TYPING AND NONTYPING REPERFORATORS

TELETYPE MODEL 14

WAR DEPARTMENT · SEPTEMBER 1947

TM 11-2223—TYPING AND NONTYPING REPERFORATORS, TELETYPE MODEL 14

TM 11-2223

WAR DEPARTMENT TECHNICAL MANUAL

TYPING AND NONTYPING REPERFORATORS

TELETYPE MODEL 14

WAR DEPARTMENT · SEPTEMBER 1947

WAR DEPARTMENT TECHNICAL MANUAL

TM 11-2223

This manual supersedes so much of TM11–2220, 8 November 1944, and TM11–2219, 21 November 1944, as pertains to typing reperforators; and so much of TM11–353, 2 July 1941; TM11–2203, 10 June 1944; TM11–2210, 9 May 1944; TM11–2211, 8 May 1944; TM11–2214, 8 August 1944; and TM11–2216, 27 November 1944, as pertains to typing and nontyping reperforators.

TYPING AND NONTYPING REPERFORATORS

TELETYPE MODEL 14

WAR DEPARTMENT • SEPTEMBER 1947

United States Government Printing Office

Washington: 1947

This manual contains copyrighted material.

WAR DEPARTMENT
Washington 25, D.C., 15 September 1947

TM 11–2223, Typing and Nontyping Reperforators, Teletype Model 14, is published for the information and guidance of all concerned.

[AG 300.7 (14 May 46)]

BY ORDER OF THE SECRETARY OF WAR:

OFFICIAL:
EDWARD F. WITSELL
Major General
The Adjutant General

DWIGHT D. EISENHOWER
Chief of Staff

DISTRIBUTION:

AAF (10); AGF (5); T (5); Dept (2); Base Comd (2); AAF Maj Comd (15); Arm & Sv Bd (1); AGF Bd (ea Sv test Sec) (1); Tech Sv (2); FC (2); Class III Instls (3); PE (10); Dep 11 (5) except Holabird (21), Sacramento (17); 4th & 5th Ech Maint Shops 11 (2); Tng Ctr (2); A (ZI) (20), Oversea (5); CHQ (2); Bn 11 (2); Two (2) copies to the following T/O & E's, 1–452T; 1–452R; 1–497S; 1–547; 1–562R; 1–600 (CG) (CJ) (RB); 1–627; 1–752; 1–757; 1–1037; 11–7; 11–15; 11–95; 11–107; 11–127; 11–337; 11–338; 11–547; 11–587; 11–597.

For explanation of distribution formula see TM 38–405.

COPYRIGHT NOTICE: This publication includes information contained in the following bulletins published by Teletype Corporation:

Bulletin 147, Issue 2, copyright 1936
Bulletin 162, Issue 1, copyright 1940
Bulletin 165, Issue 2, copyright 1936, 1938, 1941
Bulletin 172, Issue 2, copyright 1941
Bulletin 1080, Issue 1, copyright 1934
Bulletin 1117, Issue 2, copyright 1936, 1941

CONTENTS

BOOK 1. TYPING REPERFORATORS

		Paragraph	Page
PART ONE. INTRODUCTION.			
Section I.	Description	1–8	1
II.	Application	9–18	16
III.	Assembly and disassembly	19–23	23
PART TWO. OPERATING INSTRUCTIONS.			
Section IV.	Connections, preoperational adjustments, and tests	24–32	27
PART THREE. MAINTENANCE INSTRUCTIONS.			
Section V.	Preventive maintenance techniques	33–49	35
VI.	Preventive maintenance check list	50	45
VII.	Lubrication	51–54	47
VIII.	Moistureproofing and fungiproofing	55–58	61
PART FOUR. AUXILIARY EQUIPMENT.			
Section IX.	1A tape splicer	59–62	63
PART FIVE. REPAIR INSTRUCTIONS.			
Section X.	General repair procedure	63–64	64
XI.	Detailed functioning of equipment	65–108	64
XII.	Test equipment	109–110	99
XIII.	Trouble shooting	111–125	102
XIV.	Repairs and replacements	126–169	121
XV.	Requirements and adjustments	170–354	143

BOOK 2. NONTYPING REPERFORATORS

		Paragraph	Page
PART ONE. INTRODUCTION.			
Section I.	Description	355–360	199
II.	Application	361–364	202
III.	Assembly and disassembly	365–368	205
PART TWO. OPERATING INSTRUCTIONS.			
Section IV.	Connections, preoperational adjustments, and tests	369–376	206
PART THREE. MAINTENANCE INSTRUCTIONS.			
Section V.	Preventive maintenance techniques	377–383	208
VI.	Preventive maintenance check list	384	210
VII.	Lubrication	385–388	211
VIII.	Moistureproofing and fungiproofing	389–392	216
PART FOUR. AUXILIARY EQUIPMENT (Not used).			
PART FIVE. REPAIR INSTRUCTIONS.			
Section IX.	General repair procedure	393–394	218
X.	Detailed functioning of equipment	395–408	218
XI.	Test equipment	409	228
XII.	Trouble shooting	410–422	228
XIII.	Repairs and replacements	423–440	236
XIV.	Requirements and adjustments	441–493	246
APPENDIX I. REFERENCES			265
II. IDENTIFICATION TABLE OF REPLACEABLE PARTS			307
III. CONVERSION OF EQUIPMENT FOR 100 WORDS PER MINUTE OPERATION			340
INDEX			347

DESTRUCTION NOTICE

WHY—

To prevent the enemy from using or salvaging this equipment for his benefit.

WHEN—

When ordered by your commander.

HOW—

1. Smash—Use sledges, axes, handaxes, pickaxes, hammers, crowbars, heavy tools.
2. Cut—Use axes, handaxes, machetes.
3. Burn—Use gasoline, kerosene, oil, flame throwers, incendiary grenades.
4. Explosives—Use firearms, grenades, TNT.
5. Disposal—Bury in slit trenches, fox holes, other holes. Throw in streams. Scatter.

USE ANYTHING IMMEDIATELY AVAILABLE FOR DESTRUCTION OF THIS EQUIPMENT

WHAT—

1. Smash—Base, motor, typing reperforator unit, cover, relay, equipment table.
2. Cut—All power and signal cords and wiring.
3. Burn—Wooden cases, technical manuals, and records.
4. Bury or scatter—Any or all of the above.

DESTROY EVERYTHING

SAFETY NOTICE

SEVERE SHOCK MAY RESULT FROM CONTACT WITH CURRENT-CARRYING PARTS OF THIS EQUIPMENT. BE SURE THAT THE POWER IS OFF BEFORE TOUCHING TERMINALS AND CONDUCTORS WITH BARE HANDS. ALL TEST LEADS SHOULD BE INSULATED.

TL55877S

BOOK 1

TYPING REPERFORATORS

This manual supersedes so much of TM11–2220, 8 November 1944, and TM11–2219, 21 November 1944, as pertains to typing reperforators; and so much of TM 11–353, 2 July 1941; TM 11–2203, 10 June 1944; TM11–2210, 9 May 1944; TM11–2211, 8 May 1944; TM11–2214, 8 August 1944; and TM11–2216, 27 November 1944, as pertains to typing and nontyping reperforators.

PART ONE

INTRODUCTION

Section I. DESCRIPTION

1. General

a. Teletype model 14 typing reperforator is a motor-driven device for receiving and, when equipped with a keyboard base, transmitting messages in the form of electrical impulses and recording the messages both in code perforations and in typewritten characters on the same paper tape.

b. Model 14 typing reperforators are of two types: sending-receiving typing reperforators and receiving-only typing reperforators.

(1) The sending-receiving typing reperforator (fig. 1) is equipped with a keyboard base. Operation of the keyboard at the home station sets up electrical impulses which activate a simultaneous dual action: the impulse goes out over the line to the distant station to a receiving mechanism which code-perforates the tape; at the same time the impulse actuates the perforating mechanism of the home station typing reperforator, recording the outgoing message on perforated tape. Therefore messages may be transmitted either as electrical impulses directly from the keyboard to another machine or by using the code–perforated tape in a transmitter distributor.

(2) The receiving-only typing reperforator is not equipped with a keyboard base as this type of the equipment is used only for receiving. Receiving-only bases are of two types, designated low base and high base.

c. Teletype model 14 typing reperforator is used by the Army as tactical (field) equipment and as fixed plant (signal center) equipment. Normally the model 14 typing reperforator is used as part of a complete teletypewriter set or system and not as an independently operated unit. The type of tape recording provided by the model 14 typing reperforator, bearing the message both in type and in code-perforation, makes this equipment particularly useful in message and signal centers where large amounts of traffic (both relay and originating) must be handled without delay.

d. Code designations identifying model 14 typing reperforators include the use (tactical or fixed plant), the make or type of motor (General Electric, Holtzer-Cabot, Electric Sprayit, governed series, or synchronous), and the type-bar arrangement (weather or communication symbols). Table 1 shows the code designations in tabular form.

(1) The first section of the code designation is the use factor:

(*a*) FPR17 denotes tactical equipment; normally sending-receiving.

(*b*) FPR5 denotes fixed plant equipment; normally receiving-only.

(*c*) FPR21 denotes fixed plant equipment mounted on a low base; normally receiving-only.

(*d*) FPR23 denotes fixed plant equipment mounted on a high base; normally receiving-only.

(2) The first section is followed by letters designating the motor:

(*a*) FN denotes a General Electric governed series motor.

EXAMPLE:

Table I. Explanation of code designations

1 2 3	1		2		3	
	Unit prefix	Type of unit		Motor		Type of characters	
FPR17 FN 226	FPR	17	tactical	FN	General Electric (governed series)	222	Weather
		5	fixed plant				
		21	fixed plant				
		23	fixed plant	FT	Holtzer-Cabot (governed series)	226	Communi-cation
				GB	Governed series* (general)		
				H	Synchronous* (general)		

*Made by General Electric, Holtzer-Cabot, and Electric Sprayit.

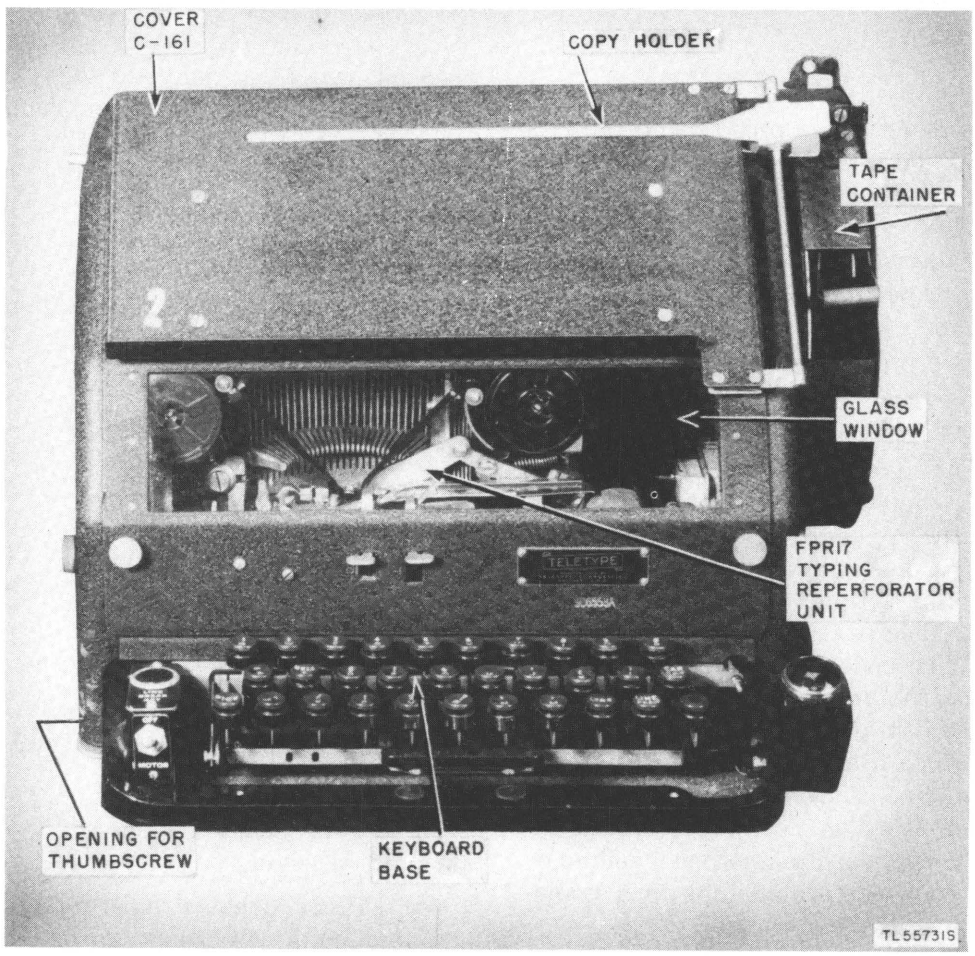

Figure 1. Model 14 (FPR17) typing reperforator, complete with cover.

(b) FT denotes a Holtzer-Cabot governed series motor.

(c) GB denotes a governed series motor; may be made by General Electric, Holtzer-Cabot, or Electric Sprayit.

(d) H denotes a synchronous motor; may be made by General Electric, Holtzer-Cabot, or Electric Sprayit.

(3) The last section of the code designation gives the type-bar arrangement:

(a) The number 222 denotes weather symbols.

(b) The number 226 denotes communication symbols.

(4) Following are examples of model 14 typing reperforator code designations:

(a) FPR17FN226 is tactical equipment, has a General Electric governed series motor, and transmits and receives communication symbols.

(b) FPR17FT222 is tactical equipment, has a Holtzer-Cabot governed series motor, and transmits and receives weather symbols.

(c) FPR21GB226 is fixed plant equipment mounted on a low base, has a governed series motor, and receives communication symbols.

(d) FPR23H222 is fixed plant equipment mounted on a high base, has a synchronous motor, and receives weather symbols.

e. Descriptive information and detailed maintenance and repair instructions for model 14 typing reperforators (FPR17, FPR5, FPR21, and FPR23) are covered in this technical manual. Planning data, installation procedures, and operating features are given in technical manuals covering the teletypewriter set or system of which the particular model 14 typing reperforator is a part; these related technical manuals are referenced throughout this manual. The technical manuals with which this manual normally will be used and in which will be found installation and operation instructions for the particular model 14 typing reperforator supplied with the equipment are listed in appendix I. It also lists technical manuals for other complete teletypewriter sets or systems in which model 14 typing reperforators are commonly used.

2. Model 14 (FPR17) Typing Reperforator

a. GENERAL (FIG. 2). (1) The four principal models of the FPR17 typing reperforator covered in this manual are the FPR17FN222, FPR17FN226, FPR17FT222, and FPR17FT-226. The model 14 (FPR17) sending-receiving typing reperforator is used as tactical equipment and is part of tactical teletypewriter sets such as Reperforator Transmitters TG–26–A and TG–27–A.

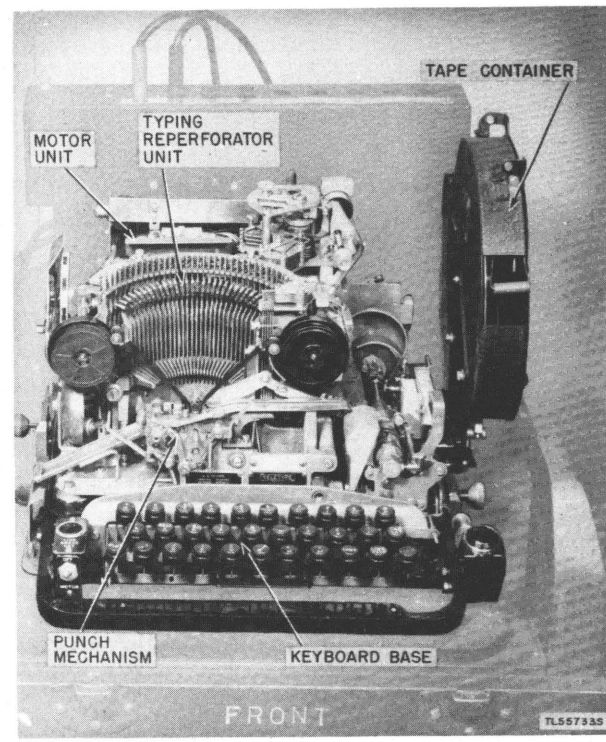

Figure 2. Model 14 (FPR17) typing reperforator, cover removed.

(2) When set up and ready for use, FPR17 typing reperforators are approximately 16⅜ inches long, 16⅛ inches wide, 11¾ inches high, and weigh approximately 62¼ pounds.

(3) In normal use, the FPR17 typing reperforator is permanently mounted, with other teletypewriter equipment, on a wooden chest.

b. BASE. The base is a metal casting on which is mounted the keyboard transmitter, tape container, keylevers that form the keyboard, motor switch, break key, end-of-line indicator, tape-out alarm bell, slip-connection block, and terminal block. External wiring for the typing reperforator is connected to the terminal block, located at the rear right-hand corner on the upper side of the base. (See fig. 3.) Four resilient, shock-absorbing mountings (Lord mountings) are used to fasten the base on the chest.

c. TYPING REPERFORATOR UNIT (FIG. 4). (1) The typing reperforator unit includes the motor (*d* below), main shaft, pulling magnet type selector mechanism, printing and perforating mechanisms, and ribbon feed and end-of-

line indicator contact mechanisms, all of which are mounted on a metal casting and form a compact assembly. The symbols printed by the type pallets of the printing mechanism may be either standard communications symbols or weather symbols.

(2) The typing reperforator unit is mounted on the base (*b* above) and is held in place by two knurled thumbscrews (fig. 8) and two locating pins. (See fig. 9.)

(3) Electrical circuits between the typing reperforator unit and the base are connected by means of contact screws which match the slip-connection terminals.

d. MOTORS. (1) The General Electric and Holtzer-Cabot governed series motors furnished with FRP17 typing reperforators operate either on 115-volt direct current (dc) or on unregulated 115-volt, 25- to 60-cycle alternating current (ac). Adjustment to the available type of power is made by means of the power selector switch on the associated equipment.

(2) Motors may be adjusted either for 2,102 or 2,308 revolutions per minute (rpm) and the FPR17FN226 and FPR17FT226 equipments, carrying communication symbols, may be used for interoperation with British (Creed) teleprinter equipment. (See par. 7*a*(2)(*a*).) (Equipment carrying weather symbols is not used for interoperation with British equipment.)

(3) The gears, target, and tuning fork required for use with FPR17 motors are listed in paragraph 7, table IV.

Note. FPR17 motors are interchangeable as units but the internal parts of General Electric and Holtzer-Cabot motors are not interchangeable. FPR17 motors are the same as those supplied with Printer TG–7–A and Teletypewriters TG–7–B and TG–37–B, thus facilitating motor replacement in the field.

e. COVER (FIG. 1). The FPR17 typing reperforator cover, designated C–161, fastens to the base with two thumbscrews, one on each side of the typing reperforator. A glass window on the front of the cover provides a limited internal view of the equipment.

3. Model 14 (FPR5) Typing Reperforator (fig. 6)

The principal model of FPR5 typing reperforators covered in this manual is the FPR5GB. This typing reperforator is used with fixed plant teletypewriter equipment such as Teletypewriter Set AN/TGC–1. When set up ready for use, FPR5 typing reperforators are approximately 12 inches long, 13 inches wide, 8½

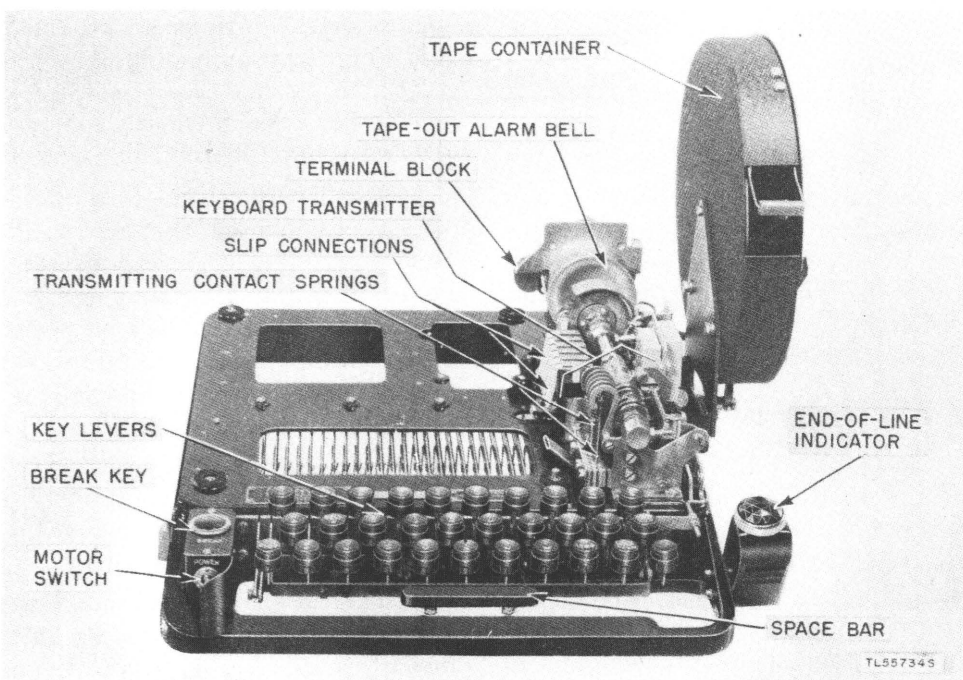

Figure 3. Sending-receiving base for model 14 (FPR17) typing reperforator.

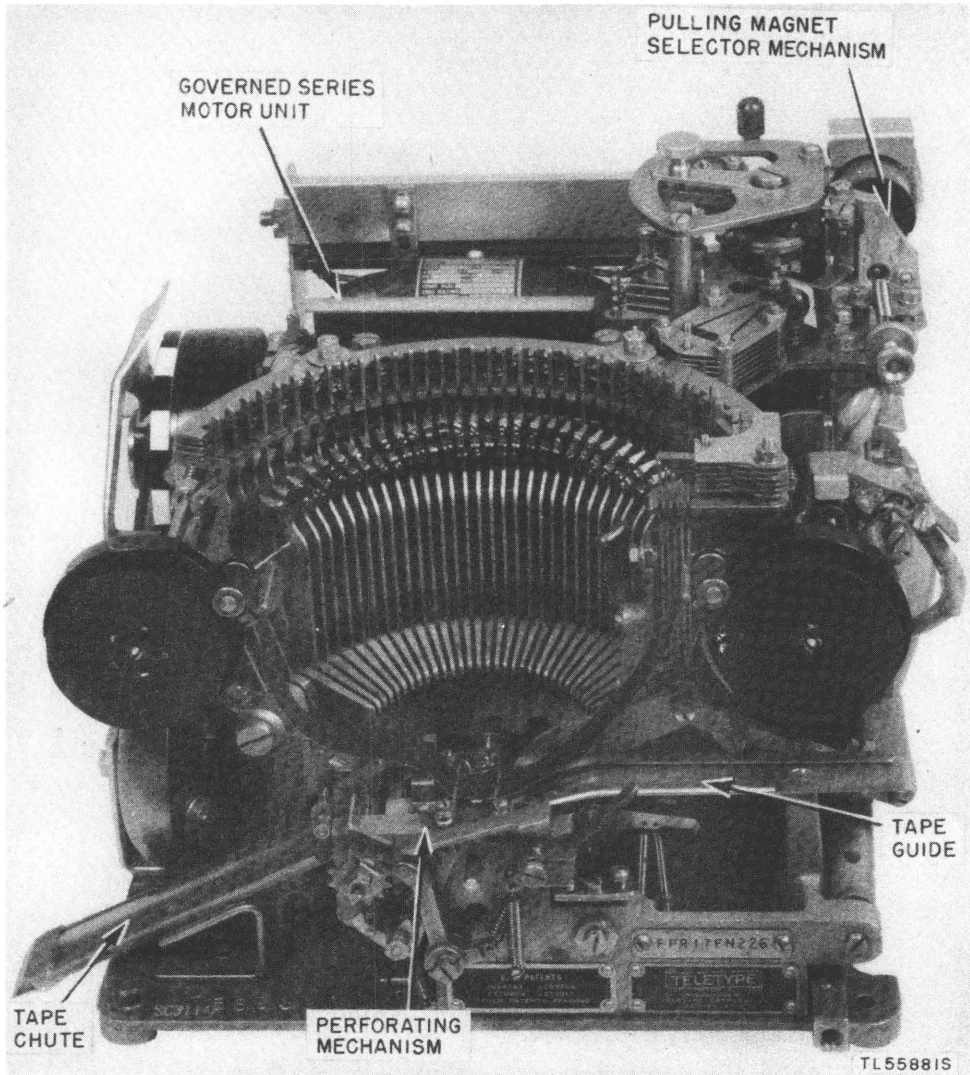

Figure 4. Model 14 (FPR17) typing reperforator unit.

inches high, and weigh approximately 34¼ pounds. In normal use the FPR5 typing reperforator does not require a base. Either governed series (par. 2*d*) or synchronous motors (par 4*d*(2)) may be supplied with the FPR5 typing reperforator. It is mounted in a console housing the entire teletypewriter set.

4. Model 14 (FPR21) Typing Reperforator

a. GENERAL (FIG. 7). (1) The four principal models of the FPR21 typing reperforator covered in this manual are the FPR21H226, FPR21GB226, FPR21H222, and FPR21GB222. The model 14 (FPR21) receiving-only typing reperforator is used in fixed plant installations and is part of fixed plant teletypewriter equipment such as 132 and 133 teletypewriter sets.

(2) When set up and ready for use, FPR21 typing reperforators are 16⅜ inches long, 13½ inches wide, 11¾ inches high, and weigh approximately 62¼ pounds.

(3) In normal use, the FPR21 typing reperforator is mounted, with other teletypewriter equipment, on the metal tables of the 132 and 133 teletypewriter sets.

b. BASE. (1) The base is a metal casting on which is mounted the tape container, motor switch, tape-out alarm bell, slip-connection block, and terminal block. External wiring for the typing reperforator is connected to the terminal block, located at the rear right-hand

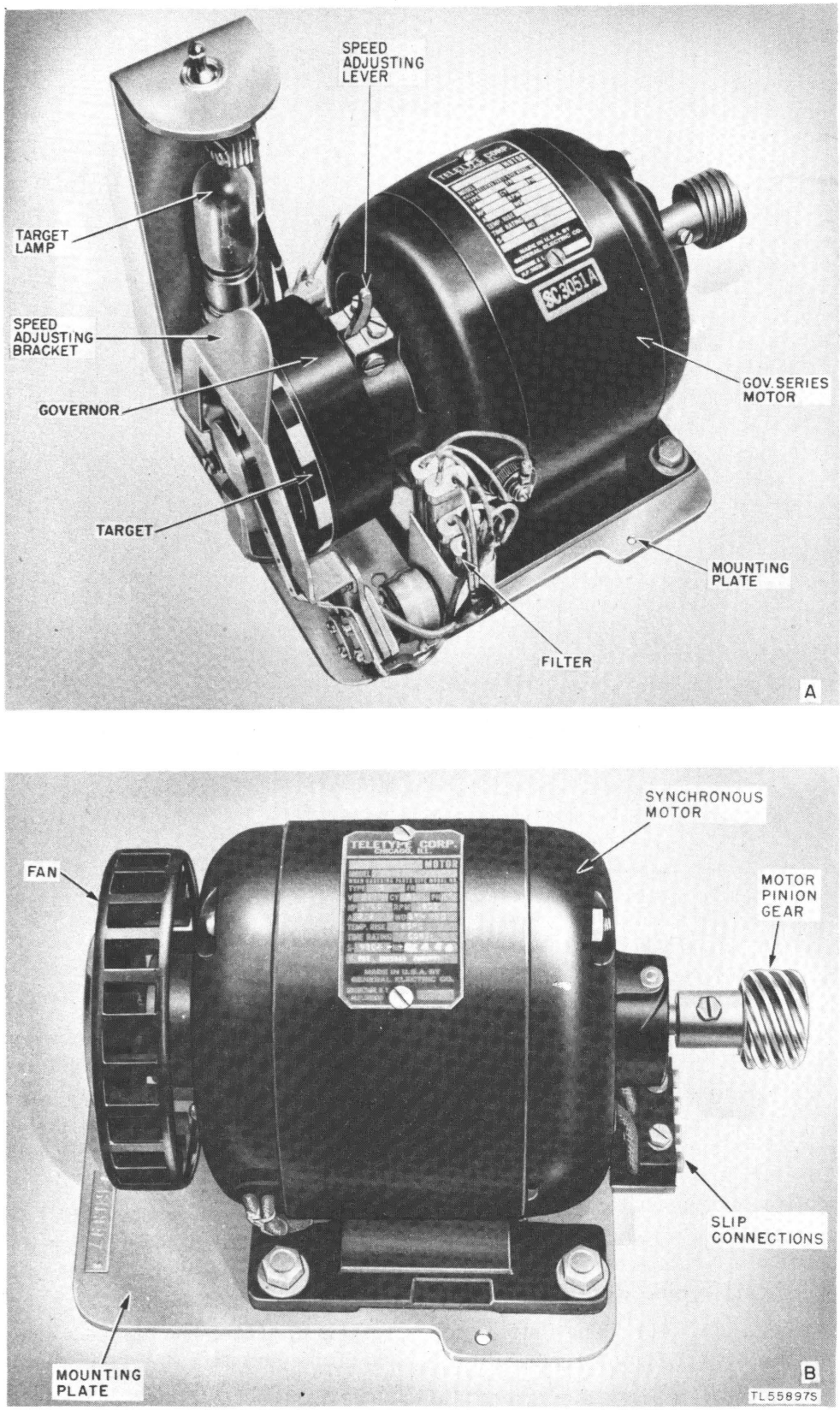

Figure 5. Typical governed series motor unit (A) and synchronous motor (B).

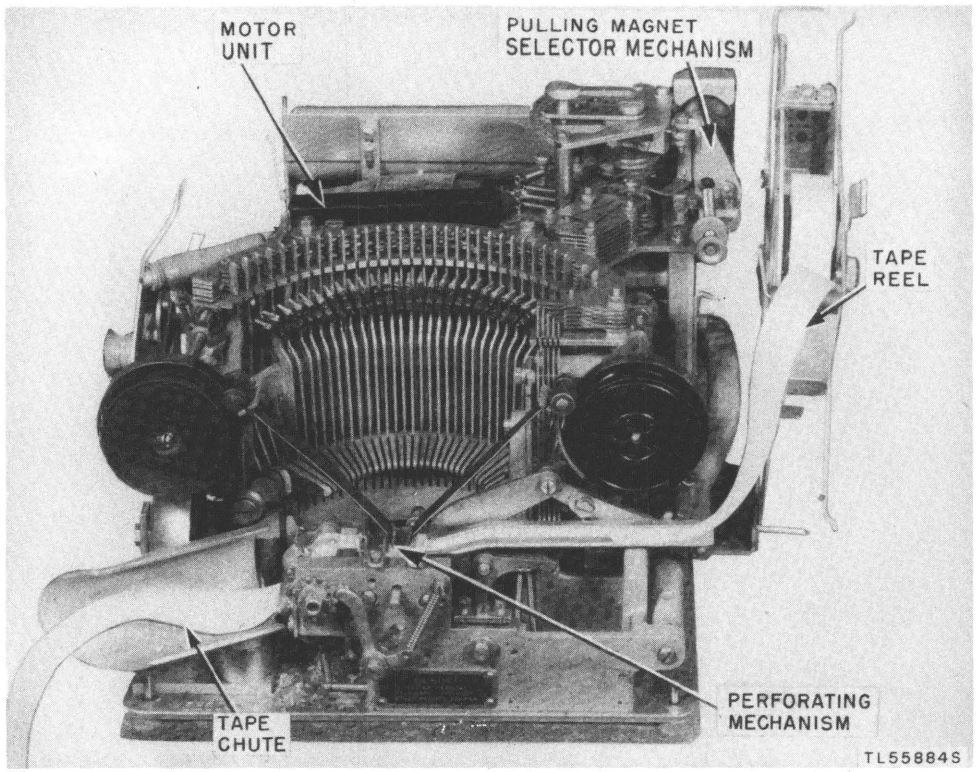

Figure 6. Model 14 (FPR5) typing reperforator.

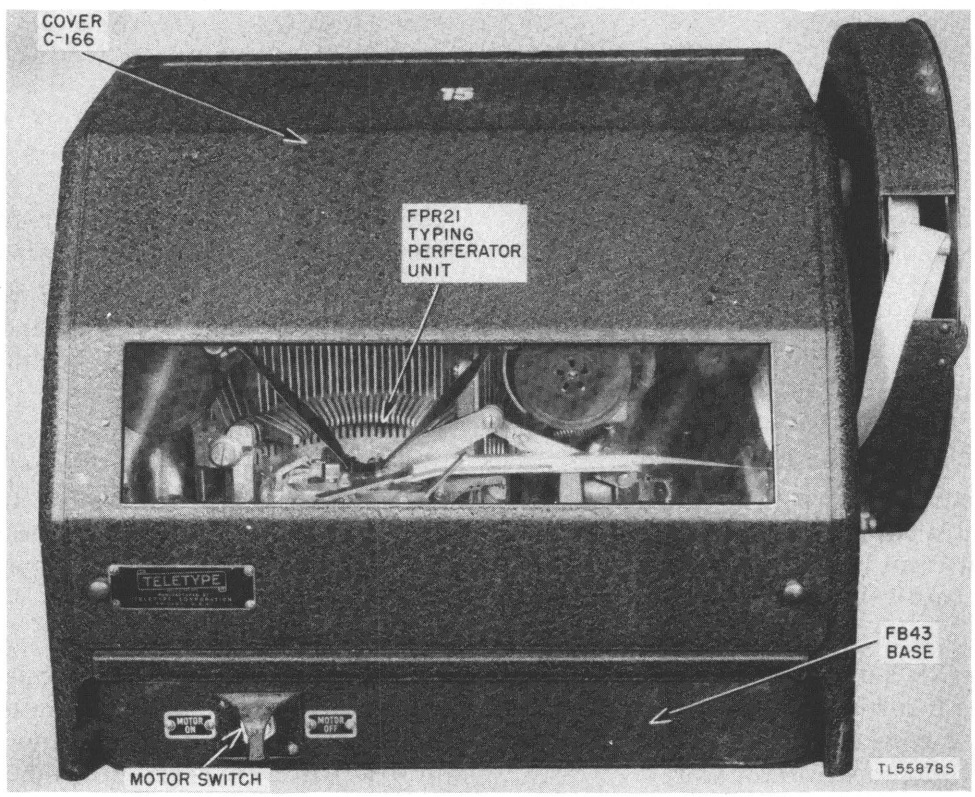

Figure 7. Model 14 (FPR21) typing reperforator, complete with cover.

807975 O - 48 - 2

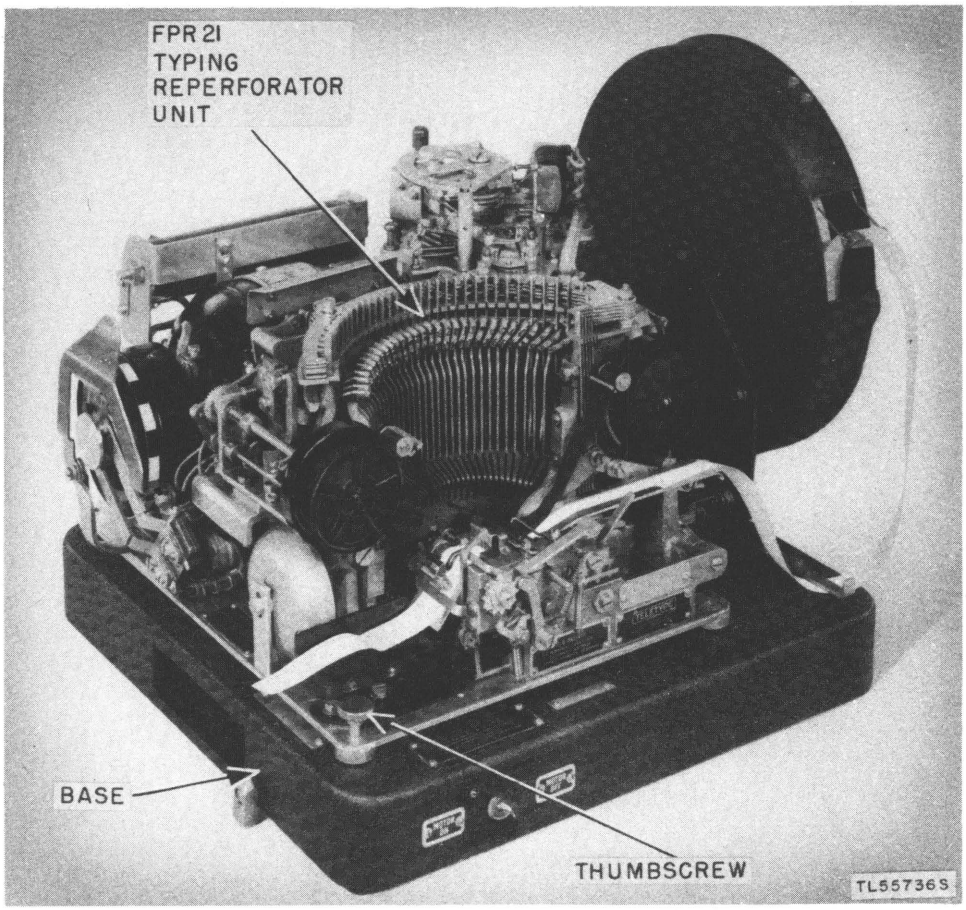

Figure 8. Model 14 (FPR21) typing reperforator, cover removed.

corner on the upper side of the base. (See fig. 9.) Four resilient, rubber feet are mounted on the bottom of the base to absorb vibration. The base rests on but is not fastened to the metal table of the associated equipment.

(2) The base of the FPR21 is similar to the FPR17 base (par. 2*b*) but does not include the keyboard and transmitter mechanisms.

(3) The base of the FPR21 is a receiving-only base and is designated low base (FB43) to distinguish it from the FPR23 base (also a receiving-only base) which is a high base. (See fig. 12.)

c. TYPING REPERFORATOR UNIT (FIG. 10). There are the following differences between the FPR17 typing reperforator unit (par. 2*c*) and the FPR21 typing reperforator unit:

(1) The motor and the selector mechanism differ in the two units.

(2) The FPR21 typing reperforator has a clutch throw-out lever contact mechanism.

(3) The FPR21 typing reperforator has no end-of-line indicator. (End-of-line indicators are not used on receiving-only typing reperforators.)

d. MOTORS. (1) For operation either on 115-volt dc or unregulated 115-volt, 25- to 60-cycle ac, governed series motors are supplied. These motors are furnished to operate at one of three speeds: 1,800 rpm, 2,102 rpm, and 2,308 rpm.

(*a*) FPR21 typing reperforators carrying communication symbols and equipped with governed series motors designed for operation at 2,102 or 2,308 rpm may be used for interoperation with British teleprinter equipment.

(b) Typing reperforators equipped with motors having a correct speed of 1,800 rpm are not

satisfactory for interoperation with British teleprinter equipment.

(2) For operation from a regulated source of 115-volt, 60-cycle ac, synchronous motors with a speed of 1,800 rpm are supplied. Typing reperforators equipped with these synchronous motors are not satisfactory for interoperation with British equipment.

(3) The motor and governor brush assembly of the FPR21 (when used) are mounted on a motor mounting plate which is fastened to the typing reperforator unit frame.

(4) Motors supplied with FPR21 are manufactured by General Electric, Holtzer-Cabot, and Electric Sprayit. All three of the motors are interchangeable as units but all of their internal parts are not interchangeable.

(5) The gears, target, and tuning fork required for use with each of the motors are listed in paragraph 7, table IV.

e. COVER. The typing reperforator cover, designated C–166, is similar to the cover used with the FPR17 typing reperforator (par. 2*e*), differing mainly in the following details:

(1) There is no copy holder on the C–166 cover (fig. 7) and the control levers do not extend through the front of the cover as they do on the sending-receiving typing reperforator. (See fig. 1.)

(2) The cover does not fasten to the base and can be removed easily by lifting it straight up.

5. Model 14 (FPR23) Typing Reperforator

a. GENERAL. (1) The four principal models of FPR23 typing reperforators covered in this manual are the FPR23H226, FPR23GB226, FPR23H222, and FPR23GB222. These model 14 receiving-only typing reperforators are used with fixed plant teletypewriter equipment such

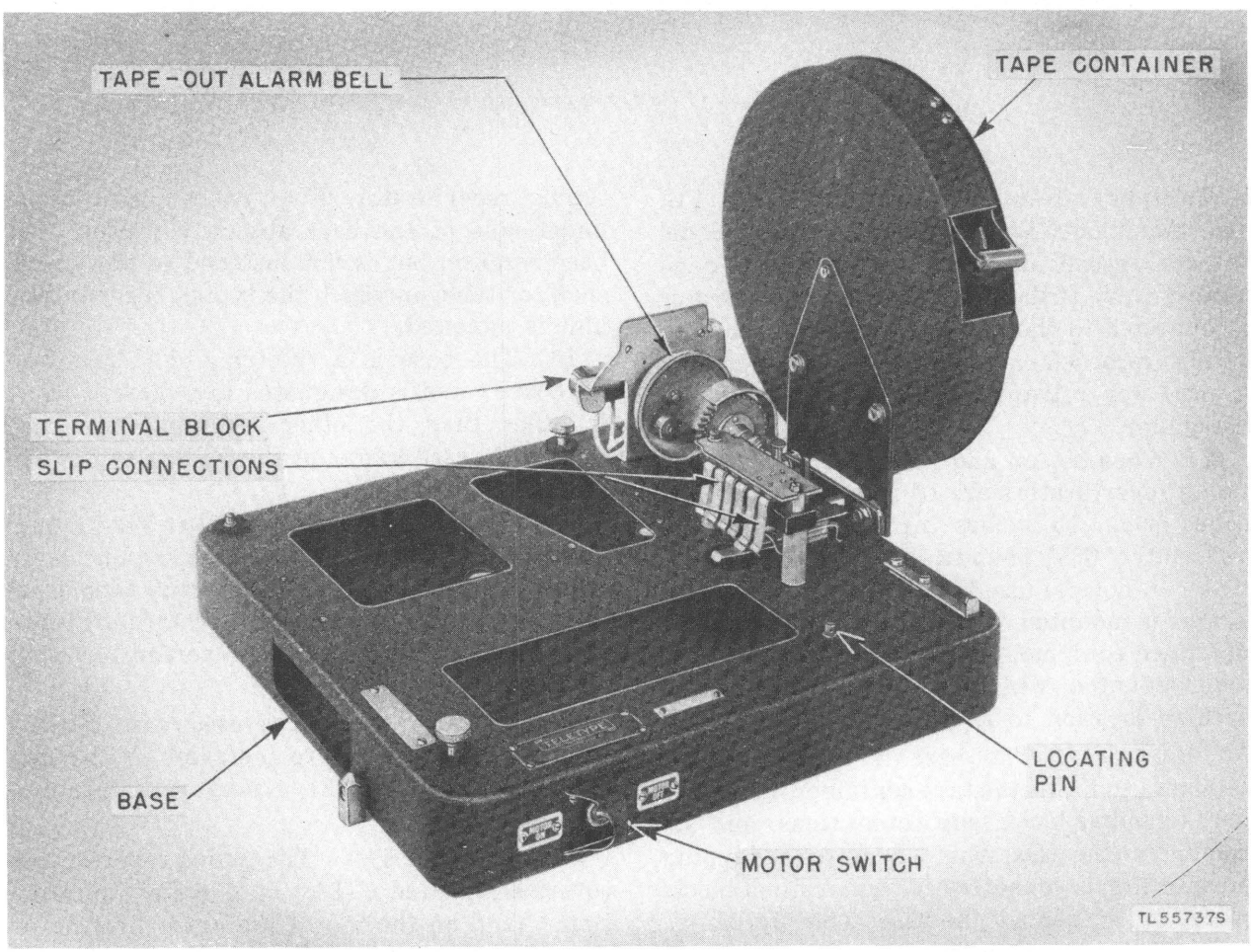

Figure 9. Receiving-only (low) base for model 14 (FPR21) typing reperforator.

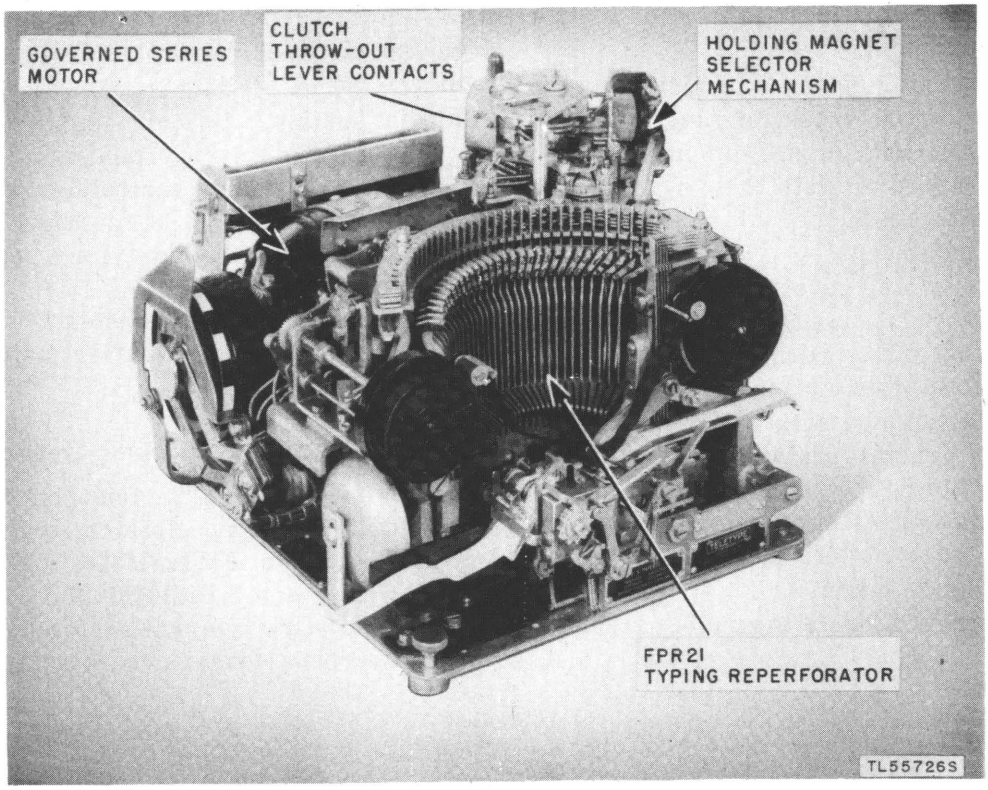

Figure 10. Model 14 (FPR21) typing reperforator unit.

as Teletypewriters TT–7/FG and TT–8/FG, and other model 19 teletypewriter sets. Model 19 sets record incoming messages as page printed copy. If the FPR23 typing reperforator is connected to the model 19 set, the messages are also recorded on perforated tape which may be used for retransmission by a transmitter distributor.

(2) When set up and ready for use, FPR23 typing reperforators are 13½ inches long, 13¼ inches wide, 15 inches high, and weigh approximately 62¼ pounds.

(3) In normal use, the FPR23 typing reperforator is mounted on a bench or table near the associated equipment, or on a small metal table, caster-mounted, which can be moved from one machine location to another.

b. BASE. (1) The base is constructed of metal and contains the tape container, line-relay base, terminal block, slip connections, and associated wiring. External wiring for the typing reperforator is connected to the terminal block, located on the rear of the base. (See fig. 12.)

(2) Two metal brackets, mounted on the bottom of the base, support the weight of the typing reperforator. Four rubber feet on the under side of the base absorb vibration. The base rests on but is not fastened to the bench, shelf, or table on which the typing reperforator unit is mounted.

(3) The base is a receiving-only base (no keyboard) and is designated high base since it is taller than the other receiving-only base (par. 4*b*), used to mount the FPR21 typing reperforator.

c. TYPING REPERFORATOR UNIT (FIG. 13). Except that it has no clutch throw-out lever contact mechanism and a different tape platform, the FPR23 typing reperforator unit is the same as the FPR21 typing reperforator unit. (See par. 4*c*.)

d. MOTORS. The motors used with FPR23 typing reperforators are the same as the motors used with FPR21 typing reperforators. (See par. 4*d*.)

e. COVER (FIG. 11). The typing reperforator cover, designated C–168, is of metal construction. A lid on the top of the cover lifts up so that the typing reperforator unit may be inspected without removing the cover, and a door

on the front of the cover permits access to the tape container so that the tape supply may be replenished without lifting the cover.

6. Message Tapes

Messages recorded on tape produced by model 14 typing reperforators appear on the tape both in typewritten characters and in code perforations. Since the typewritten characters and the code perforations occupy the same area on the tape, complete perforation of the tape would remove part of the printing, thereby impairing the readability of the typewritten message. Therefore a chadless form of perforation is used. The punchings, or chads, are not completely severed from the tape; about 75 percent of the circumference of the chad is severed, the rest remaining attached and forming a lid for the hole or perforation cut in the tape. Figure 14 shows a sample of chadless perforated tape.

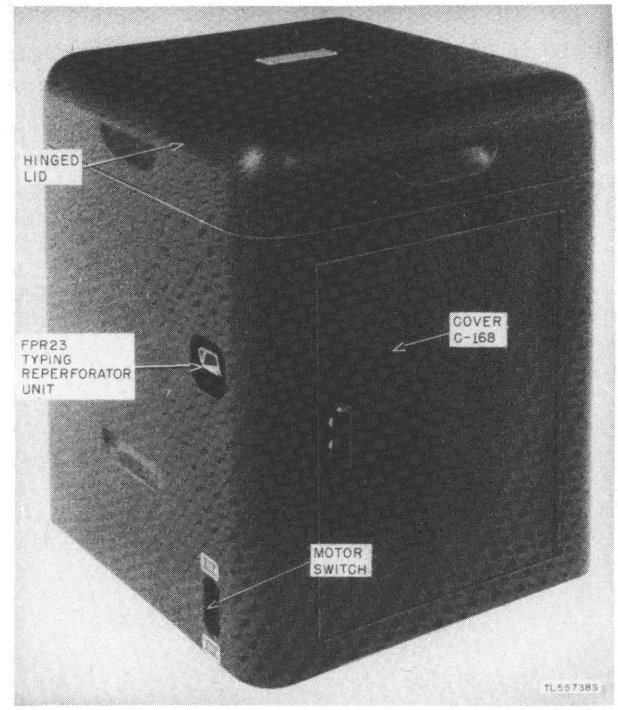

Figure 11. Model 14 (FPR23) typing reperforator, complete with cover.

7. Differences In Models

a. Principal differences between model 14 typing reperforator equipments are given in tables II, III, and IV.

(1) Types of service, principal components, dimensions, and weights are given in tables II and III.

(2) Gears, pinions, targets, speeds, tuning forks, and governor contact filters for model 14 typing reperforator motors are given in table IV.

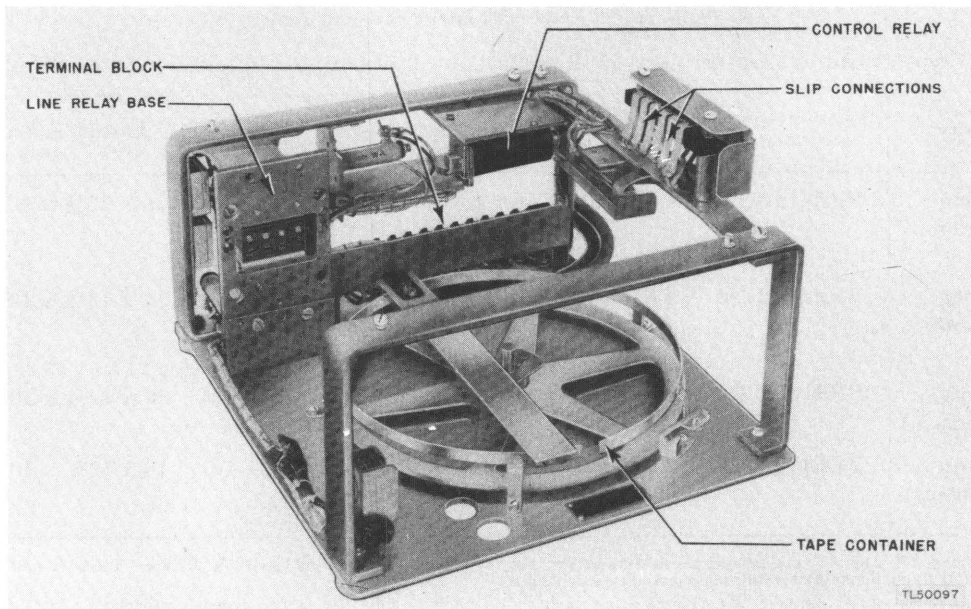

Figure 12. Receiving-only (high) base for model 14 (FPR23) typing reperforator.

(a) All governed series motors, whether designed to operate at 1,800, 2,102, or 2,308 rpm, may be equipped with gears and target to run the typing reperforators at the 368 operations per minute (opm) used in American teletypewriter systems. Governed series motors designed to operate at 2,102 or 2,308 rpm also may be adjusted to operate at the 404 opm required for interoperation with British equipment.

(b) Synchronous motors designed to operate at 1,800 rpm run typing reperforators at 368 opm but cannot be adjusted for interoperation with British equipment which uses 404 opm.

(c) Both governed series and synchronous motors may be modified by changing the gears to operate at 600 opm. Generally such modifications will be made only on fixed plant equipment and should not be performed unless specifically directed by higher authority.

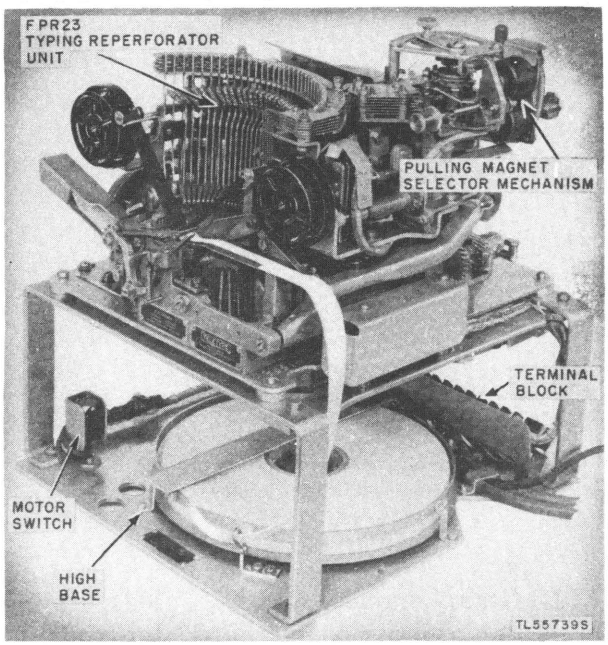

Figure 13. Model 14 (FPR23) typing reperforator, cover removed.

b. Shortages of critical materials have resulted in minor differences in the construction of parts for model 14 typing reperforators. In general, the substitution of materials has resulted in no change in the requirements and adjustment of parts, nor in the interchangeability of parts. The code designation of the typing reperforator is not affected by such substitution of materials.

8. Packaging Data for Export Shipment

a. Packing procedures vary with different types of model 14 typing reperforators. The subparagraphs below describe the packing methods generally used in preparing tactical

Table II. Tactical equipment components

Typing reperforators used as part of Reperforator Transmitters TG—26—A and TG—27—A.

Type of service	Typing reperforator unit	Base	*Motor	Cover	Dimensions (in.)	Weight (lb)
Sending-receiving (communication symbols)	FPR17FN226	FK105KH	A-c gov series (General Electric)	C—161	16 x 12½ x 10½	62¼
Sending-receiving (communication symbols)	FPR17FT226	FK105KH	A-c gov series (Holtzer-Cabot)	C—161	16 x 12½ x 10½	62¼
Sending-receiving (weather symbols)	FPR17FN222	FK105KQ	A-c gov series (General Electric)	C—161	16 x 12½ x 10½	62¼
Sending-receiving (weather symbols)	FPR17FT222	FK105KQ	A-c gov series (Holtzer-Cabot)	C—161	16 x 12½ x 10½	62¼

*Motor combinations FN and FT are interchangeable and are the same type motors as used on Printer TG-7-A and Teletypewriters TG-7-B and TG-37-B to facilitate motor interchangeability in the field.

Note. For Signal Corps stock numbers add 4T preceding each code number. This list is for general information only. See appropriate publications for information pertaining to requisition of spare parts. Stock numbers are indicated in this table for identification purposes only.

Table III. Fixed plant equipment components

Typing reperforators used as part of 132 and 133 teletypewriter sets and as monitors for Teletypewriters TT—7/FG and TT—8/FG and other model 19 teletypewriter sets.

Type of service	Typing reperforator unit	Base	*Motor	Cover	Dimensions (in.)	Weight (lb)
Receiving-only (communication symbols)	FPR5GB193	None	A-c gov series	None	13 x 12 x 8½	34¼
Receiving-only (low base, communication symbols)	FPR21H226	FB43	A-c synchronous	C—166	13½ x 16¾ x 11½	62¼
Receiving-only (low base, communication symbols)	FPR21GB226	FB43	A-c gov series	C—166	13½ x 16¾ x 11½	62¼
Receiving-only (low base, weather symbols)	FPR21H222	FB43	A-c synchronous	C—166	13½ x 16¾ x 11½	62¼
Receiving-only (low base, weather symbols)	FPR21GB222	FB43	A-c gov series	C—166	13½ x 16¾ x 11½	62¼
Receiving-only (high base, communication symbols)	FPR23H226	FPRB4	A-c synchronous	C—168	13½ x 16¾ x 11½	62¼
Receiving-only (high base, communication symbols)	FPR23GB226	FPRB4	A-c gov series	C—168	13½ x 16¾ x 11½	62¼
Receiving-only (high base, weather symbols)	FPR23H222	FPRB4	A-c synchronous	C—168	13¼ x 16¾ x 11½	62¼
Receiving-only (high base, weather symbols)	FPR23GB222	FPRB4	A-c gov series	C—168	13¼ x 16¾ x 11½	62¼

*Different makes of motors are interchangeable as a complete motor; however, the internal parts of the different motors are not interchangeable.

Note. For Signal Corps stock numbers add 4T preceding each code number. This list is for general information only. See appropriate publications for information pertaining to requisition of spare parts. Stock numbers are indicated in this table for identification purposes only.

and fixed plant typing reperforators for export shipment.

(1) *Model 14 (FPR17) Typing Reperforator.* The manufacturer packs model 14 (FPR17) typing reperforators in two different ways, depending on whether it is new equipment or whether it is equipment being ordered as a replacement.

(a) The new model 14 (FPR17) typing reperforator, part of Reperforator Transmitters TG–26–A and TG–27–A, is permanently mounted on the base of the chest with the other components and the entire equipment is packed in one box. For details on the method of unpacking Reperforator Transmitters TG–26–A and TG–27–A, refer to TM 11–2201.

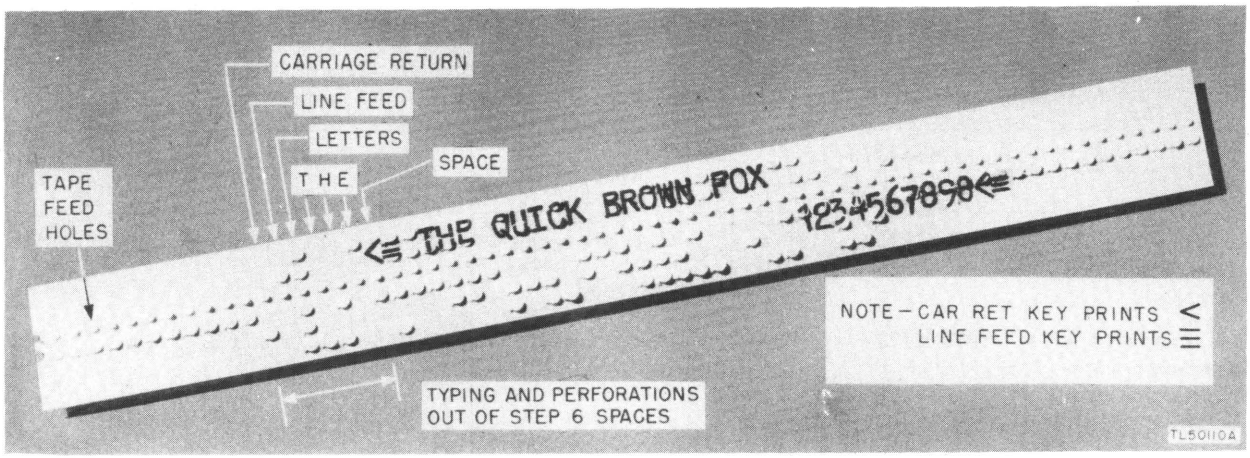

Figure 14. Sample of chadless perforated tape.

(*b*) A replacement model 14 (FPR17) typing reperforator is packed like fixed plant typing reperforators ((2) below), the various major components being boxed separately.

(2) *Model 14 (FPR5) Typing Reperforators.* Model 14 (FPR5) typing reperforators which are used as part of Teletypewriter Set AN/TGC–1 are usually packed as a separate item. In general, the FPR5 typing reperforators will be packed as described in (3) below.

(3) *Model 14 (FPR21 and FPR23) Typing Reperforators.* Model 14 (FPR21), part of 132 and 133 teletypewriter sets, and model 14 (FPR23), used with model 19 teletypewriter sets, are usually packed in the same general manner:

(a) Major components (typing reperforator unit, base, cover, and table (when used)) are each packed in a separate box.

(b) When packed for export shipment, several of the individual items of equipment frequently are placed in one waterproof metal container which in turn is packed in a larger wooden box. A layer of excelsior between the metal container and the wooden box protects the contents during transportation.

b. Each major component of a complete set is usually packed in a separate box. The data

Contents of package	Outside dimensions (in.)	Volume (cu. ft)	Gross weight (lb)
Typing reperforator 4TFPR17FN226	24¾ x 20¾ x 16¾	5.5	86
Base 4TFK105KH	31½ x 26⅜ x 18½	8.9	111
Cover 4TC161	22 x 20¾ x 20¼	6.7	18
Typing reperforator 4TFPR5H	24¾ x 20¾ x 16¾	5.5	86
Typing reperforator 4TFPR21GB226	24¾ x 20¾ x 16¾	5.5	86
Base 4TFB43	25⅞ x 20⅞ x 14½	4.2	49
Cover 4TC166	22 x 20¾ x 20¼	6.7	18
Typing reperforator 4TFPR23GB226	24¾ x 20¾ x 16¾	9.8	150
Base 4TFPRB4	25¾ x 20⅜ x 13½	4.0	50
Cover 4TC168	22 x 20¾ x 20½	6.7	5.2

Table IV. Principal differences in motors, gears, targets, etc.

Typing reperforator unit	Motor unit	Motor		Gear		Pinion		Target		Speed		Tuning fork		Governor contact filter
Code No.	Part No.	Part No.	Type	Part No.	Teeth	Part No.	Teeth	Part No.	Spots	Opm	Motor rpm	Part No.	Vps	Part No.
FPR17FN226 and FPR17FN222	105738	77953	A-c governed series	73106	35	71974	7	7105	10	368 *404	2,102 2,308	103628 104984	87.6 96.19	99250
FPR17FT226 and FPR17FT222	105749	104038	A-c governed series	73106	35	71974	7	7105	10	368 *404	2,102 2,308	103628 104984	87.6 96.19	99250
FPR5GB	110846	6708	A-c governed series	73106	35	71974	7	7105	10	368 *404	2,102 2,308	103628 104984	87.6 96.19	99250
FPR21H226, FPR21H222, FPR23H226, and FPR23H222	86933	82283	A-c synchronous	78509	30	78510	7			368	1,800			
FPR21GB226, FPR21GB222, FPR23GB226, and FPR23GB222		102969	A-c governed series	78509	30	78510	7	93903	35	368	1,800	103628	87.6	
FPR21GB226, FPR21GB222, FPR23GB226, and FPR23GB222	106174	6708 or 107151	A-c governed series	73106	35	71974	7	7105	10	368 *404	2,102 2,308	103628 104984	87.6 96.19	99250

*Speed for interoperation with British (Creed) equipment.

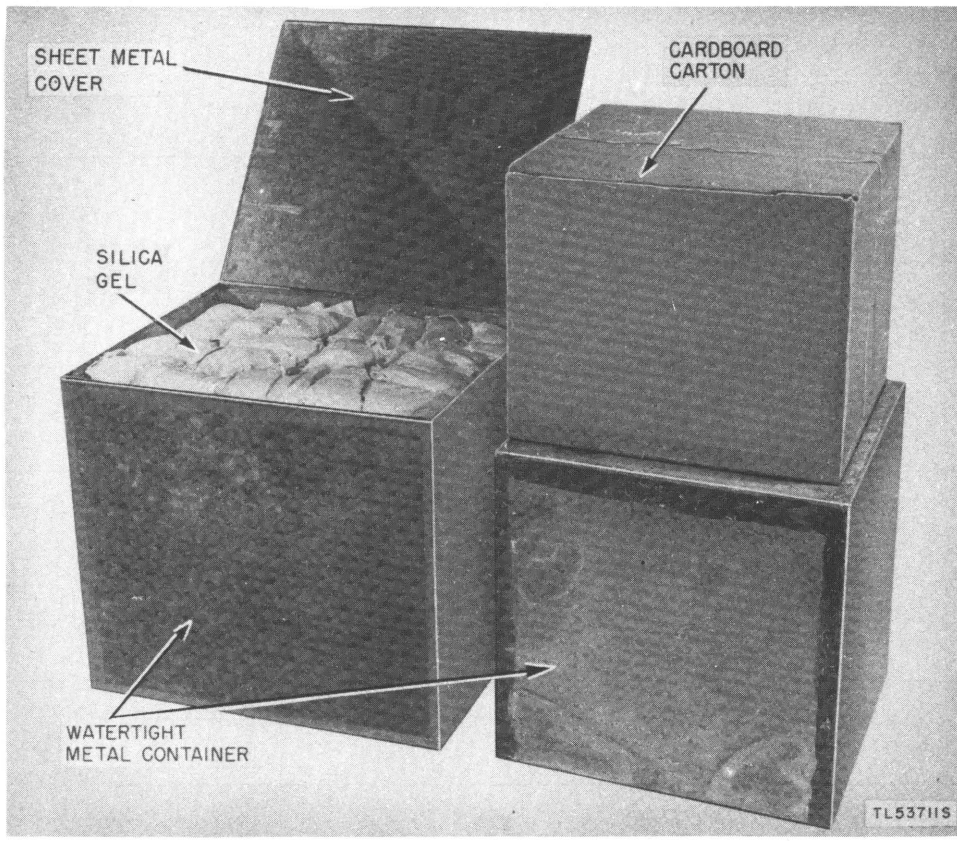

Figure 15. Typical packaging for export shipment.

furnished below was obtained from particular shipments and may be used as a guide.

Note. Items may be packaged in a different manner from that shown depending upon supply channels.

c. A watertight metal container, similar to the container shown in figure 15, protects the equipment when packed individually or when several units are packed in one box. As a further protection against moisture and possible rusting of the equipment, bags of silica gel (dessicant) are placed inside the water tight metal containers. Moistureproof-vaporproof barrier of special, heavy, foil-lined paper furnishes further protection for the equipment after it is placed in a cardboard carton.

Section II. APPLICATION

9. General

a. The model 14 typing reperforator, which is a major component of many teletypewriter sets, may be used as follows:

(1) To receive messages.

(2) To monitor messages being received or transmitted by other teletypewriter equipment in the same circuit.

(3) To send messages.

b. Model 14 typing reperforators record the message both in type and in code perforation which permits a check of the text of the message and rapid retransmission by transmitter distributor if relay of the message is desired.

c. Since the model 14 typing reperforator has no remote control motor stop feature, it is not

suitable for operation with equipment using remote control but may be used in any other type of teletypewriter circuit.

Note. Page-printing teletypewriters with communication keyboards (Printer TG–7–A, Teletypewriters TG–7–B, TT–5/FG, TT–7/FG, etc.) stop when FIGS and H keys are operated in that order. Page-printing teletypewriters with weather keyboards (Teletypewriters TG–37–B, TT–6/FG, TT–8/FG, etc.) stop when FIGS, BLANK, and H keys are operated in that order.

d. Model 14 typing reperforators, like other teletypewriter equipment used by the Army, are wired for neutral operation. Model 14 typing reperforators may be operated on polar circuits by working through repeaters such as Repeater TG–30 (Terminal, Telegraph) or by making minor wiring changes. (See par. 130.)

Note. Except in emergencies where break-down of the regular power supply makes polar operation necessary, polar operation directly to the typing reperforator is not recommended for Army use.

10. Use as Part or Reperforator Transmitters TG–26–A and TG–27–A (fig. 16)

a. The model 14 (FPR17) sending-receiving typing reperforator and a transmitter distributor are the main components of Reperforator Transmitters TG–26–A and TG–27–A. The FPR17 typing reperforator furnishes the means for sending and receiving messages and for recording messages for retransmission at high speed.

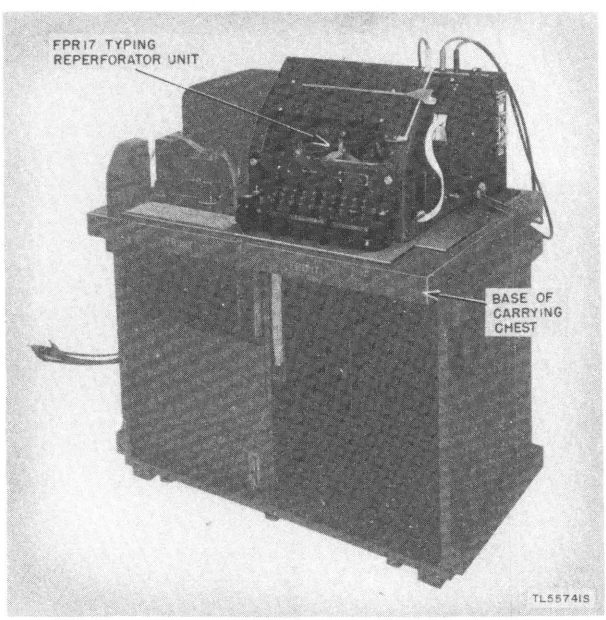

Figure 16. Model 14 (FPR17) typing reperforator, part of Reperforator Transmitters TG—26—A and TG—27—A.

b. Reperforator Transmitters TG–26–A and TG–27–A are design for field use but also may be used in fixed plant circuits similar to circuits using 132 and 133 teletypewriter sets.

c. Refer to TM 11-2201 for further information concerning Reperforator Transmitters TG–26–A and TG–27–A, components of Reperforator Teletypewriter Sets TC–16 and TC–17.

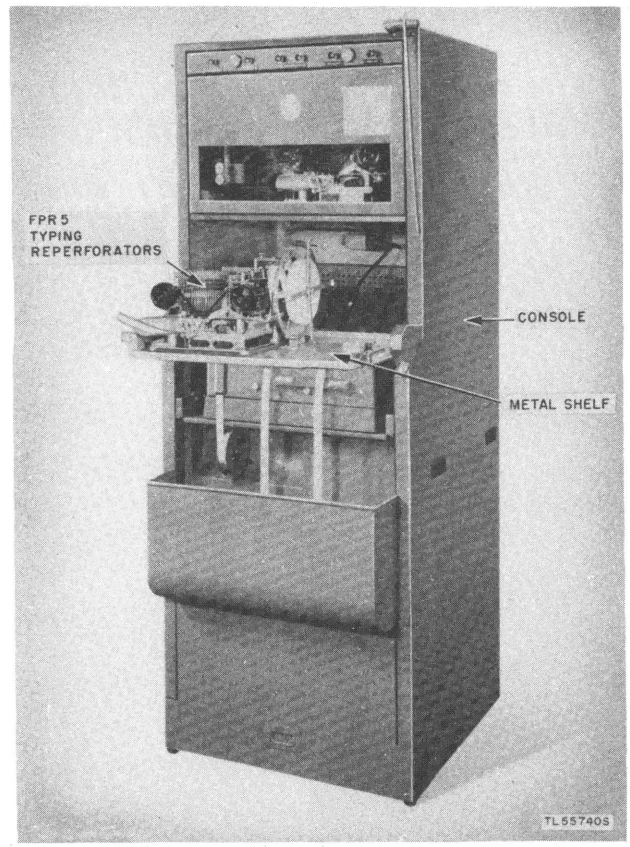

Figure 17. Model 14 (FPR5) typing reperforator, part of Teletypewriter Set AN/TGC—1.

11. Use as Part of Teletypewriter Set AN/TGC–1

a. The FPR5 typing reperforators used with Teletypwriter Set AN/TGC–1 provide the means for receiving and recording messages at

Figure 18. Model 14 (FPR21) typing reperforator, part of 132 and 133 teletypewriter sets.

high speed. This equipment is normally used in signal centers or tape relay stations where large amounts of traffic are handled. While one reperforator receives messages from a distant station, the other reperforator may be used to monitor outgoing messages which are transmitted by a transmitter distributor within the set.

b. Refer to TM 11–2203 for information concerning the use of the FPR5 typing reperforator as part of Teletypewriter Set AN/TGC–1.

12. Use as Part of 132 and 133 Teletypewriter Sets (fig. 18)

a. As part of 132 and 133 teletypewriter sets, the model 14 (FPR21) typing reperforator furnishes the means for receiving and recording for retransmission at high speed, messages from radio teletype circuits, from other 132 and 133 teletypewriter sets, or from code room circuits using 131 teletypewriter sets.

b. Refer to TM 11–2210 for information concerning 132 teletypewriter sets and to TM 11–2211 and TM 11–2214 for information concerning 133 teletypewriter sets.

13. Use as Monitor for Teletypewriters TT–7/FG and TT–8/FG and Other Model 19 Teletypewriter Sets (fig. 19)

a. The model 14 (FPR23) typing reperforator is not part of Teletypewriters TT–7/FG and TT–8/FG but is used with this equipment and other model 19 teletypewriter sets as a monitor. The model 14 (FPR23) typing reperforator records all messages transmitted or received on the circuit either for record purposes or for retransmission.

b. The model 14 (FPR23) typing reperforator also may be used to receive urgent messages

Figure 19. Model 14 (FPR23) typing reperforator used as monitor for Teletypewriters TT—7/FG and TT—8/FG and other model 19 teletypewriter sets.

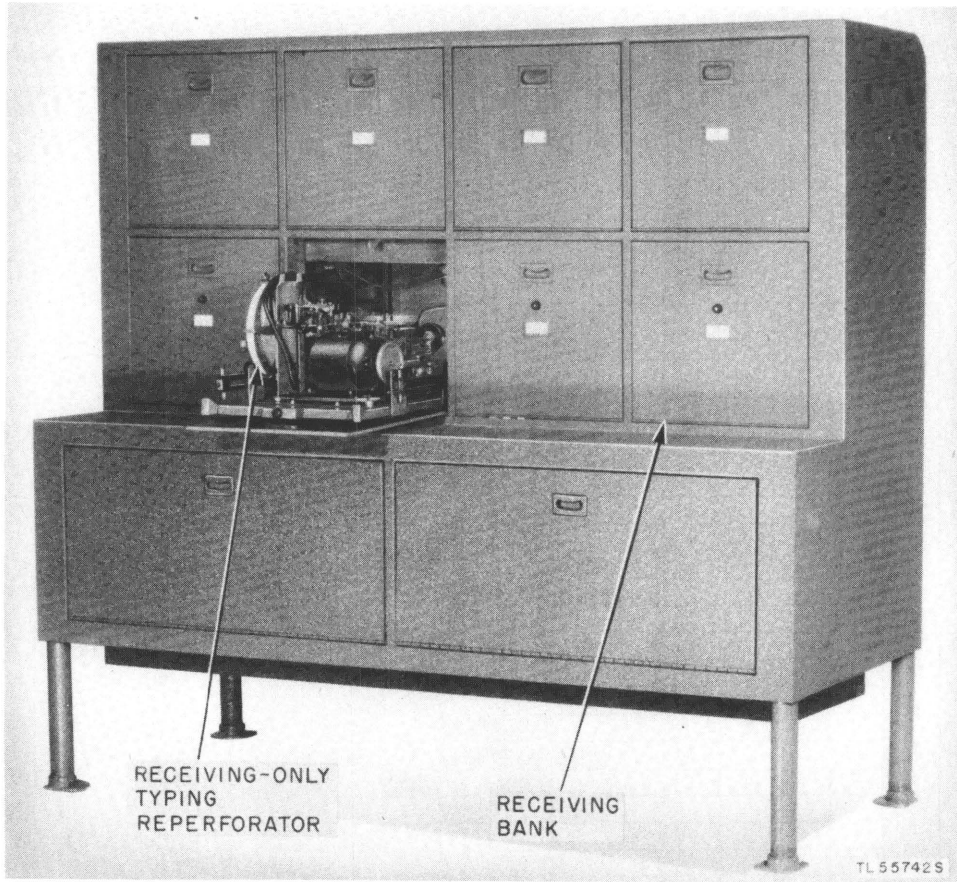

Figure 20. Example of a receiving bank.

on one circuit when the associated teletypewriter equipment is operating on another circuit or is otherwise unavailable.

c. Refer to TM 11–2216 for information on Teletypewriters TT–7/FG and TT–8/FG.

14. Use with Other Teletypewriter Systems

Typing reperforators may be used in many other teletypewriter systems where large volumes of traffic must be handled. The particular installation involved will determine what type of equipment is used and how it is to be connected. Typical of such cases is the use of several receiving-only typing reperforators grouped together to form a receiving bank. Generally the receiving-only typing reperforators will all be mounted in a console which contains the necessary wiring, relays, rectifiers, etc., for a teletypewriter terminal. The incoming circuits terminate at the console and the internal wiring is arranged to connect a receiving-only typing reperforator to each individual circuit. An example of a receiving bank as used in a semiautomatic tape relay station is shown in figure 20. Refer to TM 11–2212 for information on semiautomatic tape relay installations.

15. General Functioning of Equipment

The general functioning of all model 14 typing reperforators is the same regardless of the power supply or type of equipment with which the model 14 is operated. All model 14 typing reperforators receive start-stop five-unit teletypewriter code impulses. Model 14 typing reperforators equipped with keyboards transmit five-unit start-stop teletypewriter code impulses.

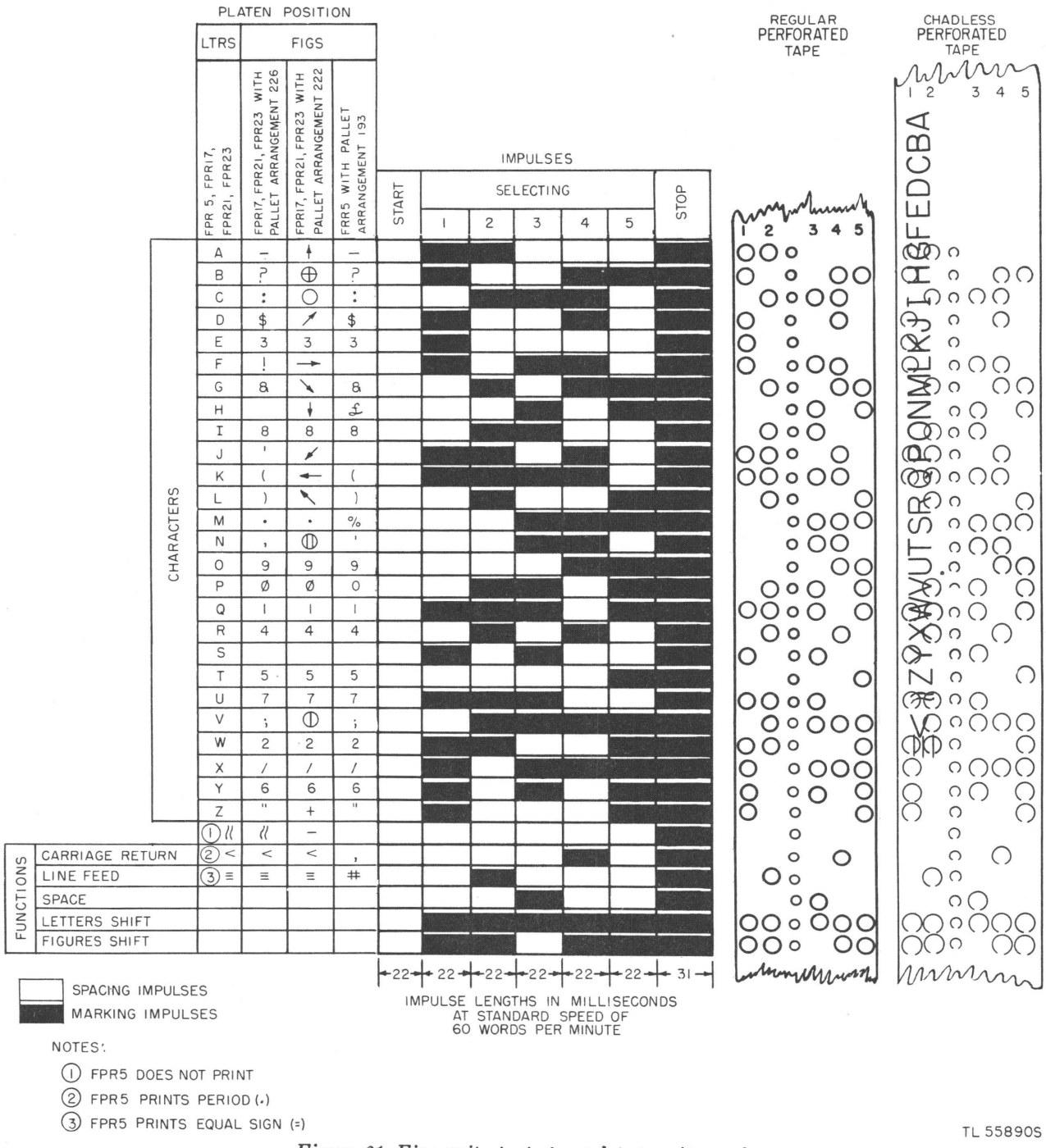

Figure 21. Five-unit start-stop teletypewriter code.

16. Five-Unit Start-Stop Teletypewriter Code

All typing reperforators operate by receiving the five-unit start-stop teletypewriter code impulses. Typing reperforators equipped with keyboards also transmit these code impulses. The teletypewriter code used to transmit messages between typing reperforators (and other

teletypewriter equipment) consists of five selecting impulses used in various combinations of current (marking) and no-current (spacing) impulses. Each group of five selecting impulses is preceded by a start impulse which is always a spacing impulse and is followed by a stop impulse which is always a marking impulse. These start and stop impulses are used to keep the sending and receiving teletypewriter equipment in step (synchronism) as described in paragraph 18. Figure 21 illustrates the relationship between the keyboard symbols, the code impulses, and the perforations and typing on the tape produced by the typing reperforator.

17. Functioning of Transmitting and Receiving Mechanisms

a. TRANSMITTING MECHANISM (FIG. 22). The sending contacts in the transmitting mechanism on the sending-receiving base, on which the FPR17 typing reperforators are mounted, are controlled by the keyboard. When a keylever on the keyboard is depressed, a combination of the sending contacts open and close the signal line in succession to produce impulses corresponding to the teletypewriter code.

b. RECEIVING MECHANISM (FIG. 23). The selector magnet in the receiving mechanism is controlled by the code impulses received from a transmitting mechanism and translates the impulses into related mechanical movements of certain parts. The selection of a particular combination of positions for these parts determines the code perforations to be punched in the tape and the character to be printed on the tape. The electrical impulses received by the selector magnet may come from either the transmitting mechanism on the sending-receiving base on which the typing reperforator is mounted or from other teletypewriter equipment to which the typing reperforator is connected by wire or radio circuits.

18. Synchronism

The motor unit, which provides the typing reperforator with the mechanical power required to operate various parts in the transmitting and receiving mechanisms, is also used to keep interconnected typing reperforators and other teletypewriter equipment in synchronism. All typing reperforators equipped with the same type of gear combination and motor can be adjusted to operate at the same average speed. Figure 24 shows the motor governor, which controls the speed of the typing reperforator within very close limits. Synchronous motors always operate at a definite speed. The

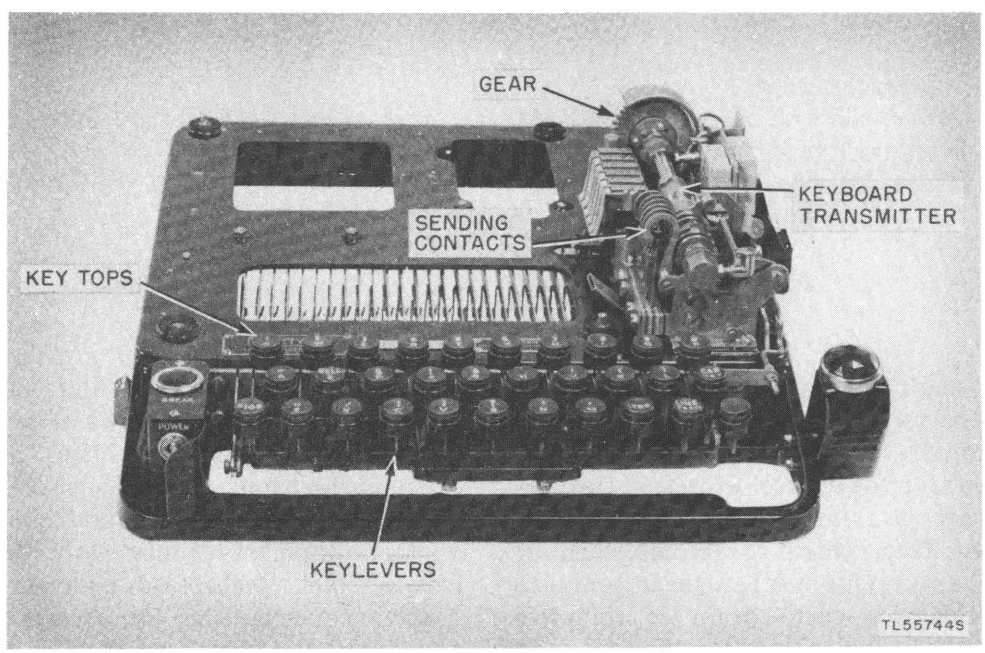

Figure 22. Transmitting mechanism.

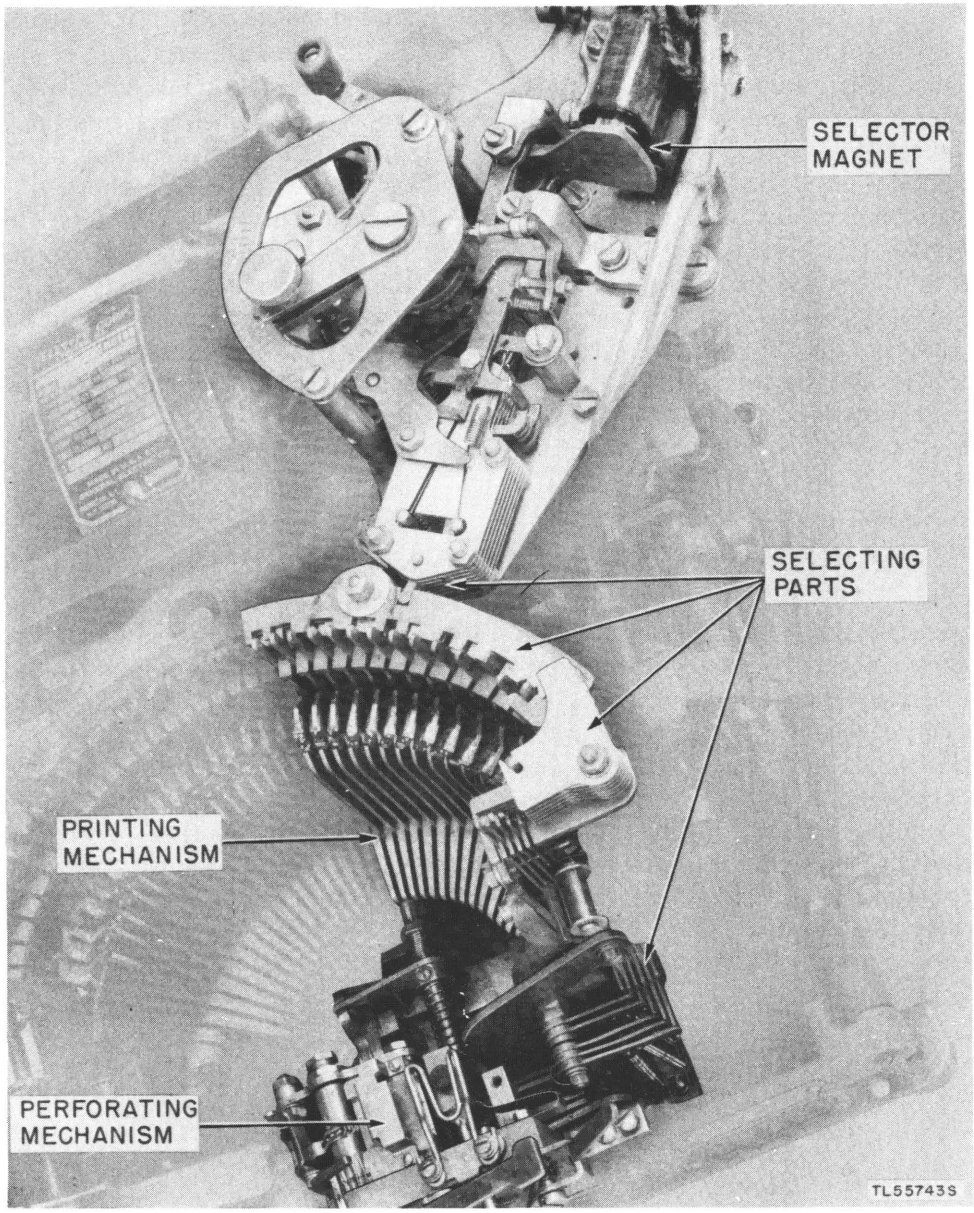

Figure 23. Receiving mechanism.

remaining small differences in speed could still cause the receiving mechanism to get out of step gradually with the transmitting mechanism, except for the control exercised through the start and stop impulses in the teletypewriter code. This control is accomplished by designing the receiving mechanism to complete one revolution for each group of impulses quickly enough to have time to *stop* and wait for the next start impulse. Small variations in speed cause the receiving mechanism to wait only a few thousandths of a second more or less than the normal waiting period before the next start impulse. This arrangement keeps all typing reperforators and other teletypewriter equipment connected in the same circuit in exact synchronism by insuring that the receiving mechanisms are always in the right position at the beginning of *each* group of five selecting impulses.

Section III. ASSEMBLY AND DISASSEMBLY

Note. The information in this section is intended to present the unpacking procedures applicable to the several packing arrangements currently in use. The different arrangements encountered will depend upon whether the equipment has been packaged for oversea shipment, packed for domestic (other than oversea) shipment, or simply arranged in the carrying chests (in the case of the FPR17 typing reperforator) for transportation and storage by the using organization.

19. Unpacking Overseas Packing Cases

a. GENERAL. Be careful when unpacking and handling the equipment. It may be damaged easily when not protected by the packing case. Follow the steps outlined in *b* below when unpacking the equipment.

Caution: Don't unpack in a location where the equipment will be exposed to rain, snow, or mud. Such exposure may require a complete overhaul of the equipment before it can be put into operation, or may render it useless.

b. STEP-BY-STEP INSTRUCTIONS FOR UNPACKING EXPORT SHIPMENTS (FIGS. 15 AND 25).

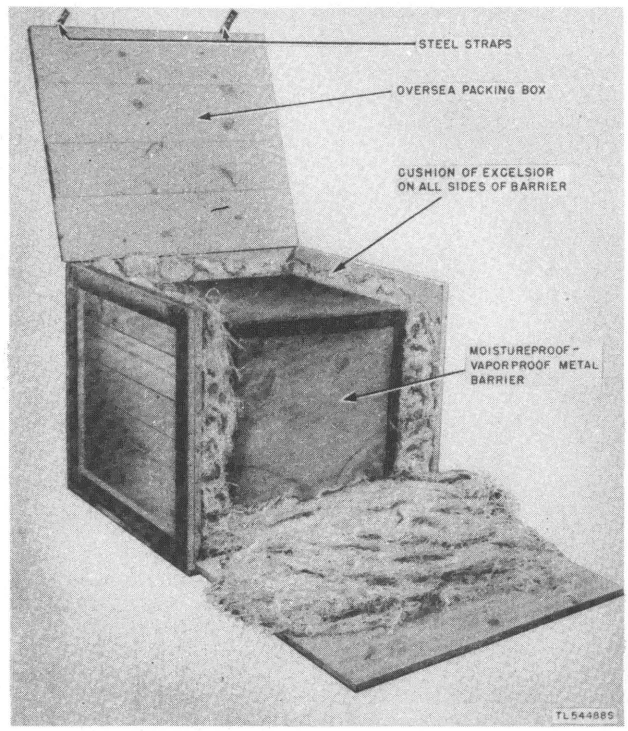

Figure 25. Typical arrangement of metal container in wooden case.

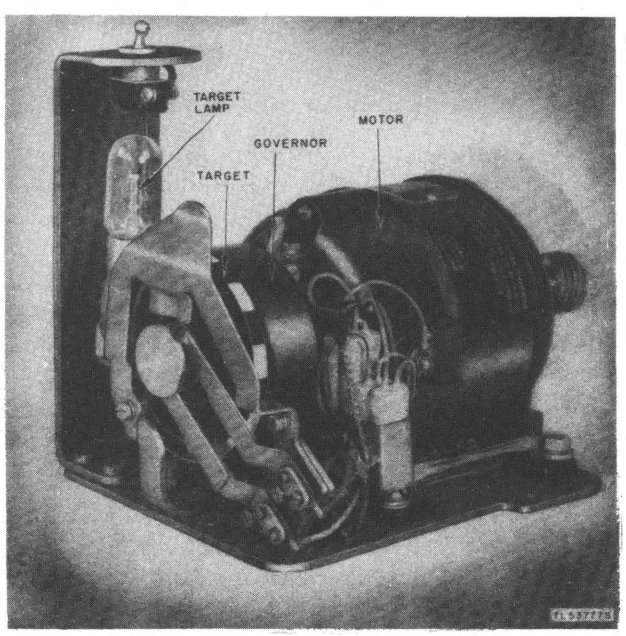

Figure 24. Governor end of motor unit.

(1) Place the packing case as near the operating position or workbench as convenient.

(2) Cut and fold back the steel straps.

(3) Remove the nails, using a nail puller, and remove the top and one side of the packing case. *Prying off the sides and top may result in damage to the equipment.*

(4) Remove the waterproof metal container or the moistureproof barrier and any corrugated paper covering the equipment inside the case. See *d* below for instructions on opening the waterproof metal container.

Caution: When removing waterproofing and other protective wrappings, do not remove any moistureproofing and fungiproofing coatings.

(5) Remove the equipment from its inner case and place on the workbench or near its final location.

(6) Thoroughly inspect the equipment for possible damage during shipment.

807975 O - 48 - 3

(7) Check the contents of the packing case against the master packing slip.

c. OPENING CARDBOARD CARTON AND WATERPROOF PAPER BARRIER. No special instructions are required for opening the waterproof paper barrier and removing the equipment from the cardboard carton. A typical waterproof paper barrier is shown in figure 29.

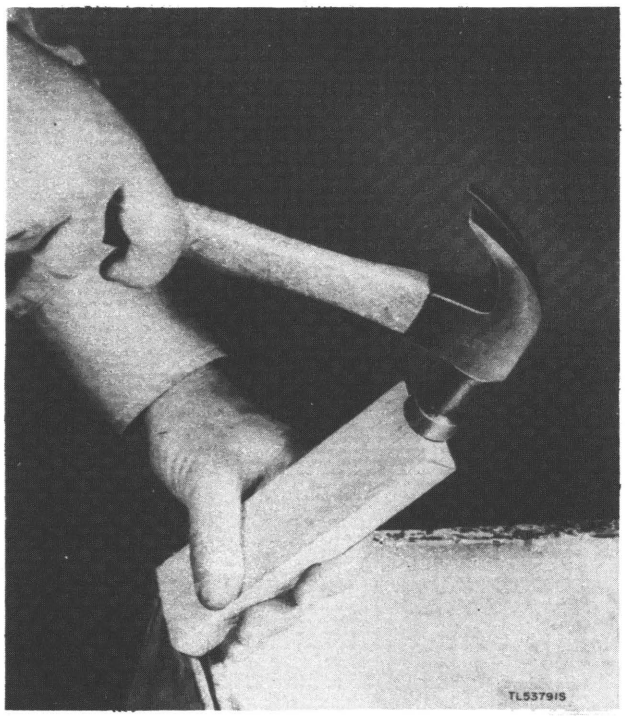

Figure 26. Opening metal container, using wooden block.

Figure 27. Opening metal container, using screw driver.

d. INSTRUCTIONS FOR OPENING SHEET-METAL CONTAINERS (FIGS. 26 AND 27). The sheet-metal container is sealed by soldering the top to the sides. To open, the soldered seam is broken by prying the side of the container away from the soldered seam, as follows:

(1) Wipe off excess solder with a soldering iron. Do not use a torch as contents of the container are inflammable.

(2) With a wooden block or a screw driver (figs. 26 and 27) pry the side from the soldered seam.

(3) After the soldered seam is opened completely, pry off the cover.

(4) After the bags of dessicant and protective cardboard packing are removed from the top, lift or draw out the unit packages.

20. Unpacking Domestic Packing Cases

a. Typing reperforators packed for domestic (other than oversea) shipment may be received in shipping cases similar to the one shown in figure 28. Cut the metal straps and remove nails and cover as described in paragraph 19.

b. No special instructions are required to open the cartons used to protect the equipment. In some instances heavy packing paper may be used in place of the cartons shown in figure 28.

Note. Whenever practical, save the original packing boxes and cartons for use in future local shipments or shipments to higher echelon repair shops.

21. Assembly

a. GENERAL. (1) No assembly operations are required for the new model 14 (FPR17) typing reperforators, part of Reperforator Transmitters TG–26–A and TG–27–A, because the equipment is permanently mounted on the chest base during manufacture.

(2) The replacement model 14 (FPR17) typing reperforator is assembled in the same manner used to assemble model 14 (FPR21 and FPR23) typing reperforators ((4) and *b* below) except that the base mentioned in *b* (1) below is bolted to a chest with the mountings furnished for that purpose.

(3) FPR5 typing reperforators require no special instructions for assembly. After the reperforator is unpacked, it is placed on a metal shelf in the console housing the complete teletypewriter set. Should the FPR5 typing reperforator be shipped partially dismantled, follow the applicable instructions given in *b* below.

(4) Model 14 (FPR21 and FPR23) typing reperforators generally are packed in four boxes. To assemble the typing reperforator, first remove the reperforator unit, base, cover, and table (when used) from their respective packing cases.

b. STEP-BY-STEP INSTRUCTIONS FOR ASSEMBLING FPR21 AND FPR23 TYPING REPERFORATORS. (1) Place the reperforator base on the reperforator table or on the associated equipment table.

(2) Fasten the reperforator unit on the base. Make sure that the reperforator is fully seated on the base.

(3) Mount the tape container on the right-hand side of the base and fasten it with the two screws provided for this purpose. In mounting the tape container be careful not to bend the tape-out lever.

(4) Install the ribbon. (See par. 30.)

(5) Lower the cover of the assembled reperforator.

(6) Lift up the front of the cover.

(7) Install a roll of tape. (See par. 31.)

(8) Lower the cover.

Note. In prescribing the above assembly procedure, it is assumed that the typing reperforator was in normal working order when it was packed for shipment. When the exact condition of the equipment is not known complete the checks, adjustments, and repairs listed in paragraph 22 before completely assembling the reperforator.

22. Physical Checks and Adjustments

a. At the time the equipment is being unpacked and assembled, and in all cases before the typing reperforator is connected to other equipment, check the following:

(1) General physical condition of entire reperforator to determine that no damage occurred during shipment. (When damaged apparatus is received, if possible complete the repairs in accordance with instructions in part five, otherwise return the equipment for replacement as directed by the local commander.)

(2) Entire typing reperforator to determine that no excelsior or other packing material has entered the moving parts. (Refer to par. 34*e* and 134 for instructions on cleaning, when necessary.)

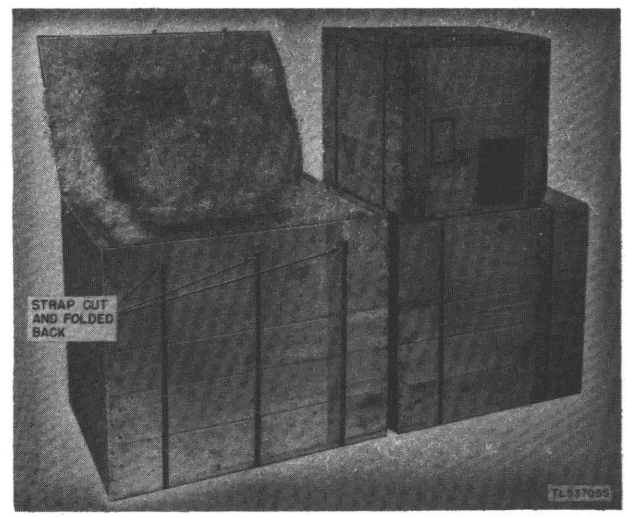

Figure 28. Typical packing case for domestic shipments.

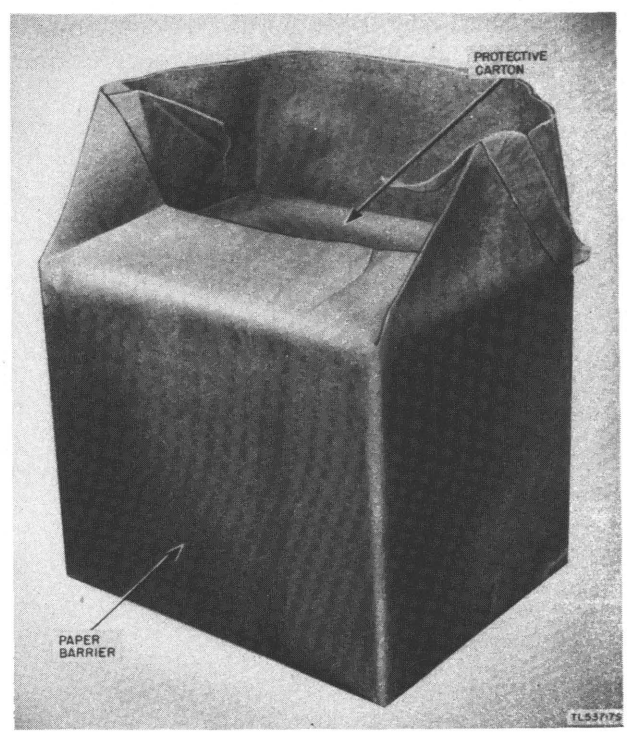

Figure 29. Typical waterproof paper barrier.

(3) All mechanical parts for lubrication. (Refer to section VII for lubrication instructions.)

(4) Motor, fuse, switches, cords, and plugs to make sure that all connections and moving parts are in satisfactory condition. (Refer to part three and part five for additional information.)

Note. All section and part references refer to the numbered sections and parts in book 1.

b. At least one teletypewriter ribbon will be furnished with each typing reperforator. Refer to paragraph 30 for instructions on placing new ribbons.

c. Normally, tape is not supplied as part of model 14 typing reperforator but will be furnished in varying quantities with other parts of teletypewriter sets and systems. (Refer to par. 31 for instructions on installing tape.)

23. Disassembly and Repacking

a. The new model 14 (FPR17) typing reperforator, part of Reperforator Transmitters TG–26–A and TG–27–A, is not disassembled for packing; the complete chest is packed in one box. See TM 11–2201 for repacking instructions.

b. To disassemble the replacement model 14 (FPR17) typing reperforator and the model 14 (FPR21 and FPR23) typing reperforators, proceed as follows:

(1) Remove all external wiring and cord connections.

(2) Remove the cover.

(3) Remove any tape remaining in the tape slide by operating the backspace lever and pulling the tape to the right.

(4) Remove the tape container.

(5) Remove the typing reperforator unit by removing the two thumbscrews and lifting the reperforator straight up.

(6) Lift the base from the reperforator table or associated equipment table.

c. The repacement model 14 (FPR17) typing reperforator for use with Reperforator Transmitters TG–26–A and TG–27–A, and model 14 (FPR21 and FPR23) typing reperforators should be repacked in the original individual boxes, if possible. If the original boxes are not available, use a suitable cardboard box or wrap with heavy wrapping paper similar to the waterproof barrier shown in figure 29. Before boxing or wrapping the typing reperforator, bolt it to a wood pallet which will extend about 1 inch on all sides. Place the boxed or wrapped equipment in a strong wooden box and cushion with excelsior or similar material to prevent shifting of the equipment. The excelsior should be at least 3 inches thick between the sides of the box and all parts of the equipment. Securely nail the cover on the box and strap with metal tape or strong wire.

d. Mark clearly on the outside of the box containing repacked equipment: the equipment contained, condition of the equipment, and whether or not the equipment has been moistureproofed and fungiproofed. Obliterate all marks on the box that do not apply to the contained equipment.

PART TWO

OPERATING INSTRUCTIONS

Note. For information on destroying this equipment to prevent enemy use, see the destruction notice at the front of this manual.

Section IV. CONNECTIONS, PREOPERATIONAL ADJUSTMENTS, AND TESTS

24. Connections

a. WIRING AND CORD CONNECTIONS FOR MODEL 14 TYPING REPERFORATORS. (1) In general, wiring and cord connections for model 14 typing reperforators consist of plugging the various plugs into suitable receptacles on equipment tables; all the intricate wiring connections are made at the factory. Usually each receptacle is marked to show which cord is plugged into it. Where no markings appear on the equipment tables, refer to the wiring diagram for the particular equipment involved.

(2) In addition to the cords furnished with receiving-only typing reperforators (a power cord and a cord equipped with a red shell plug) sending-receiving typing reperforators have a cord terminating in a black shell plug which is used to make connections to the sending circuit of the reperforator.

b. CONNECTIONS FOR MODEL 14 (FPR17) TYPING REPERFORATORS. (1) The new model 14 (FPR17) typing reperforator, part of Reperforator Transmitters TG–26–A and TG–27–A, is completely wired to the associated equipment at the factory. No additional wiring is required except the plugging of the reperforator signal cord into one of the signal circuit jacks (line or local) in the associated equipment jack box.

(2) For information on connecting a replacement model 14 (FPR17) typing reperforator, see paragraph 129.

c. CONNECTIONS FOR MODEL 14 (FPR5) TYPING REPERFORATOR. The Model 14 (FPR5) typing reperforator, part of Teletypewriter Set AN/TGC–1, is equipped with a power cord and a circuit cord. Receptacles for the two cords are mounted in jack boxes permanently fastened to the interior of the console housing the entire teletypewriter set. Refer to TM 11–2203 for information on the connections necessary for the model 14 (FPR5) typing reperforator.

d. CONNECTIONS FOR MODEL 14 (FPR21 AND FPR23) TYPING REPERFORATORS. Model 14 (FPR21 and FPR23) typing reperforators, used as part of fixed plant equipment, normally are packed as separate complete units. All circuit connections between the typing reperforators and its base on the associated equipment are made automatically when the typing reperforator is fastened in position on its mounting plate.

Note. All other wiring and connections are made on the associated equipment. See technical manuals on associated equipment for connection information.

25. Power Supply

a. GENERAL. (1) Ordinarily power for the reperforator motor and signal circuit is furnished through the associated equipment with which the model 14 typing reperforator is designed to operate. For information on the various types of power supplies that may be used, see the installation procedures in the technical manuals for the associated equipment.

(2) The motors furnished with typing reperforators are designed to operate either on ac or dc at specific voltages (and frequencies in the case of ac). However, when the available power supply and the motor nameplate data differ, the motor may be connected to the power supply through a multiple-voltage, multiple-frequency rectifier or other voltage-adjusting equipment, usually furnished with the associated equipment.

(3) Table V is a summary of the types of motors supplied with typing reperferators and the power sources on which the associated equipment operates.

Table V. Motor types and power sources.

Typing reperforator unit	Associated equipment	Power source*	Motor unit supplied
FPR 5	Teletypewriter Set AN/TGC—1	110-120 volt ac or dc	Synchronous Governed series
FPR 17	Reperforator Transmitters TG—26—A and TG—27—A	115-volt ac 25- or 40-cycle, 115-volt dc, 115-volt ac 50- or 60-cycle	Governed series
FPR 21	132 and 133 teletypewriter sets	95- to 250-volts 25- to 60-cycle one-phase ac, 105- to 125-volt dc	Synchronous Governed series D-c shunt
FPR 23	Model 19 teletypewriter sets	115-volt ac 25- to 60-cycle, 115-volt dc	Synchronous Governed series

*This refers to the power source of the associated equipment, not the actual voltage supplied to the typing reperforator.

b. MODEL 14 (FPR17) TYPING REPERFORATOR. The motor of the typing reperforator used as part of Reperforator Transmitters TG–26–A and TG–27–A is designed for operation on 115-volt, 50- to 60-cycle ac. The three-position switch mounted on the associated equipment connects resistors into the motor and control circuits to permit operation on 115-volt dc and 115-volt, 25- to 40-cycle ac, in addition to the power mentioned above. Be sure to throw the three-position switch to the position matching the local power supply *before* connecting the power cords. Power connections during repair are discussed in section XIV and illustrated in figure 93.

c. MODEL 14 (FPR5, FPR21, AND FPR23) TYPING REPERFORATORS. The type of motor supplied with typing reperforators used with fixed plant equipment varies with the type of power source to which the associated equipment is connected. (See table V.)

26. Grounding

Grounding of model 14 typing reperforators is not required because each typing reperforator is connected to ground (for protection of personnel against shock) through its associated equipment. Grounding of equipment during repair is discussed in paragraph 131.

27. Signal Circuit

The signal circuit, like the ground connection discussed in paragraph 26, is obtained from the associated equipment. The signal line does not connect to the typing reperforator directly except for emergency operation. For information on the various types of signal circuits that may be used, see the installation procedures in the technical manuals for associated equipment. Signal circuit connections during repair are discussed in paragraph 130.

28. Preoperational Checks and Adjustments

a. GENERAL. (1) All typing reperforators are adjusted properly at the factory before being packed for shipment. However, before putting either new or used equipment in operation, inspect the equipment and, if necessary, lubricate.

(2) Whenever definite information is not available on the condition of the equipment, make checks to be sure that one of the adjustments have shifted. Check the following items, and any other items observed to be in questionable condition.

b. MOTOR. Turn the motor by hand in the direction of normal rotation (counterclockwise when viewed at governor end). Be sure there is no bind or excessive backlash between the motor pinion and the main-shaft gear, or that there are no binds in other parts of the equipment. Readjust if necessary (refer to section XV). See paragraph 29 for motor speed test and adjustment.

Caution: Do not turn the motor backward (governor in clockwise direction). Reversing

the direction in which parts are designed to move may cause jamming or may break or otherwise damage parts.

c. CLUTCH LEVER CONTACTS (FPR21 ONLY). Turn the motor and check to see that the clutch lever contacts close when the sixth cam completes each revolution. Readjust if necessary. (See par. 352.)

d. TAPE-FEED PAWL. Turn the motor and check to see that the tape-feed pawl engages and turns the tape-feed roll. Readjust if necessary. (See par. 290.)

e. RIBBON-REVERSE SHAFT. Make sure the ribbon-reverse shaft is fully engaged with one of the ribbon-feed shafts.

f. TAPE REEL. See that the tape reel is free on its axis and that the tape feeds properly.

g. TAPE-FEED MECHANISM. Insert a piece of perforated tape in the typing reperforator. Turn the motor by hand in the direction of rotation (counterclockwise) and observe whether the tape advances one full row of perforations for each complete turn of the main shaft. If the tape moves either more or less than one full row of perforations, readjust to meet the requirements given in paragraph 289.

29. Checking and Adjusting Motor Speed

a. GENERAL. (1) Typing reperforators used with fixed plant teletypewriter equipment usually are equipped with governed series motors which require adjusting but may be equipped with synchronous motors that do not require adjusting. Reperforators used with tactical teletypewriter equipment generally are equipped only with governed series motors which must be adjusted to operate at definite speeds. The motors of all teletypewriter sets in the same circuit or net must be set to operate at the same speed before satisfactory operation is possible.

(2) The speed of the motor may be checked by the use of a tuning fork (speed indicator) and target. The governor, mounted on the end of the motor shaft, similar to a flywheel, uses centrifugal force to open a set of contacts connected in the motor circuit, and thus controls the normal operating speed of the motor. The normal speed of the motor may be varied by means of an adjusting bracket and an adjusting lever which turn the speed-adjusting wheel extending through an opening in the face of the governor. A breaking or making action of the governor contacts takes place and the speed of the motor varies accordingly. Detailed functioning of the governor is explained in section XI and wiring diagrams for the complete typing reperforator include diagrams of the motor circuit.

b. DESCRIPTION OF TARGET AND TUNING FORK. A target of alternate black and white spots is painted around the outer rim of the governor and is used with a speed indicator (tuning fork) to check the motor speed visually. Although the number of spots on a target varies, the method of using the target in checking and setting the motor speed remains the same. Tuning forks, made of flexible metal and equipped with a slit shutter on one end, are constructed to vibrate at certain speeds. By striking the side of the tuning fork against the hand the shutter is made to vibrate. By holding the slit on the shutter close to the eye the spots on the target may be viewed through the slit. This is called *scanning*. When the proper fork for a given motor speed is used for scanning, the spots on the target will appear to be motionless or moving slowly in the same direction in which the governor is turning. The 87.6-cycle tuning fork normally is used when adjusting the motor speed.

c. CHECKING AND ADJUSTING GOVERNED SERIES MOTORS WITH TARGET AND TUNING FORK. There must be illumination on the target while using it to check and adjust motor speed. If a target lamp is not mounted behind the motor, a source of illumination such as a flashlight must be rigged in such a manner that a steady light will shine on the target. Before attempting to adjust the speed of the motor, allow the motor to run from 3 to 5 minutes. Adjust the motor while idling and, after the proper speed is obtained, check the speed while the motor is operating under a normal load condition. To provide a normal load (operating) condition, depress the space bar and hold it down (if a keyboard is used) or receive a test message from other teletypewriter equipment. There should be no great variation in the two speeds. To check and set the motor speed, proceed as follows:

(1) Using the 87.6 vibrations per second (vps) tuning fork, strike it against the palm of the hand to start it vibrating.

(2) Scan the target, holding the tuning fork as close to the eye as is necessary to view the target.

(3) Adjust the speed, by means of the adjusting bracket and lever, until the target as viewed through the tuning fork appears to stop. The motor is then synchronized at its proper speed.

(*a*) If the spots on the target appear to be moving in the same direction in which the motor is turning, the speed is too fast. Decrease the speed by *momentarily pressing and releasing* the governor adjusting bracket. (See fig. 30.)

(*b*) If the spots on the target appear to be moving in an opposite direction from which the motor is turning, the speed is too slow. Increase the speed by *momentarily pressing and releasing* the speed-adjusting lever. (See fig. 30.)

Note. Because it is difficult to adjust the governor so that the spots on the target appear to stand still, adjust the governor so that the spots appear to stop or to travel very slowly in the direction of motor rotation. If the spots appear to be jumping back and forth or to disappear suddenly, probably there is governor contact trouble.

(4) When the motor speed has been checked and adjusted, turn off the target lamp or remove the rigged target illumination.

Caution: There is a possibility of setting the speed incorrectly due to getting a speed multiple; that is, the speed could be half the desired speed, twice the desired speed, or some other multiple, but the spots would appear to be stationary when viewed through the fork shutters. Keep this in mind if trouble occurs due to incorrect speed.

d. SYNCHRONOUS MOTORS. The speed of synchronous motors depends upon the power supply and the speed of the synchronous motor will be correct for proper operation of the typing reperforator provided correct gears are supplied with the equipment. (See table IV.)

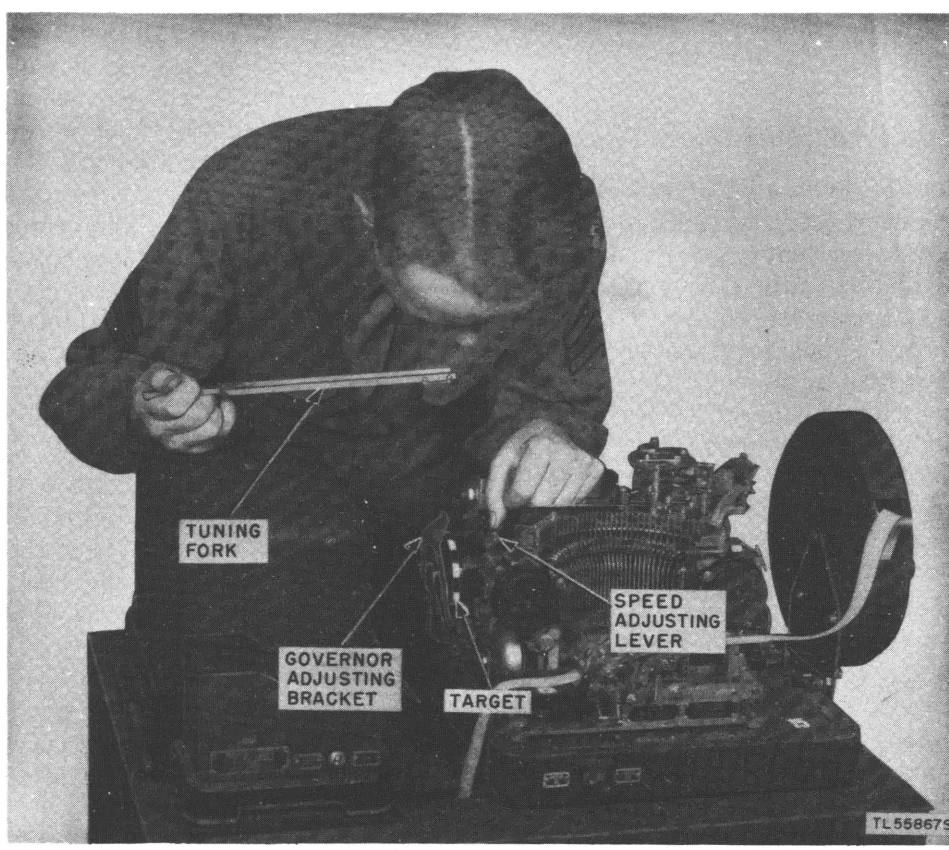

Figure 30. Checking and adjusting motor speed with target and tuning fork.

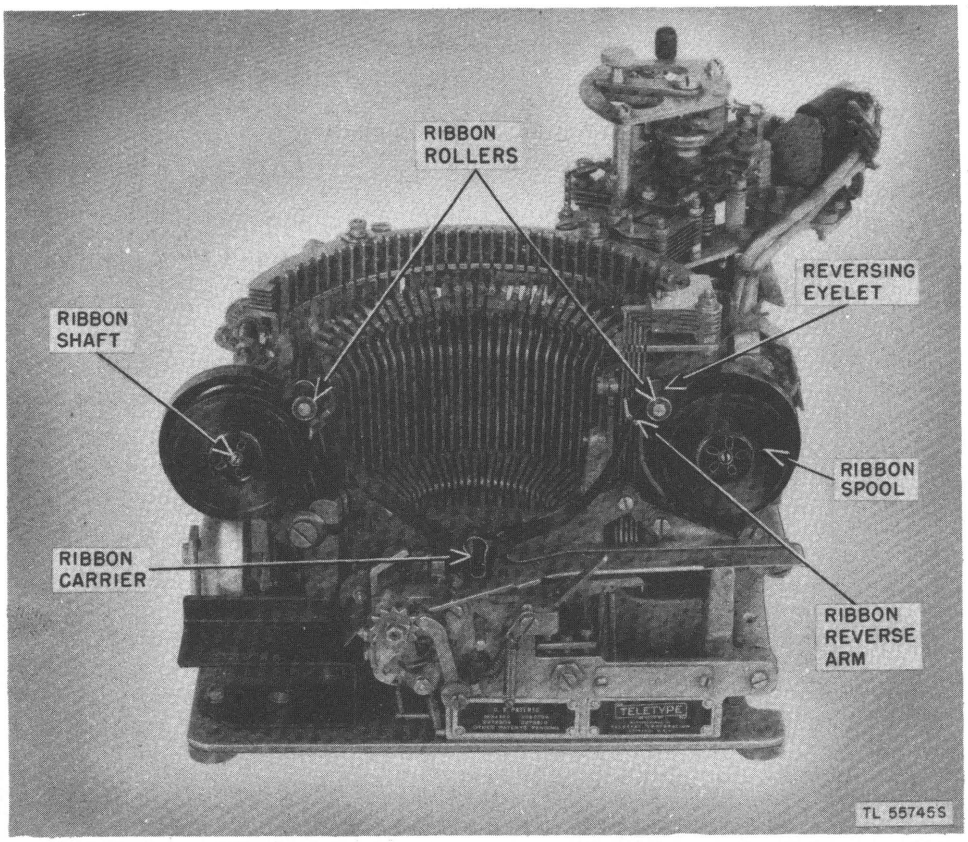

Figure 31. Installing ribbon in typing reperforator.

Therefore no check or adjustment of synchronous motors is necessary if correct gears are supplied with the equipment.

30. Installing Ribbon in Typing Reperforator

a. Make sure the new ribbon has a hook fastened to each end and a reversing eyelet securely fastened in the ribbon at each end about 4 inches from the hook. The spool may be either metal or fiber but it must have small holes placed around the center hole to engage the ribbon-spool driving pin on the ribbon-spool shaft.

b. Engage the hook of the ribbon in the hub of the empty spool and wind a few turns of ribbon on it. Be certain that the reversing eyelet has been wound onto the spool and covered by a few turns of the ribbon.

Note. The ribbon feeds from the bottom of the right spool to the bottom of the left spool, or vice versa. Therefore the hook should be engaged in such manner that the ribbon being wound on the empty spool will wind in the same direction as the ribbon unwinds on the full spool, similar to the threading of a typewriter.

c. Facing the machine, place the ribbon spools on the shaft so that the ribbon feeds from the bottom of the right spool to the bottom of the left spool without twisting. Turn each spool slightly on the shaft until the spool engages the driving pin on the ribbon-spool shaft.

d. Thread the ribbon forward around both ribbon rollers, through the slots in the ribbon-reverse arms, and across the ribbon carrier. (See fig. 31.) Be sure the ribbon remains in the slots and that both reversing eyelets are between the ribbon spools and the ribbon-reverse arms. Check to eliminate slack in the ribbon.

31. Installing Tape in Typing Reperforator

The procedure for the installation of a roll of tape in a typing reperforator will vary according to the type of equipment used. In general the following instructions will apply to the installation of tape in most typing reperforators.

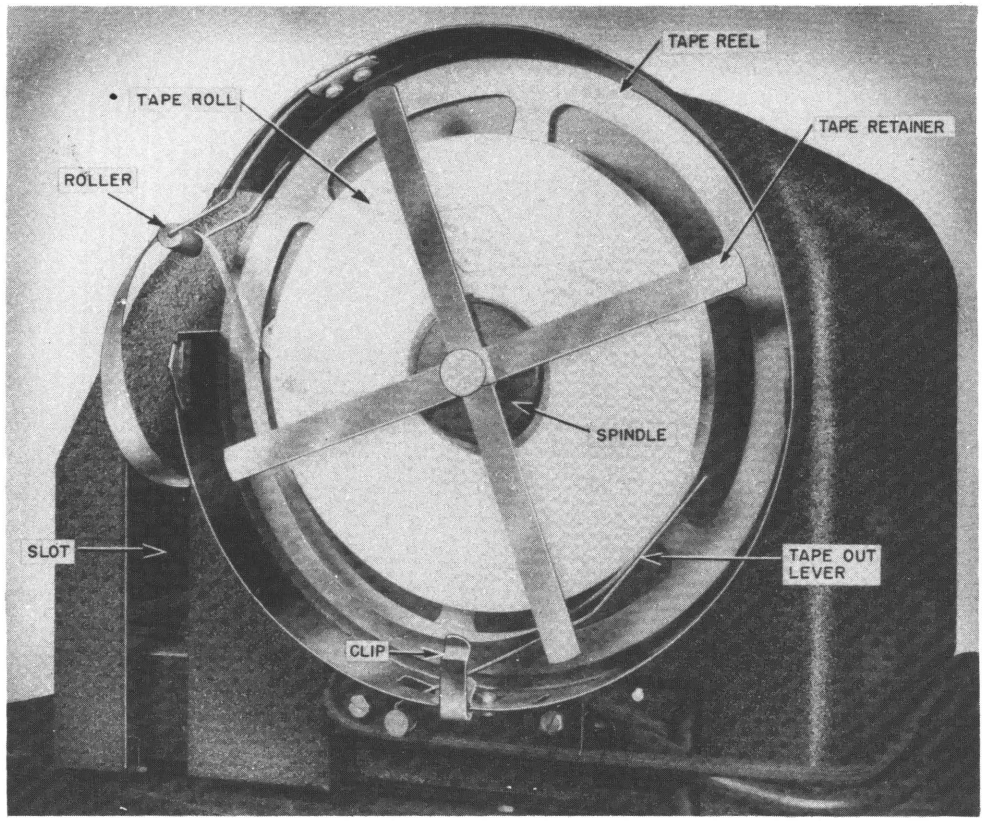

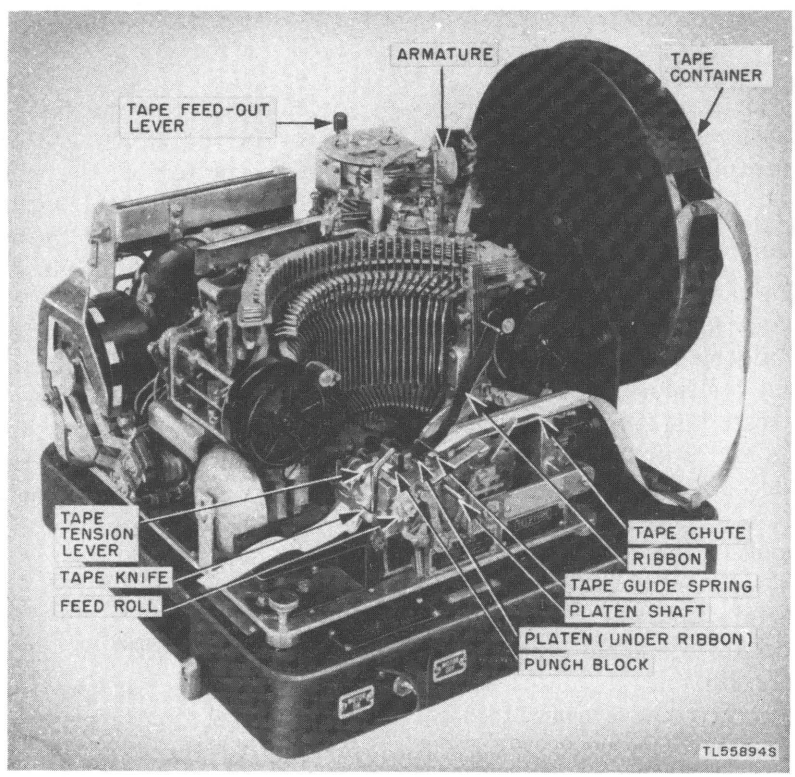

Figure 32. Installing tape in typing reperforator.

a. Remove the cover of the tape container.

b. Place the roll of tape on the spindle so that it unwinds from the bottom (clockwise).

c. Bring the tape out of the container and over the roller. (See fig. 32.)

d. Replace the cover of the container.

e. Thread the tape through the tape chute and below the tape-guide spring and through the punch block. (See fig. 32.)

f. Lift the tape-tension lever and pass the tape between the tape-tension lever and the feed roll.

g. Grasp the tape with the thumb and forefinger of one hand and strike characters with the other until sufficient perforations are made for the tape-feed pins to grip the tape-feed holes. (See fig. 32.)

h. Insert the tape in the tape guide.

i. Replace the tape-container cover.

32. Setting Range Finder

a. The procedure for the setting of the range finder, after arrangements have been made to connect the selector magnet (using cord with red shell plug) in a circuit where a long series of alternate R and Y impulses may be received, is always the same, regardless of the type of equipment used. The R and Y impulses may be transmitted from the local keyboard (if provided) through the cord with black shell plug or received from other teletypewriter equipment. In all cases, the current in the selector magnet should be approximately 60 milliamperes. An explanation of the use of a local test

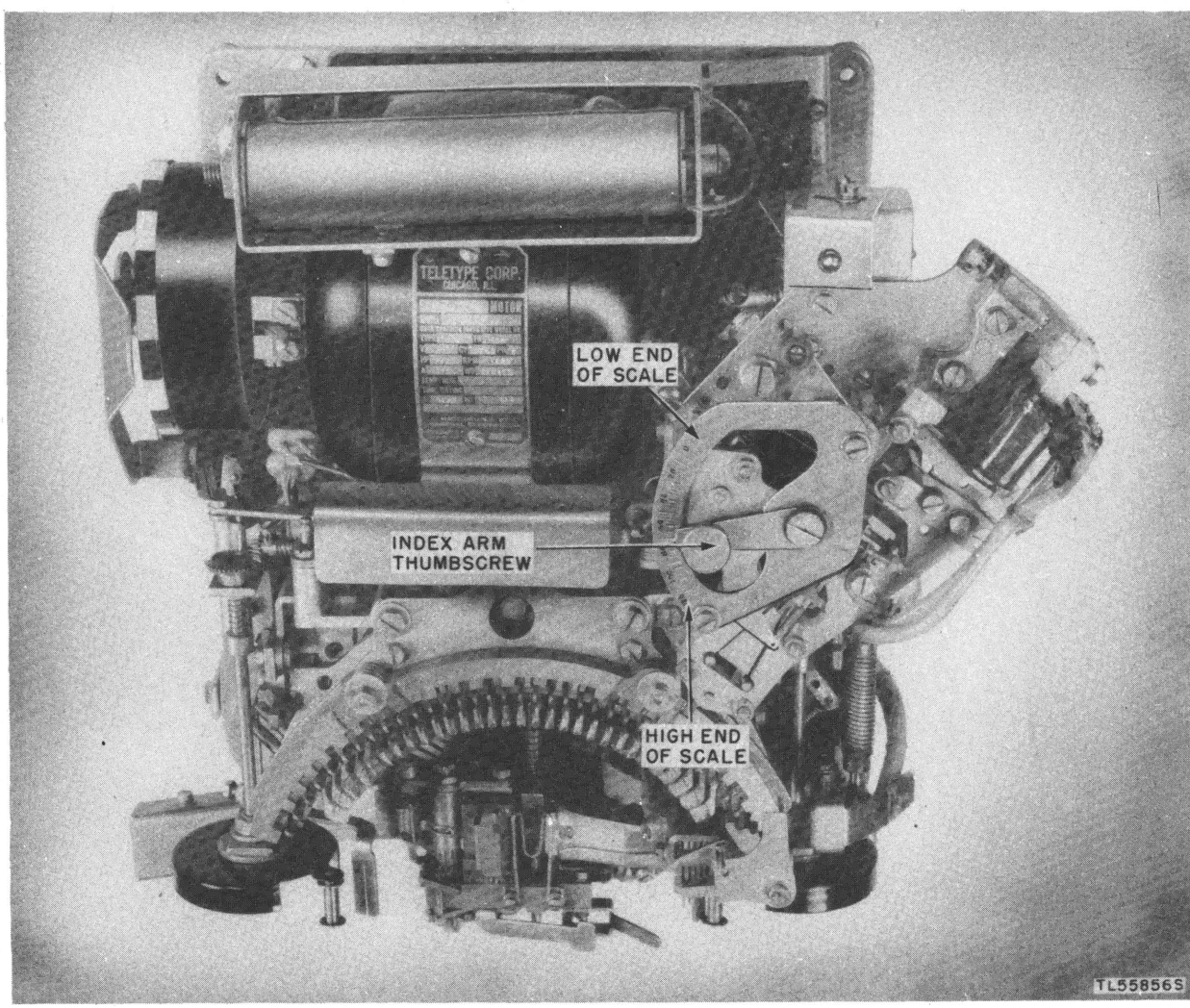

Figure 33. Range-finder mechanism.

circuit which may be used to provide the necessary current when no other teletypewriter is available is given in paragraph 116. Specific numerical settings of the range finder for initial and periodic line-ups of complete sets and systems are furnished in the technical manuals for the sets and systems.

b. After arrangements have been completed to receive a continuous series of alternate R and Y impulses in the selector magnet, proceed as follows to check and adjust the setting of the range finder:

(1) Loosen the index-arm thumbscrew of the range-finder mechanism (fig. 33) and move the index arm toward the zero on the scale until errors begin to appear in the printed letters R and Y.

(2) Move the arm slowly back toward the high end of the scale until the errors disappear.

(3) Note the low-limit scale reading.

(4) Move the arm toward the high end of the scale until errors again begin to appear.

(5) Move the arm *slowly* back toward the low end of the scale until the errors disappear.

(6) Note the high-limit scale reading.

(7) A typing reperforator, in good condition, should give a lower scale reading between 10 and 15, and an upper scale reading between 85 and 90. Add the low and high readings and divide the result by two to find the scale reading for best operation. (For example, a low reading of 15 plus a high reading of 90 gives 105, which, when divided by 2, gives a scale setting of 52.5, for best operation.)

(8) Set the index arm at the scale reading for best operation (as determined above) and tighten the thumbscrew securely.

PART THREE

MAINTENANCE INSTRUCTIONS

Note. The preventive maintenance instructions in this part will serve as a guide for any of the installations or groups of equipment for which this equipment is designed.

Do not attempt unauthorized maintenance on this equipment.

Section V. PREVENTIVE MAINTENANCE TECHNIQUES

33. Meaning of Preventive Maintenance

Preventive maintenance is a systematic series of operations performed at regular intervals on equipment when the equipment is not in the operating circuit. Preventive maintenance operations are designed to eliminate major breakdowns and unwanted interruptions in service, and to keep the equipment operating at top efficiency. To understand what is meant by preventive maintenance, it is necessary to distinguish it from trouble shooting and repair. The prime function of preventive maintenance is to prevent break-downs, and, therefore, the need for repair. The prime function of trouble shooting and repair is to locate and correct existing defects. The importance of preventive maintenance cannot be overemphasized. The entire system of teletypewriter communication depends upon each set's being in operation when it is needed and upon its operating efficiently. It is vitally important that teletypewriter operators and repairmen maintain their equipment properly.

Note. Most of the operations in this section are first echelon (operator) and second echelon (organization repairmen) maintenance. Some operations in section VIII, moistureproofing and fungiproofing, are third or higher echelon maintenance.

34. Description of Preventive Maintenance Techniques

a. GENERAL. Most of the mechanical and electrical parts used in teletypewriter equipment require routine preventive maintenance. Those requiring maintenance differ in the amount and kind required. Because hit-or-miss maintenance techniques are not reliable, definite and specific instructions are needed. This section contains these specific instructions and serves as a guide for personnel assigned to perform the six basic maintenance operations: Feel, Inspect, Tighten, Clean, Adjust, and Lubricate. Throughout this manual the following lettering system is used for the six operations:

F—Feel
I—Inspect
T—Tighten
C—Clean
A—Adjust
L—Lubricate

The first two operations, completed with the aid of necessary tools and test equipment, establish the need for the other four. The selection of operations is based on a general knowledge of field needs. For example, dust encountered on dirt roads during cross-country travel filters into the equipment no matter how much care is taken to prevent it. Rapid changes in weather (such as heavy rain followed by blistering heat), excessive dampness, snow, and ice tend to cause corrosion of exposed surfaces and parts. Without frequent inspections and the performance of necessary tightening, cleaning, adjusting, and lubricating operations, equipment becomes undependable and subject to break-down.

b. FEEL (F). The feel operation is used most often to check rotating machinery, such as the motor, cams, shafts, and to determine if electrical connections, bushings, etc., are overheated. Feeling indicates the need for lubrication or the existence of similar types of defects requiring correction. Many motors used in teletypewriter equipment operate at relatively high temperatures. The maintenance man must become familiar with the normal operating temperatures of the equipment in order to be able to recognize signs of overheating.

Note. It is important that the feel operation be performed as soon as possible after shut-down and always before any other maintenance is done.

c. INSPECT (I). Inspection is the most important operation in the preventive maintenance program. The inspector must know how to check for required clearances, tensions, and adjustments of the various types of mechanical assemblies. A careless observer will overlook the evidences of minor trouble. Although these minor defects may not interfere with performance of the equipment, valuable time and effort can be saved if they are corrected before they lead to major break-downs. Make every effort to become thoroughly familiar with the indications of normal functioning, in order to be able to recognize the signs of defective equipment. Inspection consists of carefully observing and checking with tools, gages, etc. (when they are required), all parts of the equipment. Notice state of cleanliness, lubrication, amount of wear, adjustment and placement, tightness, clearance, tension, overheating, and moisture accumulation. Inspect for these conditions as follows:

(1) Cleanliness, by carefully examining all surfaces of the units for accumulation of dust and dirt and excessive oil or grease. Parts, connections, and joints should be free of dust, corrosion, and other foreign matter. In tropical and high-humidity locations, look for fungus growth, mildew, and moisture accumulation.

(2) Inadequate or excessive lubrication.

(3) Excessive wear, as indicated by loose fittings, bearings, etc.

(4) Adjustment and placement, by determining that all mechanical and electrical parts are properly adjusted and in their original positions.

(5) Tightness, by testing any connection, assembly, or mounting that is normally fastened in a rigid position.

Caution: Before tightening any screws, bolts, or nuts, determine whether or not they are part or some adjustment. If so, tighten in accordance with detailed requirement and adjustment procedures given in part five and check all related adjustments.

(6) Clearance between specified points, by feeling, sighting, or inserting gages as specified for item inspected.

(7) Spring tensions, by using the appropriate special spring scale in the exact manner shown in the illustration accompanying each spring tension requirement.

(8) Overheating, as indicated by discoloration, blistering, or bulging of the parts or surface of the container; by leakage of insulating compounds; and by oxidation of metal contact surfaces.

d. TIGHTEN (T). This operation applies only to soldered connections, bolts, screws, and fasteners holding items rigidly in place. Solder loose or broken soldered connections. Correct tightening procedure requires the use of the proper type and size of tools. Do not tighten screws, bolts, and nuts carelessly. Fittings tightened beyond the pressure for which they are designed will be damaged or broken.

Caution: *Do Not Tighten Parts or Apparatus Requiring Clearance or Tension Adjustment.*

e. CLEANING (C). (1) This operation as applied to external surfaces of tables, boxes, covers, panels, frames, etc., is the normal cleaning process.

(2) Cleaning equipment interiors including delicate electrical and mechanical parts requires detailed specific instructions for each assembly and unit. This cleaning is normally performed as part of the preventive maintenance routine dsecribed in paragraphs 36 and 47.

(3) Detailed cleaning instructions for major overhauls are given in part five.

(4) Scheduled items marked with letter C need not be cleaned *each* time they are inspected. Under some conditions, however, it may be necessary to complete the cleaning of a unit before starting the other operations. Clean all parts only when inspection shows that it is necessary.

f. ADJUST (A). Adjustments are made only when they are necessary to restore normal operating conditions. Use extreme care in selecting the proper tools and gages before making adjustments. Many adjustments must be made in a particular sequence. *Each* adjustment must meet *all* requirements for clearance, spring tension, speed, and other tolerance limits. If *one* adjustment is changed, *all* related adjustments must be checked. This check may involve a certain amount of duplication, but there are no practical short cuts when making overlapping functional adjustments. Detailed

instructions for specific requirements and adjustments are given in part five.

g. LUBRICATE (L). Lubrication refers to the application of oil or grease to all rotating shafts and bearings, cam rollers, sliding surfaces, and other moving parts. It may include the application of oil to metal surfaces or parts of the equipment. All lubrication should be completed in accordance with instructions in section VII.

35. Introduction to Preventive Maintenance Procedure

a. The preventive maintenance procedure in this section is divided into two classes, work which can be completed while the teletypewriter set remains in service, and work which requires that the teletypewriter set be taken out of service.

(1) The first class of work is limited to the operations performed on the teletypewriter set exterior, that portion of the keyboard (when provided) which is accessible while the typing reperforator is in service, and the equipment table. Instructions for this work are given in paragraphs 36 and 37.

(2) The second class of work includes the operations which require that the cover, reperforator unit, keyboard base (when provided), and motor unit be removed from their mounting surfaces before the preventive maintenance work is started.

(3) Detailed information on the different individual test requirements and adjustments of complicated parts and mechanisms are not included in this section. The preventive maintenance check list in section VI includes references to the related instructions in requirements and adjustments, section XV, which apply to the preventive maintenance procedures included in this section.

b. Refer to section VII for lubrication instructions and section VIII for moistureproofing and fungiproofing instructions.

c. Preventive maintenance procedures for common classes of parts have been grouped as follows:

	Paragraph
Associated equipment tables or shelves	36
Typing reperforator exterior	37
Cords, cables, and wiring	39
Terminal blocks and slip connections	40
Keys and switches	41

d. Detailed preventive maintenance instructions are arranged by paragraphs as follows:

	Paragraph
Preparation for preventive maintenance inspection (typing reperforator out of service)	38
Typing reperforator unit (less type basket)	42
Type basket	43
Keyboard base (when provided)	44
Base (receiving-only)	45
Motor unit	46
Polar relays	47

e. When worn, bent, or defective parts are found, repair or replace them as discussed in part five.

f. After all preventive maintenance work including lubrication has been completed and the typing reperforator has been assembled, make the following test and adjustments:

(1) Motor speed.
(2) Range-finder setting.
(3) Local operating tests.

Note. Always Check Related Adjustments When Any Adjustment Is Made.

36. Preventive Maintenance for Associated Equipment Tables or Shelves

a. INSPECT. Inspect the associated equipment table or shelf for excess dirt, cracks, missing or broken screws, bolts, or nuts; bent, rusted, or otherwise damaged sliding surfaces, and worn or damaged mountings.

b. TIGHTEN. Tighten all loose screws, bolts, and nuts.

c. CLEAN. Clean the outer surfaces of the table or shelf with a piece of clean cheesecloth moistened slightly in water. Moisten the cloth with a little dry-cleaning solvent (SD) to remove oil, grease, or gummy deposits. Oil may be used to remove rust from the metal surfaces of the table or shelf.

37. Preventive Maintenance for Typing Reperforator Exterior (Typing Reperforator in Service)

a. GENERAL. The instructions given below apply to the exterior surfaces of the typing reperforator (typing reperforator cover) and the section of the keyboard (when provided) which is accessible without removing the cover.

b. COVER. (1) *Inspect.* Inspect the cover for broken cover glass, loose screws, broken or

damaged hinges, damaged copyholder, and scratches.

(2) *Tighten.* Tighten all loose screws.

(3) *Clean.* (*a*) Wipe the cover glass with a clean piece of cheese cloth dipped in water. Polish it with a piece of clean, dry cheesecloth.

(*b*) Remove dust and dirt from the outside surfaces of the cover by wiping it with a piece of clean cheesecloth moistened slightly in water. Moisten the cloth with a little dry-cleaning solvent (SD) to remove oil, grease, or gummy deposits.

(*c*) Remove dust from the inside surfaces of the cover by using a brush. Clean cheesecloth may be used but the lint has a tendency to cling to the inside padding and may cause damage to the moving parts of the typing reperforator. If this operation necessitates the removal of the cover, perform the necessary work when the typing reperforator is taken out of service for a routine inspection as outlined in paragraph 38.

c. KEYBOARD BASE. The operation performed on the keyboard base while the typing reperforator is in service consist of cleaning the outer surfaces of the keyboard, the key tops, and keylevers as described in paragraph 44.

38. Preparation for Preventive Maintenance Inspection (Typing Reperforator Out of Service)

a. For a thorough preventive maintenance inspection the typing reperforator must be taken out of service and partially disassembled as outlined in *b* below.

b. Take the following preparatory steps to facilitate inspection of the various units and parts.

(1) When a table, bench, or box is not available use the cover of the chest (in the case of tactical equipment) as a workbench. In the case of fixed plant equipment use a table. If practicable, lay the cover of the chest (if used) upright on several thicknesses of newspaper, cloth, or other material to protect the edges from scuffing and also to serve as a catch for small parts which may fall during disassembly of the equipment. If an equipment table is used, spread the newspaper or other material on top of the table to protect it from grease, oil, and other dirt.

(2) Disconnect the power and connecting cords.

(3) Remove the typing reperforator cover and place it where it will not be damaged.

(4) Fold a length of cheesecloth into a pad about 18 inches square and six or eight layers thick. If necessary, four or five thicknesses of any clean lint-free cloth can be used.

(5) Place the cloth pad on the workbench.

(6) Remove the base or keyboard base and place on several thicknesses of paper or cloth.

(7) Remove the tape container from the typing reperforator base. Remove the ribbon from the typing reperforator unit.

Caution: Be extremely careful in handling the typing reperforator unit. Units that have been dropped require a major overhaul and thorough testing before being put back into service.

39. Cords, Cables, and Wiring

a. GENERAL. The preventive maintenance procedure given in this paragraph applies to the wiring located in the base, on the typing reperforator unit, keyboard base (if provided), and motor unit. Wiring includes all cords, cables, and wiring placed at factory, at signal depot, or by installers and mechanics. Wires which are tied together with cords are sometimes referred to as wiring harness. Wiring on equipment operated in all kinds of weather and moved on all kinds of roads gets severe punishment. Watch its condition closely.

b. INSPECT. (I). Inspect the wiring for cracked or deteriorated insulation, frayed or cut insulation at the connecting and supporting points, and improper placement which strains wires or connections. Watch for kinks and improper supports.

(2) Inspect all ground connections for dirt, rust, corrosion, and loose connections. An open or loosely-connected grounded point may interfere with the operation of the equipment, and may also nullify the protection for operating personnel.

c. TIGHTEN (T). Tighten loose fasteners, cable clamps, coupling rings, wiring connections. Solder loose or broken soldered connections.

d. CLEAN (C). Clean connector straps when they are dirty or corroded. The easiest way to

clean a dirty connector is to remove it, scrub with a brush dipped in dry-cleaning solvent (SD), and dry it thoroughly with a cloth. Clean corroded connectors with No. 000 sandpaper. It is important that the entire contact surface of the connector be clean.

40. Terminal Blocks and Slip Connections

Terminal blocks, which are used as receiving, connecting, and distributing points for electrical circuits, consist of a strip of insulation and one or more types of connection devices. These connecting devices may be either soldered terminals, screw terminals, contact springs, or contact lugs. They require little preventive maintenance, especially if the wiring has not been changed.

a. CLEAN (C). Clean the terminal blocks, when necessary, with a dry brush. Wipe off excessive moisture with a *clean, dry cloth.* When necessary, use a cloth moistened with dry-cleaning solvent (SD) to clean the insulation string. Wipe thoroughly with a cloth and then brush the block to remove all lint. Remove corroded, loose, or dirty connecting devices and clean them with a piece of crocus cloth. Carbon tetrachloride should be used to clean the electrical contacts of all connecting devices.

b. INSPECT (I). Inspect terminal blocks for cracks, breakage, dirt, and loose connections or mounting screws; also inspect for flask-over paths. Carefully examine connections for mechanical defects, dirt, and corrosion.

c. TIGHTEN (T). Tighten loose screws, lugs, and mounting bolts. Use a screw driver of the correct size. Do not exert too much pressure. Solder any loose or broken soldered connections.

d. ADJUST (A). Adjust the spring tension of the contact springs when necessary. To increase the spring tension, grasp the spring near its point of attachment with either a spring bender or a pair of long-nose pliers. Twist the pliers or spring bender slightly in the direction in which tension is desired and move the tool continuously along the slight bow in the spring. Try the action of the contact after each adjustment. Be careful to keep all soldered connections intact.

Note. Loose soldered connections should be repaired only by an experienced mechanic. Refer to related topics in section XIV.

41. Keys and Switches

a. GENERAL. All keys and switches on the typing reperforators are grouped as a common class. No specific information is provided for any particular key or switch.

b. INSPECT (I). Inspect the mechanical action of each key or switch and look for signs of dirt or corrosion of the key or switch; examine the action of the switch by flipping the control knob or toggle, or by pressing the key-lever and noting the freedom of movement and the amount of spring tension. Check to see that the contacts are clean.

c. CLEAN (C). Wipe off excessive moisture with a *clean, dry cloth.* Clean the exterior surfaces of keys and switches with a stiff brush moistened in dry-cleaning solvent (SD) and polish the surfaces with a piece of cloth. Clean corroded key contacts by burnishing. Do *not* use sandpaper. Build-ups should be removed with the 5217A tool, which is designed for that purpose, and the pits should be burnished.

d. TIGHTEN (T). Tighten loose screws, lugs, and mounting bolts, remove loose connections which are dirty or corroded and clean them before tightening or soldering. Solder any loose or broken soldered connections.

e. ADJUST (A). Adjust keys and switches in accordance with specifications given in section XV.

42. Typing Reperforator Unit (Less Type Basket)

a. CLEAN (C). To simplify description of the cleaning procedures, instructions for cleaning the type basket, which is a major assembly of the typing reperforator unit, are given in paragraph 43 following. To clean the remainder of the typing reperforator unit, proceed as follows:

(1) Place the typing reperforator unit on the workbench. Remove all old grease and oil that have gathered dirt and dust. Use a piece of clean, dry cheesecloth or other lint-free cloth folded over the end of screw driver TL–44 to get between the hard-to-reach places.

(2) Use a clean area of the cheesecloth as soon as one area becomes soiled with oil or grease. Loop a piece of cloth over the fingers and wipe all readily accessible surfaces.

Caution: Do not wipe dirty grease or other foreign matter into bearings. Remove as much of the dirty grease as possible with the tip of the screw driver or an orange stick. Wipe each bearing with a piece of clean cheesecloth.

(3) Loosen both range-finder retaining screws. Remove the left-hand screw completely and slip the range finder off the remaining screw (with the slotted screw hole). Use a clean piece of cheesecloth folded over the end of a screw driver to remove oily deposits of dirt, dust, paper lint, etc., from the outer surfaces of the selector mechanism and range finder.

(4) Flush the selector mechanism by pouring a small amount (about 1 tablespoonful) of dry-cleaning solvent (SD) between the separator plates. Repeat the flushing process if necessary.

b. INSPECT (I). Check the following parts for deficiencies as indicated:

(1) Frame casting for cracks or other damage.

(2) Loose, broken, or missing mounting screws.

(3) All levers, bell cranks, rollers, bearings. shafts, and gears to determine that all parts move freely and are not bent, broken, or excessively worn.

(4) Missing, broken, or distorted springs.

(5) Main shaft and associated gears, bearings, cams, clutches, and springs for binding, excessive wear, or other damage.

c. TIGHTEN (T). Tighten loose screws, bolts, or nuts if they are not part of some adjustment.

d. ADJUST (A). Make all necessary adjustments in accordance with detailed requirements in section XV.

e. LUBRICATE (L). Refer to section VII for instructions on lubrication.

43. Type Basket

Do not remove basket.

a. CLEAN (C). (1) Fold a piece of clean cheesecloth into a pad about 8 inches wide and four or five layers thick.

(2) Insert the pad between the type bars and the backstop to catch the dirt and excess dry-cleaning solvent (SD).

(3) Wipe the faces of the type-bar pallets with a piece of cheesecloth moistened in dry-cleaning solvent (SD). Be careful not to bend the type bars. After the pallets are dry, brush them with a dry typewriter brush (part of Tool Equipment TE–50). Repeat the process if necessary. Flush the segment slots with dry-cleaning solvent (SD).

b. INSPECT (I). Inspect the type basket for the following:

(1) Missing mounting screws, bolts, and loose parts.

(2) Frame for cracks or other damage.

(3) Each type bar to determine that all parts move freely and are not bent or broken.

(4) Each type bar for missing or damaged pallets.

(5) Levers, gears, shafts, and bearings for signs of excessive wear, loose parts, or damage.

(6) Missing, broken, or distorted springs.

c. TIGHTEN (T). Tighten all loose screws, bolts, and other parts which are not involved in an adjustment.

d. ADJUST (A). Make all required adjustments in accordance with instructions in section XV.

e. LUBRICATE (L). Refer to section VII for instructions on lubrication.

44. Keyboard Base

Note. If the keyboard base is not used, see paragraph 45. Place the keyboard base on the workbench.

a. CLEAN (C). Do not disassemble the keyboard base for ordinary cleaning. Refer to part five for major overhaul cleaning. For routing cleaning follow the procedure outlined below:

(1) Clean the key tops with a cloth slightly moistened with water. Wipe off excessive moisture with a *clean, dry cloth.*

Caution: Do not use dry-cleaning solvent (SD) or carbon tetrachloride on rubber key tops.

(2) Remove all oil, grease, dust, and dirt from the outside surfaces of the keyboard by wiping it with a clean cheesecloth.

(3) Clean between the keylevers and around the transmitting mechanism with a stiff brush.

b. INSPECT (I). Inspect the keyboard for the following:

(1) Casting for cracks or other damage.

(2) Loose, broken, or missing mounting screws.

(3) All levers, pawls, latches, and cams to determine that all parts move freely and are not bent, broken, or excessively worn.

(4) Broken, missing, or illegible key tops.

(5) Missing, broken, or distorted springs.

(6) Transmitting shafts and associated gear, clutch, and bearings for binding and wear.

c. TIGHTEN (T). Tighten only those loose parts which are not part of an adjustment.

d. ADJUST (A). Adjust the spring tension of the contact springs when necessary. To increase the spring tension, grasp the spring near its point of attachment with either a spring bender or a pair of duckbill pliers. Twist the pliers or spring bender slightly in the direction in which tension is desired and move the tool continuously along the slight bow in the spring. Try the action of the contact after each adjustment. Be careful to keep all soldered connections intact.

Note. Loose soldered connections should be repaired only by an experienced mechanic. Refer to related topic in section XIV.

e. LUBRICATE (L). Lubrication instructions are contained in section VII.

45. Base (Receiving-Only)

Place the base on the workbench.

a. CLEAN (C). Wipe all oil and grease from the base. Use a piece of cheesecloth folded over the tip of a screw driver to get into hard-to-reach places. Be careful not to break any of the leads of the base wiring.

b. INSPECT (I). Inspect for the following:

(1) Cracks in the casting and other damage.

(2) Loose, broken, or missing mounting screws.

(3) Refer to paragraphs 39, 40, and 41 for other points to be inspected.

c. TIGHTEN (T). Tighten loose screws, bolts, and other parts not involved in adjustments. Other points to be tightened are given in paragraphs 39, 40 and 41.

d. ADJUST (A). Refer to section XV for the required adjustments.

e. LUBRICATE (L). Refer to section VII for points to be lubricated.

46. Motor Unit

Note. Normally the motor unit will not be removed from the typing reperforator base during preventive maintenance routines.

a. INSPECT (I). Check the following parts as outlined.

(1) Motor and motor-unit base for cracks and other damage.

(2) Loose, broken, or missing mounting screws.

b. FEEL (F). Feel the motor while it is in service to determine if it is overheated. If the motor is not in service and has been idle, it should be run for 5 to 10 minutes, then checked for overheating.

c. TIGHTEN (T). Tighten loose screws and bolts which are not part of an adjustment.

d. CLEAN (C). When cleaning the motor unit, *do not* remove the motor-unit base unless absolutely necessary.

(1) Remove all oil, grease, and other foreign matter from the outer surfaces of the motor unit by wiping with a dry cloth.

(2) Remove the motor brushes and see if they meet the inspection requirements given in paragraph 142. Clean the brushes and the inside of the brush holders with a cloth moistened with dry-cleaning solvent (SD). During this operation check the condition of the carbon brushes.

Note. Scratch an identifying mark on the upper surface of each carbon brush upon its removal in order to facilitate replacing the brush into its proper brush holder after cleaning.

Caution: Do not take the governor apart for cleaning only, unless there is reason to believe it is very dirty internally and that the dirt may be a source of trouble.

e. ADJUST (A). Make necessary adjustments to all parts as prescribed in section XV. For check and adjustment of motor speed refer to paragraph 29.

f. LUBRICATE (L). Refer to section VII for lubrication instructions.

47. Polar Relays

a. GENERAL. In applying preventive maintenance to polar relays, it is essential that maintenance personnel familiarize themselves with all details of the relay by examining it while it is in good condition. In this way, they will be prepared to recognize defects which will affect operation of the relay. Extreme care should be used when handling the relay so as not to damage or misaline the relay mechanism.

b. INSPECT (I). (1) A relay is considered to be in good operating condition if:

(*a*) The exterior is free from dirt or dust.

(*b*) The relay assembly is securely mounted.

(*c*) The relay coil shows no signs of overheating.

(*d*) The wire insulation is not frayed or torn.

(*e*) The connections to the relay are tight.

(*f*) The contacts are lined up and correctly spaced.

(*g*) The contact springs are in good condition.

(*h*) The armature travels freely and functions satisfactorily.

(*i*) The contacts are not burned, pitted, or corroded.

(2) If the relay fails to meet requirements f to i in the above list, refer to paragraph 493 and to TM 11–2513.

c. TIGHTEN (T). Tighten all loose connections and mounting screws, but do not apply enough force to damage the screws or break the parts.

d. CLEAN (C). (1) *Relay exterior.* The interior and exterior of the relay cover should be wiped clean with a lint-free cloth. Do not remove leads from the relay unless it is in higher echelon shops for repair.

(2) *Relay contacts.* (*a*) Before removing covers of relays, see that all apparatus is free of dust, dirt, or other foreign matter which might fall into the relay contacts.

(*b*) Remove loose dust or lint from the relay contacts with a soft-bristle brush.

(*c*) Inspect the relay contacts thoroughly. If they are dirty, burned, pitted, or corroded, service them in accordance with the instructions below.

Note. The brown discoloration found on silver or silver-plated contacts is silver oxide and is a good conductor. It should not be removed unless the contacts must be cleaned for some other reason. It may be removed at any time either by burnishing or by rubbing with a cloth moistened with carbon tetrachloride.

(*d*) To clean contacts, insert a clean flat blade in the burnishing tool (Tool, switchboard, contact burnisher, WECo 265C, Signal Corps stock No. 6R41065C). Keep the blade clean by frequent wiping with a lint-free cloth moistened with carbon tetrachloride. To burnish normally open contacts, press them together with the orange stick (or suitable substitute) or operate the relay manually to give a slight pressure against the blade of the burnisher. At the same time move the blade back and forth two or three times or as often as necessary to brighten the contacts. But avoid excessive burnishing. When too much of the contact metal is removed, the contact follow is destroyed and readjustment is necessary. When burnishing normally-closed contacts, the tension of the springs themselves will usually supply enough pressure against the burnisher. If the spring tension is heavy, lift one of the springs away sufficiently to insert the burnisher.

(*e*) If burnishing does not eliminate the contact trouble, use carbon tetrachloride to clean the contact surfaces more thoroughly. Dip the flat end of a clean toothpick into the carbon tetrachloride. Then, holding the contacts slightly separated, deposit the liquid on the contacts without rubbing. Use the flat end of another toothpick to deposit more carbon tetrachloride on the contact to flush away dirt loosened by the first application. Again do not rub. Be careful to keep the carbon tetrachloride from all insulating materials. When the contacts are thoroughly dry, burnish them ((*d*) above) to remove all deposit or residue. Always burnish the contacts after cleaning with carbon tetrachloride.

(*f*) Contact points which are badly pitted or built up may be reconditioned as follows: Remove the build-ups with a fine-cut point file (or in emergencies, crocus cloth). Burnish the pits with the ball-point burnisher blade furnished with the switchboard contact burnishing tool. If the pit is small, place the ball point of the burnisher in the pit and rotate the barrel of the tool between the thumb and finger, at the same time applying slight pressure. If the pit is large, move the ball point of the burnisher over the surface of the pit with a circular motion. After removing build-ups and cleaning pits, again burnish the contacts with a flat blade of the contact burnisher. Always be careful to avoid excessive removal of the contact metal. Otherwise contact follow and separation requirements will be affected and readjustment will be necessary.

Caution: Never use highly abrasive material, such as sandpaper or emery cloth, to clean relay contacts.

(*g*) Relay pole faces and armature faces must be cleaned occasionally. These are the surfaces of the core and armature which touch

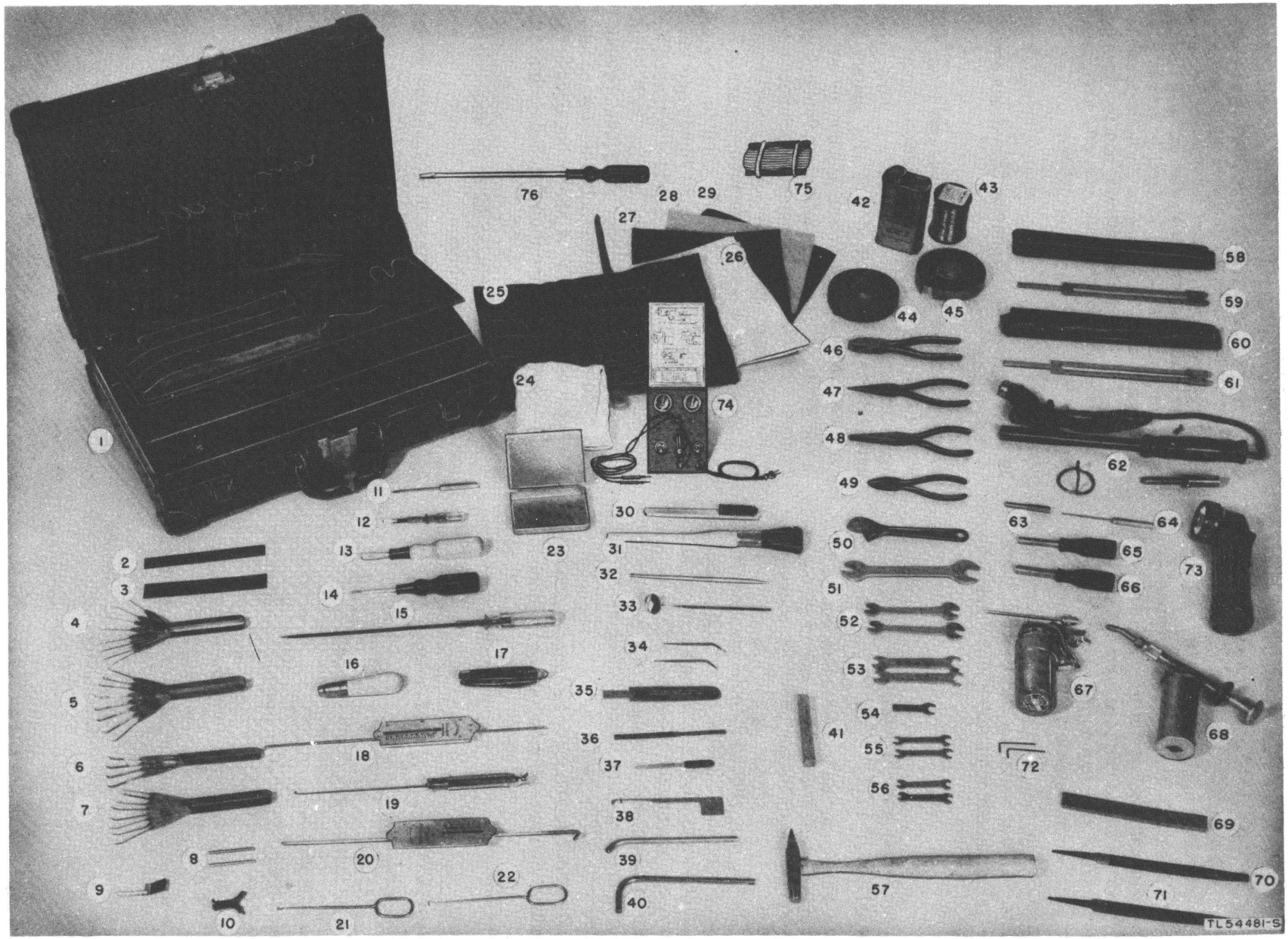

Figure 34. Tools and materials contained in tool equipment TE—50.

each other when the relay operates. Need for cleaning is indicated by a tendency to stick during operation. Clean with a burnisher and carbon tetrachloride. Or use the following method: Insert a strip of hard-finish bond paper between the armature and the core. Lightly press the armature against the core and withdraw the paper. Repeat with clean paper until it shows no evidence of dirt.

Caution: Do not use paper to clean relay contacts. Minute burrs on the contact surface may retain fine shreds of paper and cause faulty contact.

48. Preventive Maintenance Tools and Materials

Note. Before starting preventive maintenance, have on hand all tools and materials needed in performing the operations listed in the preventive maintenance check list.

a. TOOLS. All required tools are furnished with tool equipment TE–50 (fig. 34), which is especially designed for maintenance of teletypewriter equipment. The list of tools and materials contained in tool equipment TE–50 appears in War Department Signal Supply Catalog SIG 6 TE–50.

b. MATERIALS. All materials listed below may be secured through regular supply channels.

Item	Signal Corps stock No.
Orange stick (WECo code No. KS—6320)	6X7360
Cheesecloth, bleached 36″ wide	8A805
Cloth, emery: crocus, 9″ x 11″ sheets (spec No. 42C56-Navy).	6Z2000
Carbon tetrachloride	6G184.1
Oil, Lubricating, Preservative, Special U. S. Army spec No. 2—120.	6G1318.1
Grease, Lubricating, Special, Ordnance spec No. AXS—637.	6G673.7
Paper, cleaning, Bell Seal bond, ¼″ x 2½″ (WECo code No. KS—7188).	6M750
Paper, sand; flint #0000 9″ x 11″ sheets, Federal spec No. P-P-111. Solvent, Dry Cleaning, Federal spec No. P-S-661a.	6Z7500-0000

Note. Gasoline will not be used as a cleaning fluid for any purpose. Solvent, Dry Cleaning, is available as a cleaning fluid through established supply channels. Oil, Fuel, Diesel, may be used for cleaning purposes when dry-cleaning solvent (SD) is not on hand. Carbon tetrachloride will be used as a cleaning fluid only in the following cases: where inflammable solvents cannot be used because of the fire hazard, and for cleaning electrical contacts including relay contacts, plugs, commutators, etc.

49. Preventive Maintenance Schedules and Records

Prepare a chart showing the various teletypewriter equipments in the installation, the average number of hours of operation daily, the dates routines are scheduled, the dates the routines are completed, and initials or other designation of person completing routine. If desired, one chart can cover the entire teletypewriter set of which the typing reperforator is a part. Base the schedule upon accurate information and revise it from time to time as conditions change. The record form used may cover time intervals of 1 month, 2 months, or any other interval desired by the officer in charge of the installation. A typical preventive maintenance routine schedule for a teletypewriter installation is shown as figure 35. The recommended time intervals for equipment routines are:

Equipment in operation 12 to 24 hours daily —Routine every 10 days.

Equipment in operation 8 to 12 hours daily —Routine every 15 days.

Equipment in operation 8 hours or less daily —Routine every 30 days.

The above time intervals for equipment routines are based on operating conditions which prevail when the temperature is moderate and air is relatively free of dirt, sand, and excessive amounts of dust and moisture. When equipment is being operated in localities where there are extreme temperatures, excess moisture, dust, dirt, or sand, or other adverse conditions, establish the routine schedules on whatever intervals are necessary to keep the equipment in satisfactory operating condition.

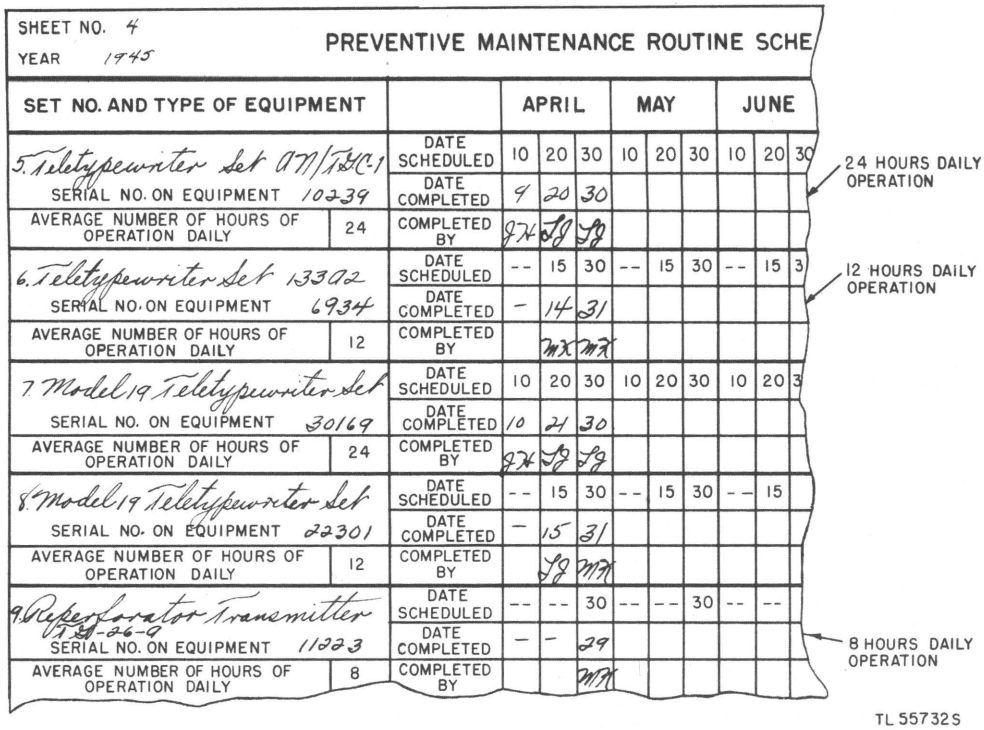

SHEET NO. 4
YEAR 1945

PREVENTIVE MAINTENANCE ROUTINE SCHE

SET NO. AND TYPE OF EQUIPMENT		APRIL			MAY			JUNE			
5. Teletypewriter Set AN/TGC-1	DATE SCHEDULED	10	20	30	10	20	30	10	20	30	24 HOURS DAILY OPERATION
SERIAL NO. ON EQUIPMENT 10239	DATE COMPLETED	9	20	30							
AVERAGE NUMBER OF HOURS OF OPERATION DAILY 24	COMPLETED BY	JH	JJ	JJ							
6. Teletypewriter Set 13302	DATE SCHEDULED	--	15	30	--	15	30	--	15	3	12 HOURS DAILY OPERATION
SERIAL NO. ON EQUIPMENT 6934	DATE COMPLETED	-	14	31							
AVERAGE NUMBER OF HOURS OF OPERATION DAILY 12	COMPLETED BY		MX	MX							
7. Model 19 Teletypewriter Set	DATE SCHEDULED	10	20	30	10	20	30	10	20	3	
SERIAL NO. ON EQUIPMENT 30169	DATE COMPLETED	10	21	30							
AVERAGE NUMBER OF HOURS OF OPERATION DAILY 24	COMPLETED BY	JH	JJ	JJ							
8. Model 19 Teletypewriter Set	DATE SCHEDULED	--	15	30	--	15	30	--	15		
SERIAL NO. ON EQUIPMENT 22301	DATE COMPLETED	-	15	31							
AVERAGE NUMBER OF HOURS OF OPERATION DAILY 12	COMPLETED BY		JJ	MX							
9. Reperforator Transmitter TT-26-G	DATE SCHEDULED	--	--	30	--	--	30	--	--		
SERIAL NO. ON EQUIPMENT 11223	DATE COMPLETED	-	-	29							8 HOURS DAILY OPERATION
AVERAGE NUMBER OF HOURS OF OPERATION DAILY 8	COMPLETED BY			MX							

TL 55732S

Figure 35. Typical preventive maintenance routine schedule.

Section VI. PREVENTIVE MAINTENANCE CHECK LIST

50. Preventive Maintenance Check List for Model 14 Typing Reperforators

The following check list is a summary of the preventive maintenance to be performed on all model 14 typing reperforators. The time intervals shown on the check list may be reduced at any time by the local commander. However, for best performance of equipment, the operations must be performed at least as frequently as called for in the check list. The echelon column indicates which operations are first-echelon maintenance and which operations are second-echelon maintenance. Operations are indicated by the letters of the word FITCAL. For example, if the letters ITA appear in the Operations column, the item to be treated must be inspected (I), tightened (T), and adjusted (A).

Preventive Maintenance Check List for Typing Reperforators

Item No.	Operations	Item (routine)	Par. No.	When performed	Echelon
1	IC	Typing reperforator (exterior)	37	Daily	1st
2	IA	Motor speed	29	Daily	1st
3	ITC	Equipment table or shelf	36	Daily	1st
4	IA	Range-finder setting	32	X	2d

Preventive Maintenance Check List for Typing Reperforators (cont'd.)

Item No.	Operations	Item (routine)	Par. No.	When performed	Echelon
		Typing reperforator unit			
5	IC	All mechanical parts	42	X	2d
6	IT	General over-all mechanical condition	42	X	2d
7	ICA	Selector mechanism	42	X	2d
8	IC	Main shaft	42	X	2d
9	I	Main-shaft bearings	42	X	2d
10	I	Main-bail roller	42	X	2d
11	I	Punch-arm cam roller	42	X	2d
12	I	Main-bail spring	42	X	2d
13	L	Entire mechanism	42	X	2d
		Type-basket assembly			
14	IC	All mechanical parts	43	X	2d
15	IT	General over-all mechanical condition	43	X	2d
16	I	Type bars	43	X	2d
17	I	Springs	43	X	2d
18	L	Entire mechanism	43	X	2d
		Keyboard base			
19	ITC	Cords, cables, and wiring	39	X	2d
20	ITC	General over-all mechanical condition	44	X	2d
21	ICA	Transmitting contacts	44	X	2d
22	ITC	Wiring and slip connections	39,40	X	2d
23	L	Entire mechanism	44	X	2d
		Motor unit			
24	C	Exterior of motor unit	46	X	2d
25	FIT	General mechanical condition	46	X	2d
26	IT	Motor pinion gear	46	X	2d
27	ICA	Motor brushes and commutator	46	X	2d
28	ICA	Governor	46	X	2d
29	ITC	Switch and wiring	39,41	X	2d
30	L	Motor unit	46	X	2d
		Base (receiving-only)			
31	C	All mechanical parts	45	X	2d
32	ITA	General mechanical condition	45	X	2d
33	ITC	Switch (motor)	41	X	2d
34	ITC	Terminal blocks and slip connections	40	X	2d
35	ITC	Cords, cables, and wiring	39	X	2d
36	ITCA	Line relay	47	X	2d
37	L	Entire base mechanism	45	X	2d

Note. X in When performed column is determined by average hours of use:

	Normal temperatures	*Tropical temperatures*
Up to 8 hours per day	every 30 days	every 15 days
8 to 12 hours per day	every 15 days	every 10 days
12 to 24 hours per day	every 10 days	every 7 days

F	I	T	C	A	L
Feel	Inspect	Tighten	Clean	Adjust	Lubricate

Section VII. LUBRICATION

Note. A War Department Lubrication Order is not issued on typing reperforators.

51. Recommended Lubricants

The following table lists the lubricating materials necessary in servicing the typing reperforators:

Approved symbols	Standard nomenclature
GL	Grease, Lubricating, Special
PS	*Oil, Lubricating, Preservative, Special
OE 10	*Oil, Engine, SAE 10

*When the temperature is so high that special preservative lubricating oil (PS) runs off the parts, engine oil, SAE 10 (OE 10), may be used in place of it.

52. Detailed Lubrication Instructions

a. GENERAL. The location of the parts of the typing reperforator to be lubricated are shown in figures 36 through 43. The type of lubricant to be used and the specific instructions for lubricating each part are given in paragraph 54. The lubrication instructions listed are based on normal operating conditions, with the equipment in service for an average of 8 hours a day. Under these conditions the lubrication interval is once every 30 days. Refer to the preventive maintenance check list. (See par. 50.) When equipment is operated more than 8 hours a day, reduce the intervals. When equipment is operated in tropical climates, a further reduction in the interval is required. Do not lubricate the equipment with the motor running.

Caution: Do not apply lubricants in excess of the quantities recommended. Wipe off excess oil.

b. METHODS OF APPLYING GREASE. (1) *Filling of grease gun.* Fill the grease gun furnished as part of tool equipment TE–50 in the following manner:

(*a*) Unscrew the lubricant tube from the cap casting.

(*b*) Place the open end of the lubricant tube over the opening in the filling washer in the can of proper lubricant. Press down on the lubricant tube until the tube is filled.

Note. If the cans of lubricant on hand are not equipped with filling washers, press the metal follower against the back end of the lubricant tube and fill the lubricant tube by using a clean wooden paddle or the fingers. Tamp the lubricant down solidly in the tube by pounding the closed end sharply against the palm of the hand. Continue to add lubricant and tamp until the tube is completely filled.

(*c*) Screw the lubricant tube back into the cap casting just enough to hold the tube in place. Insert a rod, screw driver, pencil, or similar object through the perforated end of the lubricant tube and press the metal follower into the tube to expel any air that may be trapped in the tube. When the lubricant begins to ooze past the threads, tighten the lubricant tube securely into the cap casting.

(*d*) Operate the handle back and forth several times until lubricant is pumped from the nozzle. The grease gun is then ready for use. If the lubricant does not flow from the nozzle in a solid stream when the handle is operated, it is an indication that all the air has not been expelled from the lubricant tube. Invert the gun and pound the cap casing end against the palm of the hand to jar the lubricant into the pump cylinder.

(2) *Greasing pressure fittings.* To grease parts that are equipped with pressure fittings, place the nozzle of the grease gun squarely against the grease fittings and operate the hande.

Caution: Test the grease gun *before* greasing pressure fittings to determine how much grease is injected for each full operation of the handle. DO NOT OVERLUBRICATE EQUIPMENT.

(3) *Greasing flat surfaces.* To grease flat surfaces, hold the nozzle of the grease gun against the surface, tilted at an angle of approximately 45°. Operate the handle until sufficient grease is ejected. If the surface is long, operate the handle slowly and at the same time move the nozzle of the gun along the surface to form a continuous ribbon of lubricant. The lubricant may be pumped out onto the fingers or the end of a screw driver for transfer into hard-to-reach places that cannot be reached directly with the grease gun.

c. METHODS OF APPLYING OIL. (1) *Filling of oiler.* Fill the oiler furnished as part of Tool Equipment TE–50 by unscrewing the top. Remove the pump. Fill the tube with proper lubricant and replace the pump. Tighten the top.

(2) *Use of oiler.* After filling the oiler, or when starting to use the oiler after it has been standing for some time, operate the pump handle until oil is forced out of the nozzle and then adjust the stop beneath the pump handle for the desired flow of oil. Turn the adjusting stop in a counter-clockwise direction to reduce the flow of oil and in a clockwise direction to increase the flow of oil.

Note. The adjustable stop beneath the pump handle may be moved to one side to make the stop inoperative.

(3) *Use of wire for applying oil.* Where the approved oiler is not available, it is recommended that a piece of No. 22 B and S wire of suitable length be dipped ½ inch into the oil and immediately touched to the surface or point to be lubricated. One or two drops of oil can be applied in this manner and will reduce the possibility of over lubrication.

53. Preparation for Lubrication

a. GENERAL. To thoroughly lubricate the typing reperforator it must be taken out of service and partially disassembled as outlined in subparagraph *c* below.

b. GREASE GUN. Fill the grease gun and oiler (part of tool equipment TE–50) as outlined in paragraph 52*b* and *c*.

c. PREPARATION. Take the following preparatory steps to facilitate lubrication of the various parts and units.

(1) Disconnect the power during the lubricating process.

(2) Remove the cover.

(3) Remove the tape container.

(4) Remove the typing reperforator unit from the base.

(5) Remove the keyboard base (when provided).

d. OLD LUBRICANTS. Remove all old grease and oil with a clean, dry, lint-free cloth. Wrap the cloth around the end of a screw driver or an orange stick to remove old lubricants in hard-to-reach places.

e. LUBRICATION. Lubricate the typing reperforator in accordance with the charts given in paragraph 54 below. Items need not be lubricated in the sequence given in the charts, but all points listed *must* be lubricated.

54. Lubrication Charts for Typing Reperforators

The charts in this paragraph list the points to be lubricated on the typing reperforators, the type of lubricant, and the quantity to be applied. The item numbers listed are grouped to include all the points of lubrication on each unit of the typing reperforator. The same numbers are shown on the accompanying illustrations.

a. MOTOR UNIT AND BASE.

Item	Fig. No.	Name of part	Lubricant	Method and quantity
1	36	Motor pinion	GL	Apply sparingly
2	36	Motor bearing oilers (2)	PS	4 or 5 drops in each
3	36	Motor speed-adjusting lever pilot screw	PS	1 or 2 drops
		Receiving-only (high) base		
4	36	Tape-reel bearing	PS	1 or 2 drops
5	36	Tape retainer-arm bearing	PS	1 or 2 drops on each side
6	36	Tape retainer-arm spring	PS	1 or 2 drops at point of contact with top of mounting bracket
		Receiving-only (low) base		
7	36	Tape-out lever gear	GL	Apply sparingly
8	36	Tape-out lever gear (oil cup)	PS	Fill oil cup
9	36	Tape-out lever bearing (2)	PS	1 or 2 drops on either side
10	36	Tape-out bell-hammer pivots (2)	PS	1 or 2 drops

b. Lubrication on Bottom of Keyboard Base.

Item	Fig. No.	Name of part	Lubricant	Method and quantity
101	37	Universal-bar pivots (2)	PS	1 or 2 drops
102	37	Selector-bar rollers on each side	PS	1 or 2 drops
103	37	Selector bars at each guide bracket	PS	1 or 2 drops
104	37	Keylevers just in front of selector bars	PS	1 or 2 drops on each
105	37	Keylever rear bearing rod at five equidistant points	PS	1 drop at each point
106	37	Keylever springs at point of engagement with notch in keylever	PS	Apply sparingly
107	37	Keylever springs	GL	Apply film of grease

c. Lubrication on Top Side of Keyboard Base.

Item	Fig. No.	Name of part	Lubricant	Method and quantity
108	38	Transmitting-shaft bearings (2 oil cups)	PS	Fill cups
109	38	Driven clutch member through coils of spring	PS	Apply sparingly
110	38	Intermediate pawl at pivot	PS	1 or 2 drops
111	38	Trip-off pawl at pivot and at surface bearing on trip-off pawl eccentric	PS	1 or 2 drops at each point
112	38	Space repeat rod on each bearing point and points of contact.	PS	1 or 2 drops
113	38	Clutch throw-out lever bearings	PS	1 or 2 drops
114	38	Lock-loop bearings	PS	1 or 2 drops
115	38	Lock-loop roller	PS	1 or 2 drops
116	38	Tape-out lever bearing	PS	1 or 2 drops on either side
117	38	Tape-out bell-hammer pivots	PS	1 or 2 drops
118	38	Locking levers (5) bearings	PS	1 or 2 drops
119	38	Contact levers	PS	1 drop on side of each lever so oil will run down on pivot.
120	38	Spacer bar on each of four pivots and on pivot for spacer keylever.	PS	1 or 2 drops on each point
121	38	Keyboard gears	GL	Apply sparingly

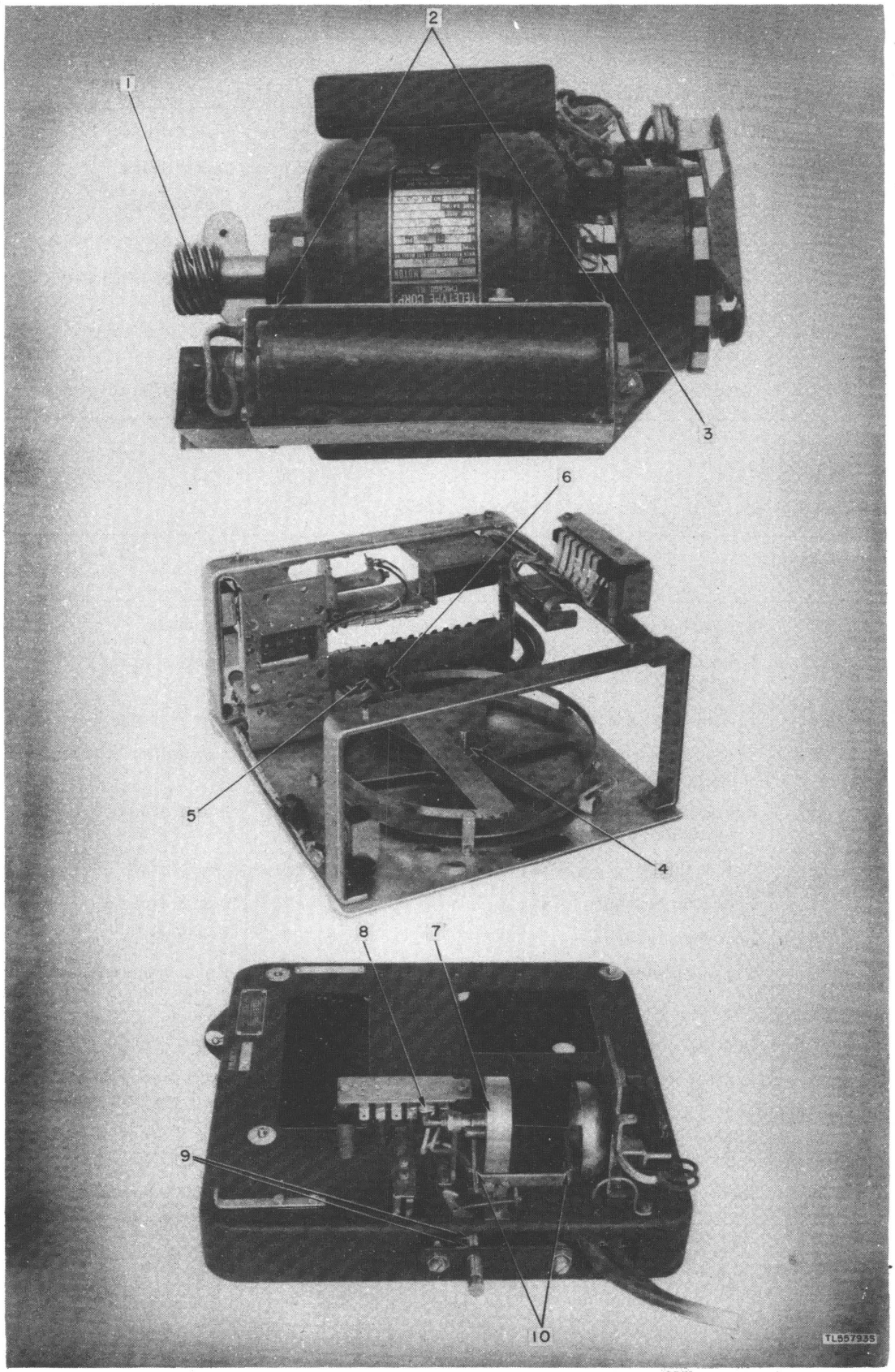

Figure 36. Lubrication points for motor unit and base.

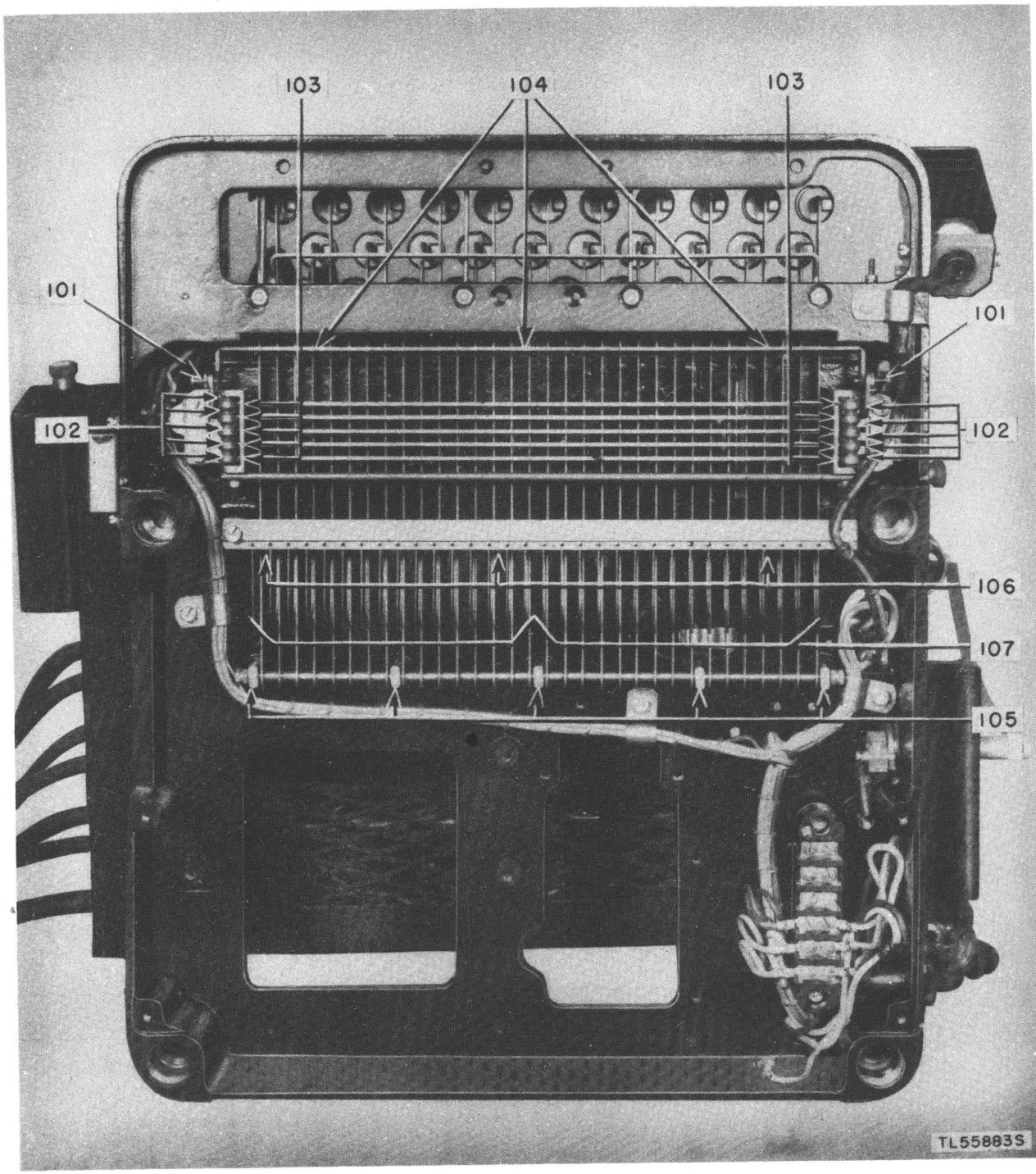

Figure 37. Lubrication points for bottom of keyboard base.

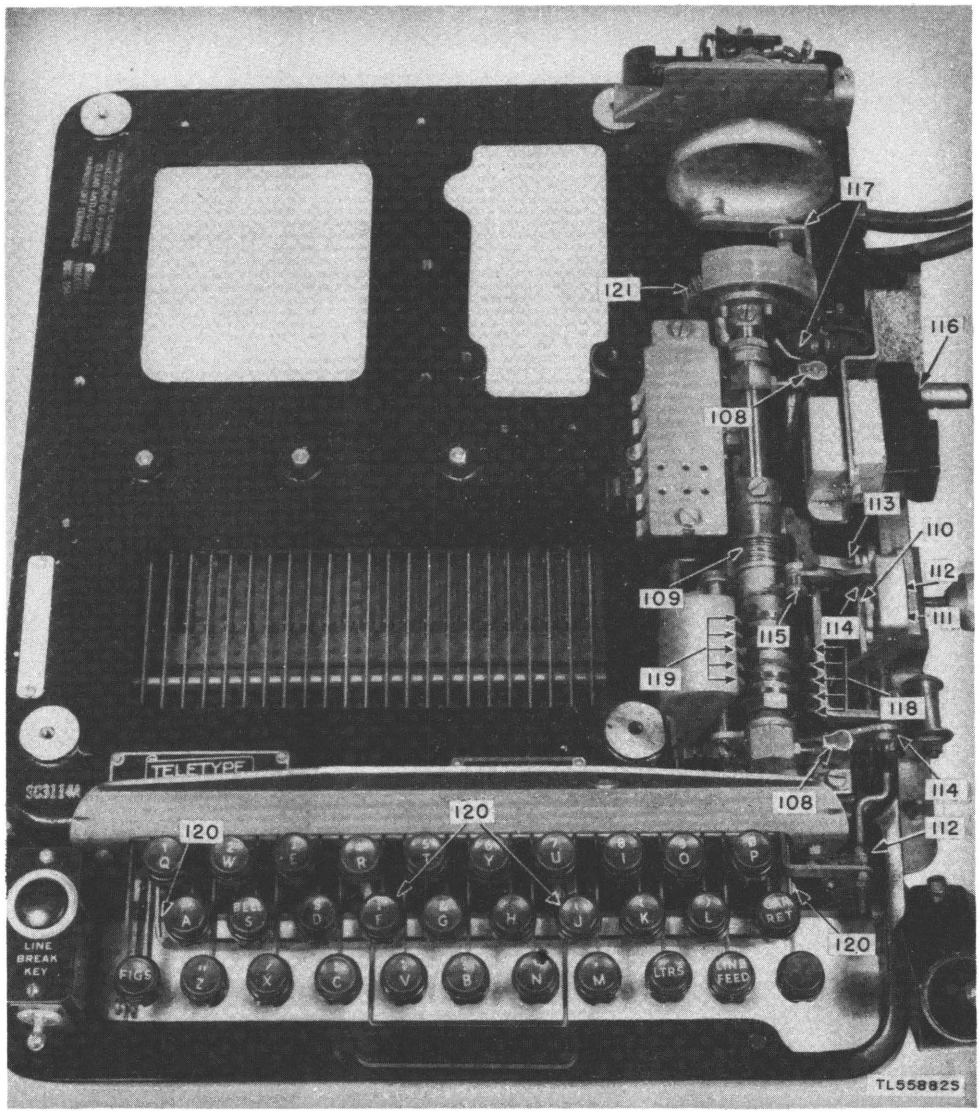

Figure 38. Lubrication points for top of keyboard base.

d. TYPE-BASKET ASSEMBLY.

Item	Fig. No.	Name of part	Lubricant	Method and quantity
201	43	Type bars at segment slot	PS	Pull each type bar down against platen and apply 1 drop.
202	43	Pull bars	PS	1 drop on top of each
203	43	Pull-bar lockout lever on pivot and rollers (2).	PS	1 or 2 drops at each point
204	40	Code-bar locking lever at point of contact with main bail.	GL	Apply sparingly
205	43	Code bars at posts	PS	1 or 2 drops
206	40	Code-bar bell cranks on wearing surfaces	PS	1 or 2 drops
207	39	Ribbon-feed ratchet and feed gears teeth	PS	Apply sparingly

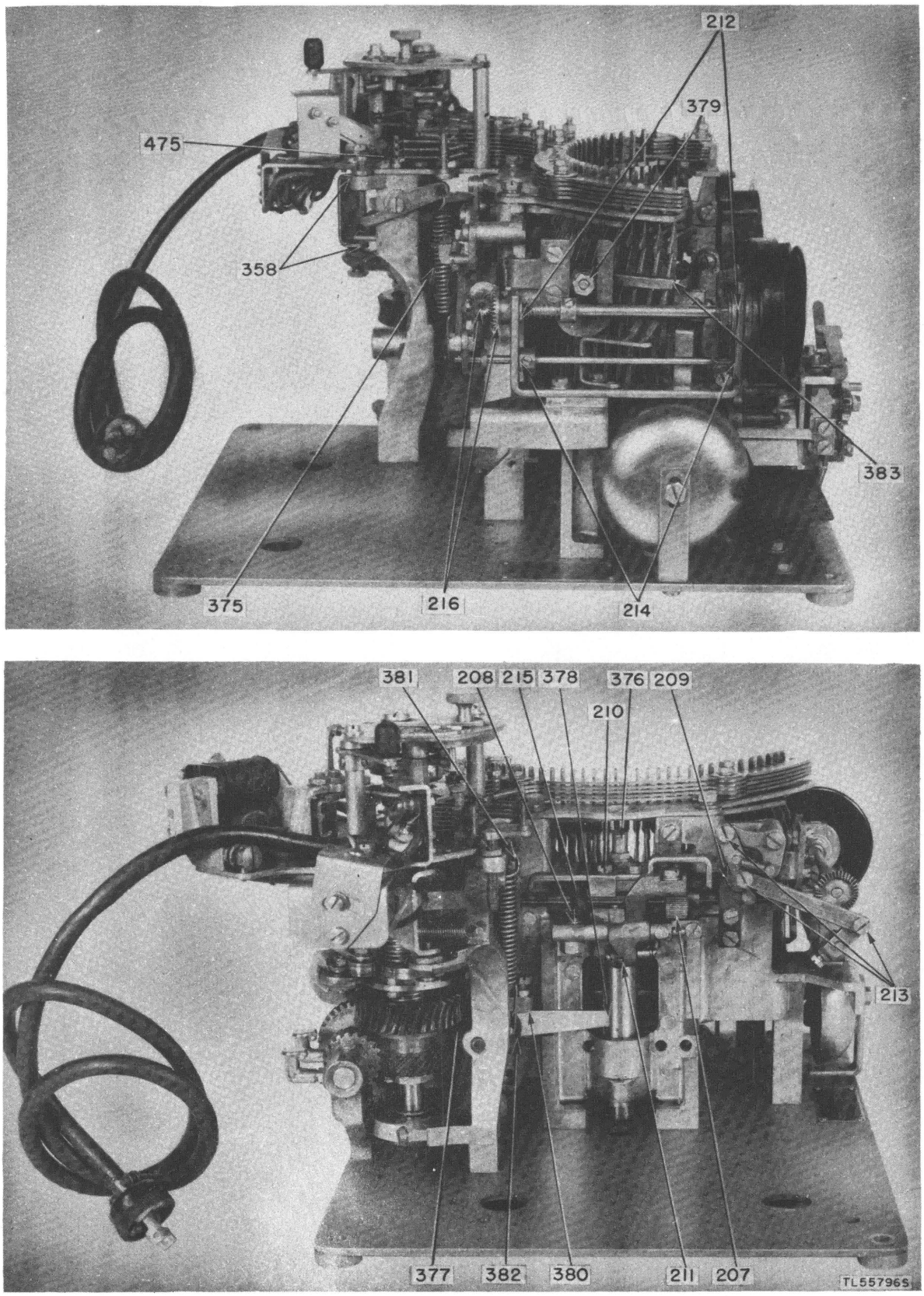

Figure 39. Lubrication points, right side and back of type-basket assembly.

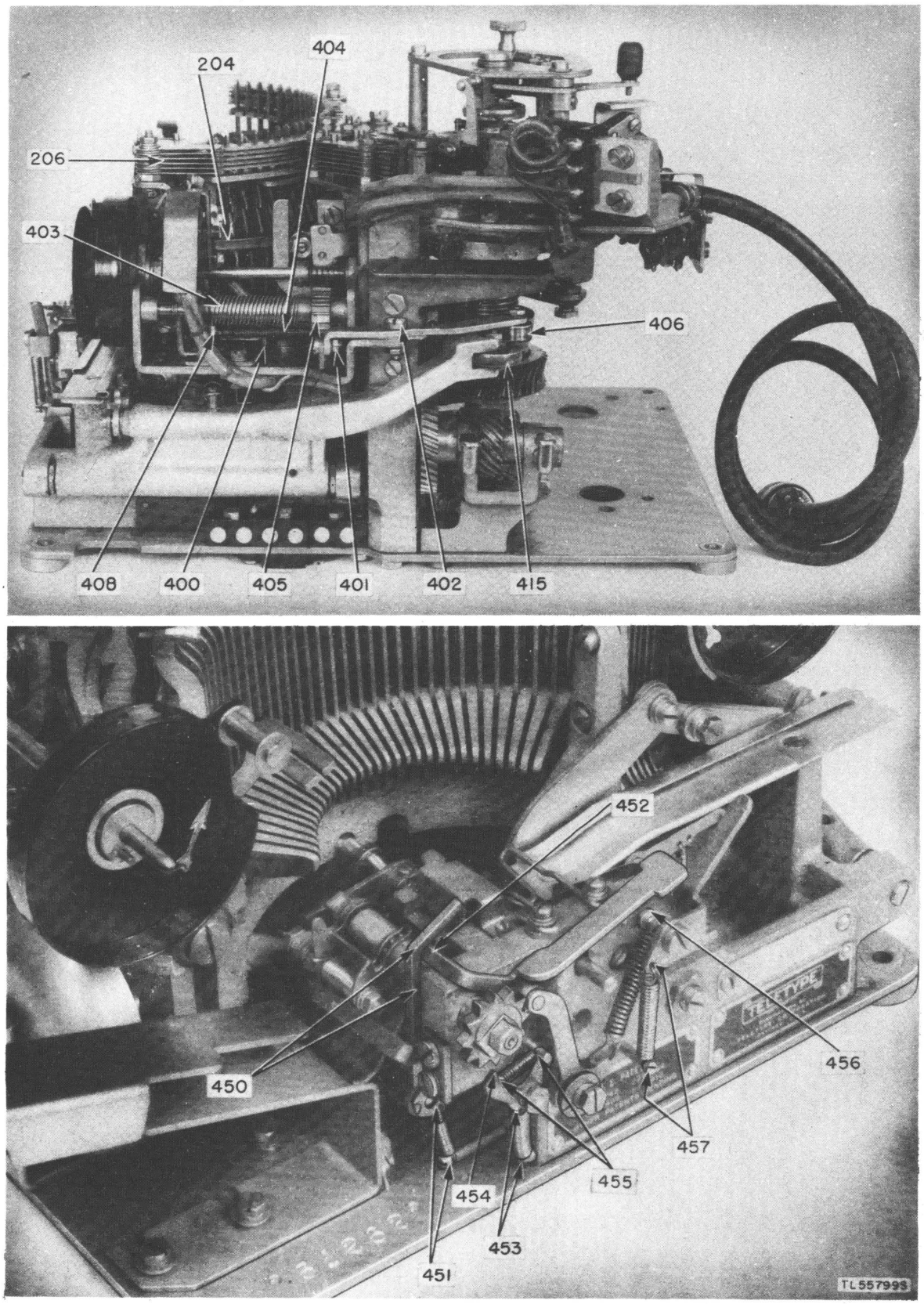

Figure 40. Lubrication points, backspace and tape feed-out mechanism.

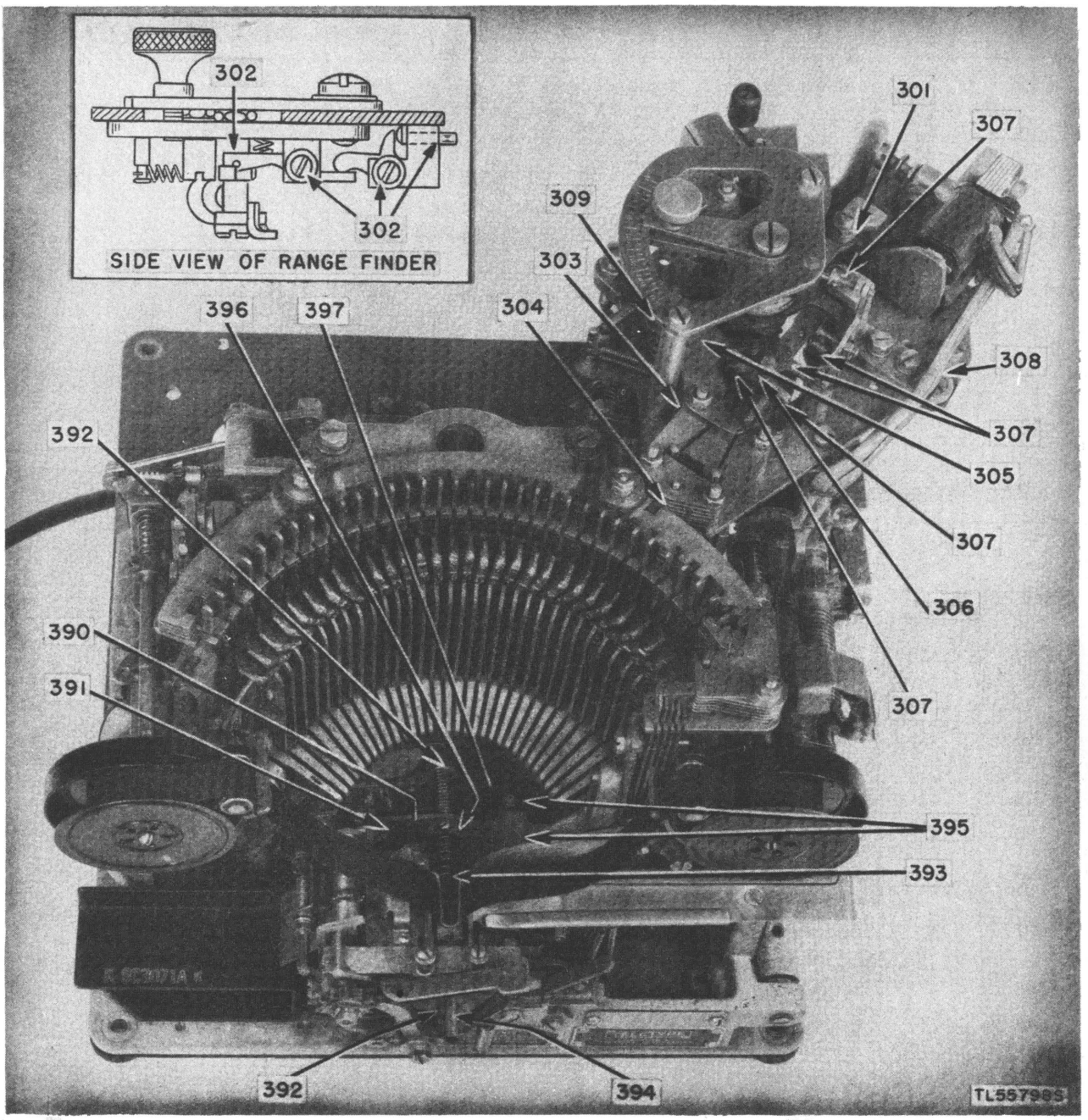

Figure 41. Lubrication points, selector and platen mechanisms.

d. TYPE-BASKET ASSEMBLY—*Continued.*

Item	Fig. No.	Name of part	Lubricant	Method and quantity
208	39	Ribbon-feed shaft detent plunger	PS	1 or 2 drops
209	39	Ribbon-feed shaft (2 oil holes)	PS	Apply sparingly
210	39	Ribbon-feed lever oil hole	PS	Apply sparingly
211	39	Ribbon-feed lever roller	PS	1 or 2 drops
212	39	Ribbon-spool shafts on bushings (remove spools) (2).	PS	2 or 3 drops
213	39	Ribbon-reverse pawls and links on bearings (4).	PS	Apply sparingly
214	39	Ribbon-reverse shafts, upper and lower bearings.	PS	1 or 2 drops
215	39	Ribbon-feed shaft detent	GL	Apply sparingly

e. TYPING REPERFORATOR UNIT. (1) *Selector assembly.*

Item	Fig. No.	Name of part	Lubricant	Method and quantity
301	41	Armature bearings (2)	PS	1 or 2 drops
302	41	Trip-latch plunger, trip latch, bell-crank lever, and stop lever of range-finder assembly.	PS	1 or 2 drops
303	41	Swords and selector levers between separating plates.	PS	1 or 2 drops
304	41	Selector T-levers, small points of contact	PS	1 or 2 drops
305	41	Armature locking lever at pivot	PS	1 or 2 drops
306	41	Locking wedge at point of engagement with locking lever.	PS	1 or 2 drops
307	41	Selector arm on pivot screws (2), sword contact points (2), and detent.	PS	1 or 2 drops on each point
308	41	Selector-arm operating-screw head	PS	Apply sparingly
309	41	Locking lever on separator surface	PS	1 or 2 drops

(2) *Main shaft.*

Item	Fig. No.	Name of part	Lubricant	Method and quantity
351	42	Main shaft	PS	Remove range scale near mounting screw, swing scale out of the way. Remove the retaining disk. Fill the shaft. Replace retaining disk. Replace range scale and its rear screw.

(2) *Main shaft—Continued.*

Item	Fig. No.	Name of part	Lubricant	Method and quantity
352	42	Locking-lever cam, felt washer on selector-cam assembly.	PS	1 or 2 drops
353	42	Selector-cam sleeve on each cam peak	PS	1 or 2 drops
354	42	Selector-cam friction washers	PS	Saturate
355	42	Main cam friction disk	PS	Saturate
356	42	Main-shaft upper ball bearing	GL,PS	Apply 1 or 2 drops of PS, turn shaft; apply thin coat of GL; turn shaft a few turns; apply 1 or 2 drops of PS
357	42	Main-shaft lower ball bearing	GL,PS	Same as above
358	39	Clutch throw-out lever at ends of lever and at pivots.	GL	Apply sparingly
359	42	Clutch sliding member	PS	Oil freely
360	42	Spring which compresses friction washers of selector-cam assembly.	PS	Apply sparingly to coils (oil will flow between prongs of nut on main shaft and friction disk which engages this nut).
361	42	Main-shaft gear	GL	Apply sparingly
362	42	Main-bail cam	GL	Apply sparingly
363	42	Punch-arm cam	GL	Apply sparingly
364	42	Main-shaft clutch spring	PS	Apply sparingly
365	42	Spring which compresses friction washers of cam unit.	PS	Apply sparingly
366	42	Keyboard spiral gear	PS	Apply sparingly

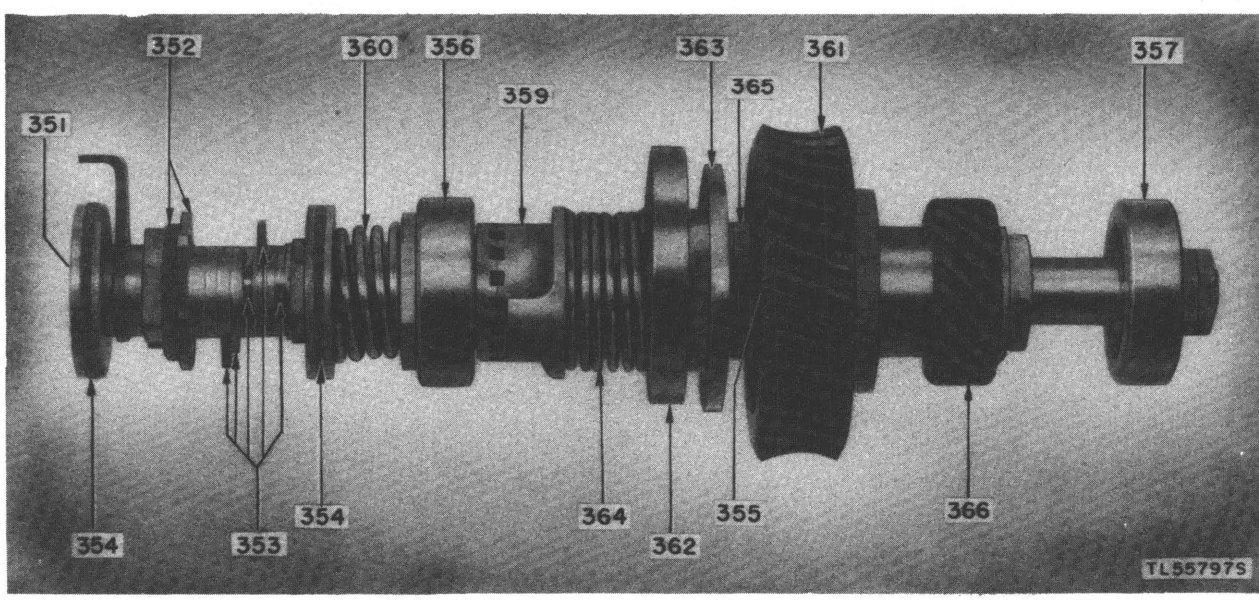

Figure 42. Lubrication points of main shaft.

(3) *Main bail.*

Item	Fig. No.	Name of part	Lubricant	Method and quantity
375	39	Main-bail roller	GL	Apply sparingly
376	39	Main-bail plunger	PS	Fill oil cup and saturate wick
377	39	Main-bail lever oil cup just above terminal block.	PS	Fill cup
378	39	End of lever in main-bail plunger	PS	Apply sparingly
379	39	Main-bail guide and groove on main bail	GL	Apply sparingly
380	39	Main-bail adjusting screw	GL	Apply sparingly
381	39	Main-bail spring anchor	GL	Apply sparingly
382	39	Main-bail lever spring post	PS	Saturate washers
383	39	Groove in main bail	PS	Fill

(4) *Platen mechanism.*

Item	Fig. No.	Name of part	Lubricant	Method and quantity
390	41	Shift rocker fork	PS	1 or 2 drops
391	41	Shift rocker and shift rocker lever pivot bearings (2).	PS	Apply sparingly
392	41	Platen-shaft bearings (2)	PS	1 or 2 drops
393	41	Platen-block shaft bearing	PS	1 or 2 drops
394	41	Platen-guide shaft bearing	PS	1 or 2 drops
395	41	Shift lever bearings (2)	PS	1 or 2 drops
396	41	Shift lever where it comes in contact with shift bell crank	PS	1 or 2 drops
397	41	Shift bell-crank guide	PS	1 or 2 drops

(5) *Tape feed-out mechanism.*

Item	Fig. No.	Name of part	Lubricant	Method and quantity
400	40	Worm-follower bail shaft and follower bail (2).	PS	1 or 2 drops
401	40	Feed pawl	PS	1 or 2 drops
402	40	Cam-lever roller pivot	PS	1 or 2 drops
403	40	Worm shaft	GL	Apply sparingly
404	40	Detent drag spring	GL	Apply sparingly
405	40	Feed ratchet	GL	Apply sparingly
406	40	Cam-lever roller surface	GL	Apply sparingly
407		Counter control magnet armature bearings (2).	PS	Apply sparingly
408	40	Worm-follower shoulder screw bearing	PS	1 or 2 drops
409		Tape-out magnet armature lever bearing	PS	1 or 2 drops

(6) *Mechanical end-of-line indicator mechanism.*

Item	Fig. No.	Name of part	Lubricant	Method and quantity
440	40	Worm shaft and release bail - 2 bearings each (see item 400).	PS	1 or 2 drops
441	40	Feed pawl (see item 401)	PS	1 or 2 drops
442	40	Cam-lever roller pivot (see item 402)	PS	1 or 2 drops
443	40	Worm shaft (see item 403)	GL	Apply sparingly
444	40	Detent drag spring (see item 404)	GL	Apply sparingly
445	40	Feed ratchet (see item 405)	GL	Apply sparingly
446	40	Cam-lever roller surface (see item 406)	GL	Apply sparingly

(7) *Reperforating mechanism.*

Item	Fig. No.	Name of part	Lubricant	Method and quantity
415	40	Punch-arm casting roller	GL	Apply sparingly
416	43	Punch-arm casting bearings in oil holes (2).	PS	Apply sparingly
417	43	Punch-bail adjusting-link bearings (2).	PS	Apply sparingly
418	43	Punch-bail pilot-screw bearings (2)	PS	Apply sparingly
419	43	Punch-bar bell-crank bearings and at slot in punch bars.	PS	1 or 2 drops
420	43	Vertical-lever bell-crank bearings and at points of contact with punch-bar bell cranks	OE	1 or 2 drops at each point.
421	43	Vertical-lever lower guide comb slots	PS	1 or 2 drops
422	43	Vertical-lever pivot screw	PS	1 or 2 drops
423	43	Vertical-lever upper guide comb slots	PS	1 or 2 drops
424	43	Code-bar bell cranks at bearing and point of contact with vertical levers and code-bar locking lever (3)	PS	1 or 2 drops
425	43	Punch bars at punch-bail guide comb	PS	1 or 2 drops
426	43	Feed-pawl bearing	PS	1 or 2 drops
427	43	Feed-roll bearing, 2 places	PS	1 or 2 drops
428	43	Feed-roll detent bearing and roller	PS	1 or 2 drops
429	43	Star wheel	GL	Apply sparingly
430	43	Tape-tension lever bearings (2)	PS	Apply sparingly
450	40	Feed-pawl pivot point	PS,GL	Apply oil sparingly; apply grease sparingly to surfaces which contact feed roll and backspace lever
451	40	Feed-pawl spring at spring post and eye in feed hole.	PS	Apply sparingly

(7) *Reperforating mechanism—Continued.*

Item	Fig. No.	Name of part	Lubricant	Method and quantity
452	40	Backspace lever pivot point on surface which contacts feed pawl.	GL	Apply sparingly
453	40	Backspace lever spring at spring post and eye in lever.	PS	2 or 3 drops
454	40	Backspace feed pawl, pivot point which engages star wheel.	GL	Apply sparingly
455	40	Backspace feed-pawl spring, at both spring posts.	PS	Apply sparingly
456	40	Ribbon-lift lever, pivot point	PS	Apply sparingly
457	40	Ribbon-lift lever spring at spring post and eye in lever.	PS	1 or 2 drops
475	39	Clutch-lever contact mechanism (FPR21 only) on surface of the insulator of the contact spring against which the clutch throw-out lever bears and to the corresponding surface of the clutch throw-out lever.	GL	Apply sparingly.

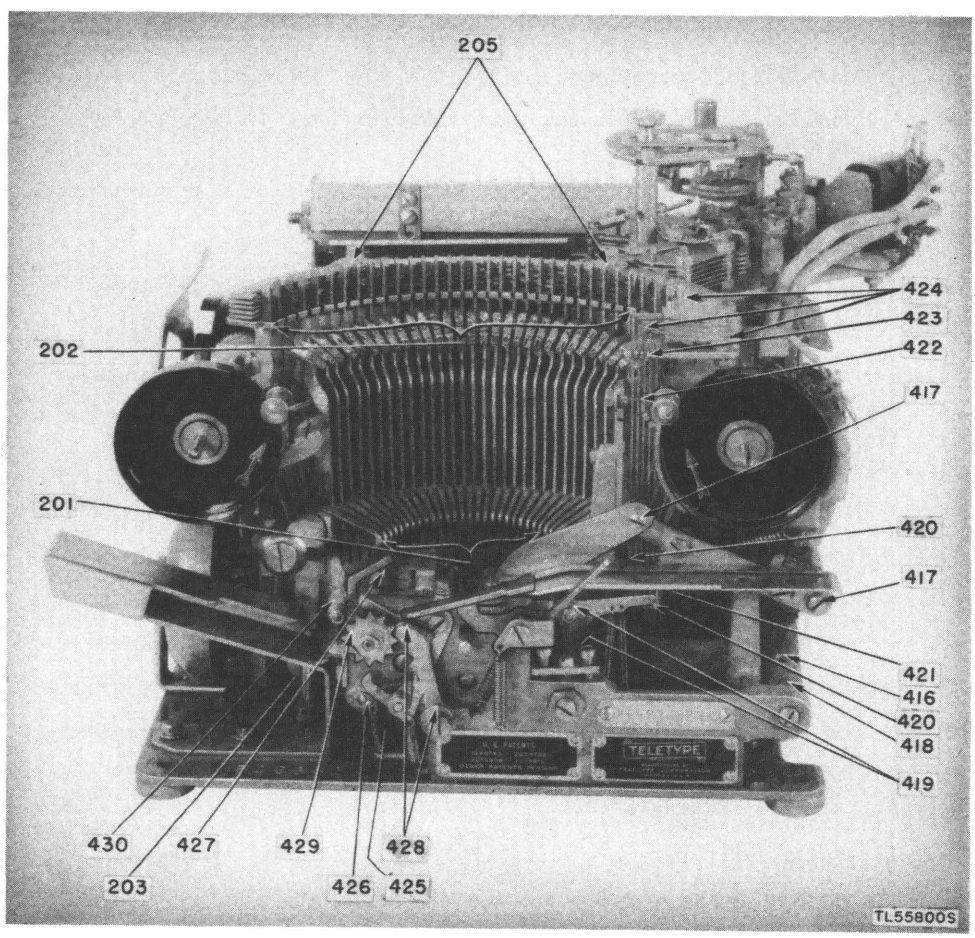

Figure 43. Lubrication points, punch assembly.

f. MOTOR-UNIT BEARINGS. (1) The motor bearings are packed with grease before the motor leaves the factory and under ordinary operating conditions need no additional lubrication until the first lubrication of the equipment. At the regular lubricating intervals check for sufficient lubrication. One or two strokes of the plunger of the gun should apply sufficient grease to each bearing.

(2) To lubricate, press the nozzle of the gun against the ball oiler pressure fitting and force the grease into the hole by pushing on the plunger of the gun. Take care that the bearings are not overloaded. Overloading will result in the grease oozing out of the end castings and being thrown on other parts of the mechanism. After lubricating, run the motor for a few minutes and then wipe off any excess grease that has been forced out of the ends of the castings. Each time that the gun is used for lubricating a motor bearing, first depress the plunger slightly to make sure that grease is delivered.

Section VIII. MOISTUREPROOFING AND FUNGIPROOFING

55. General

a. When equipment is operated in highly humid climates, excessive failure of parts and decreased operating efficiency are usually caused by the accumulated effects of moisture, rather than by inferior parts. Rapid temperature changes accompanied by fog, rain, dew, or high humidity promote such failures.

b. The effects of moisture on resistors, capacitors, coils, and chokes can be recognized in the form of corrosion, low-insulation resistance, flash-overs, and cross-fire. Moisture also accelerates fungus growth which increases these effects.

56. Reducing Failures

a. A moistureproofing and fungiproofing treatment has been devised which, if properly applied, provides a reasonable degree of protection. The treatment consists of applying a film of moisture- and fungi-resistant varnish to all susceptible parts of the equipment. This film provides a nonwetting surface. Equipments which have been treated have been marked with the letters MFP and the date of treatment. Equipments not marked should be examined, and if treatment has not been applied, the equipment should be returned to third or higher echelon maintenance units for treatment.

b. TB SIG 13, Moistureproofing and Fungiproofing Signal Corps Equipment, contains a detailed description of this treatment.

c. Re-treatment may be required after a period of use. Need for this re-treatment is indicated by excessive failures or by the effects listed in paragraph 55*b*.

Note. This equipment is to be given moisture- and fungi-resistant treatment only when it is returned to a rear echelon for other repairs and should be treated by trained teletypewriter repairmen. Since proper operation is dependent upon correct adjustment of the machine, it is essential that these adjustments are not impaired during the treatment.

57. Treating Typing Reperforators

a. PREPARATION. Make all repairs and adjustments necessary for proper operation of the equipment.

b. DISASSEMBLY. When disassembling equipment, do not interchange the components from one machine to another.

(1) Remove typing reperforator cover. (Cover not to be treated.)

(2) Remove four screws holding typing unit to keyboard base and separate from base.

(3) Remove cover over slip-connection block and cover over transmitting contacts on keyboard base. (Covers not to be treated.)

(4) Remove cover from over motor switch, held in place by two screws, to expose break key. (Cover not to be treated.)

(5) Remove shells from red and black plugs of reperforator signal cords held in place by one screw. (Shells not to be treated.)

(6) Lift typing reperforator and set on rear edge.

(7) Remove four screw bushings (for shock

mounts) from bottom of typing reperforator base and remove base plate. (Base plate not to be treated.)

c. CLEANING. Clean all dirt, dust, rust, and fungus from the equipment to be processed. Clean all oil and grease from the surfaces to be varnished.

(1) When the wiring is in good electrical condition but covered with an oil film too heavy to be removed, do not apply coating material to the wiring. If possible, replace the wiring.

(2) When wiring that is faulty or oil-soaked is replaced, treat the new wiring with coating material if the wire has not been treated with a fungicidal lacquer during manufacture.

Caution: Unless cleaning is done very carefully and thoroughly, the effectiveness of the moistureproofing and fungiproofing operation will be impaired.

d. MASKING. No masking of the equipment is required.

e. DRYING. Place equipment in oven or under heat lamps and dry for 2 or 3 hours at a temperature of 160°F.

f. VARNISHING. (1) Use a brush to apply three coats of moistureproofing and fungiproofing varnish (Lacquer, Fungus-resistant, Signal Corps stock No. 6G1005.3, or equal). Allow each coat to air-dry 15 to 20 minutes at the temperature specified (subpar. *e* above) before applying the next coat.

(2) Apply varnish immediately after the equipment is dried. If varnish is not applied immediately, moisture condenses on the equipment. Varnish applied over moisture peels off readily after the varnish has dried.

(3) Apply the varnish by brush to all soldered connections, screw insulation, resistors, capacitors, magnet coils, retardation coil, and all wiring and wiring harness insulation which is free from an oil film.

Caution: Do Not Allow Coating Material To Get On The Electrical Contacts, Commutator Segments, Magnet Pole Faces, Magnet Armature, Or Other Parts With Critical Electrical Or Mechanical Requirements.

g. REASSEMBLY. (1) Reassemble the equipment and test its operation.

(2) Make a complete operational check of the equipment and lubricate if necessary to be sure it is in good operating condition.

(3) If the unit does not operate after reassembly, check the electrical connections for presence of varnish coating. Varnish coating on electrical connections acts as an insulating material. Recheck the reassembly operation; component parts may have been improperly replaced or power leads connected to the wrong terminals.

h. MARKING. Mark the letters MFP and the date of treatment near the motor on the base of the typing reperforator.

Example: MFP—6 Oct 45.

58. Treating Equipment After Repairs

If the coating of protective varnish has been puntured or broken during repair and if complete treatment is not needed to reseal the equipment, brush-coat the affected part. Be sure the break is completely sealed.

PART FOUR

AUXILIARY EQUIPMENT

Section IX. 1A TAPE SPLICER

59. Description

The 1A tape splicer is used to join pieces of chadless message tape to provide a continuous tape for transmission from the transmitter distributor. When the splicer is installed on the top of the typing reperforator (fig. 44), a spring clip at the left of the tape splicer holds the end of the message tape which is in the transmitter distributor, and a coil spring holder holds the ends of message tapes which are to be spliced to the tape in transmitter distributor.

60. Operation

Because splicing is accomplished by pushing three rows of partial perforations (chad lids) in one piece of tape through openings in another piece of tape, the end of the tape to be spliced must be perforated with at least three LETTERS signals. It is important that an opening be provided for each lid in order to avoid errors in transmission and to prevent jamming of the splice in the transmitter. The tapes to be spliced should have square ends.

61. Preventive Maintenance

Little preventive maintenance is required for the tape splicer. Keep the splicer clean and tighten loose screws, bolts, etc., which may be found during a routine preventive maintenance inspection on the typing reperforator.

62. References

For further information on the 1A tape splicer refer to TM 11–2210 and TM 11–2211.

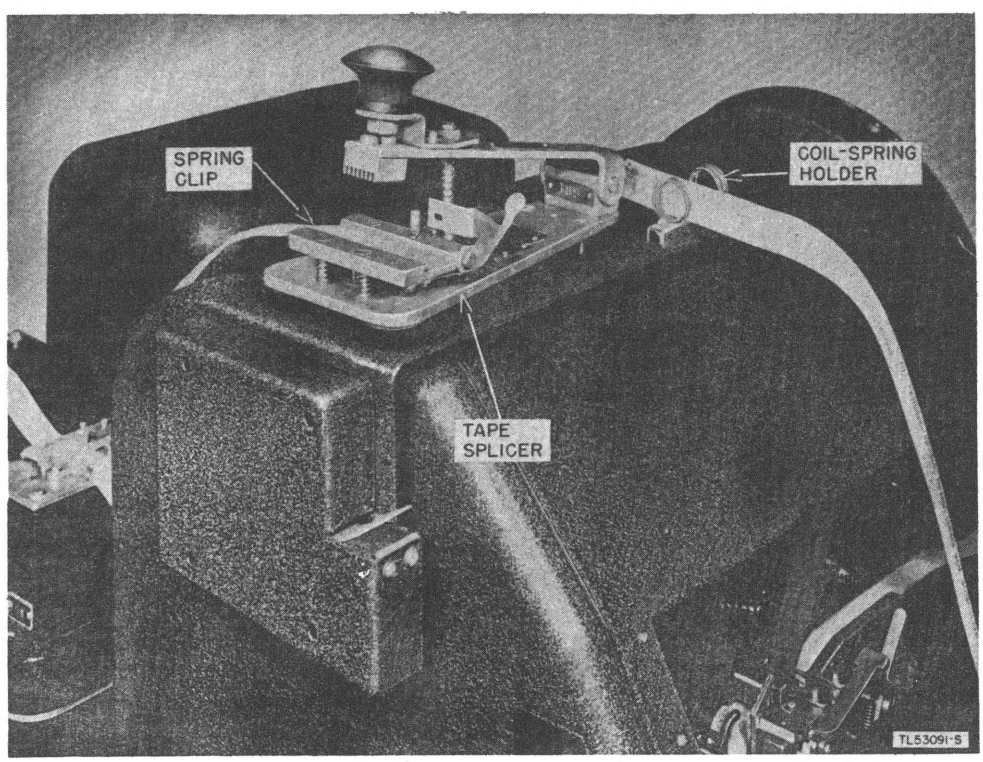

Figure 44. 1A tape splicer.

PART FIVE

REPAIR INSTRUCTIONS

Section X. GENERAL REPAIR PROCEDURE

63. Outline of Repair and Adjustment Procedure

Service failures can be kept to a minimum by careful handling of the equipment during installation, by completing preventive maintenance as specified in part three, and by thoroughly investigating and correcting all troubles which are encountered. When service faults are discovered, a definite plan of corrective maintenance procedure will reduce both the length of time the equipment is in trouble and the amount of work required to complete the repairs. An outline of the information furnished in part five for assistance in locating and correcting defects in various parts and circuits follows:

a. DETAILED FUNCTIONING OF EQUIPMENT. Section XI includes a complete detailed explanation of the purpose and operation of the various parts and circuits. An understanding of how the various mechanisms function will greatly assist in determining when the equipment is operating correctly and when it requires repairs or when it is not practical to attempt repairs and therefore should be replaced.

b. TOOLS AND TEST EQUIPMENT. Sections V and XII describe the tools and test equipment normally required to accurately check all of the clearances, spring tensions, speed of rotation, and other adjustments to determine that the entire typing reperforator is functioning properly.

c. TROUBLE LOCATING. Section XIII describes methods of isolating and locating different troubles and provides step-by-step analysis procedures in the form of trouble analysis charts.

d. REPAIR AND REPLACEMENT. Section XIV furnishes recommended procedures for the repair and replacement of those parts and units which experience the most wear.

e. REQUIREMENTS AND ADJUSTMENTS. Section XV groups in one section all of the test requirements and adjustment values required to make a complete check and adjustment of entire typing reperforator mechanism.

64. Unsatisfactory Equipment Report

a. WD AGO FORM 468 (WAR DEPARTMENT UNSATISFACTORY EQUIPMENT REPORT) FOR EQUIPMENT USED BY ARMY GROUND FORCES AND TECHNICAL SERVICES. WD AGO Form 468 will be filled out and forwarded through channels to the Office of the Chief Signal Officer, Washington 25, D. C., when trouble occurs more often than is normal, as determined by qualified repair personnel.

b. AAF FORM 54 (UNSATISFACTORY REPORT) FOR EQUIPMENT USED BY ARMY AIR FORCES. AAF Form 54 will be filled out and forwarded to Commanding General, Air Materiel Command, Wright Field, Dayton, Ohio, in accordance with AAF Regulation 15–54, when trouble occurs more often than is normal, as determined by qualified repair personnel.

Section XI. DETAILED FUNCTIONING OF EQUIPMENT

65. Introduction to Detailed Functioning of Equipment

a. This section explains in detail the purpose and functional operation of the various parts and assemblies of model 14 typing reperforators. Appropriate illustrations and reference diagrams are included to clarify the different operations which combine to change

the action of typing on the keyboard into particular groups of electrical impulses, also the related operations which in turn translate the electrical impulses into the message appearing on tape in both typewritten characters and code perforations. Information in this section is intended particularly to assist in setting up and following through the complete sequence of functional operation of each part or subassembly describing how each rotates or moves to accomplish a given purpose. To simplify the tracing of successive and overlapping actions and functions a number of step-by-step sequence-of-operation charts are furnished. While the information given in this section parallels in some respects the information given in the requirements and adjustment section (section XV), the purposes of the two sections differ. All the test and adjustment procedures involved in repairing typing reperforators have been grouped together in the requirements and adjustments section for ready reference when repairing equipment. No testing or adjusting data is furnished in this detailed functioning of equipment section, its purpose being to describe the function of each part or subassembly of the equipment.

b. The information furnished in the individual paragraphs of this section applies, generally, to all typing reperforators in normal operating condition and with necessary power supplies and signal circuits connected. Information is not furnished on all the possible modifications and optional features which might be encountered when typing reperforators are connected with teletypewriter equipment used by foreign nations.

c. When information is required on the basic features of the start-stop five-unit teletypewriter code, including the fundamental plan of synchronism on which satisfactory operation of teletypewriter systems depends, refer to the applicable paragraphs in section II.

66. Detailed Functioning of Equipment References

Refer to the general index in this manual for references to individual parts; the function of each part or subassembly is listed either by name or under that larger assembly or unit which bears the closest physical relationship.

67. Basic Principles of Operation

a. FIVE-UNIT START-STOP TELETYPEWRITER CODE. Refer to paragraphs 15 and 16 for illustrations and explanation of the various combinations of impulses transmitted from the keyboard base and received by the typing reperforator unit.

b. SYNCHRONISM. Refer to paragraph 18 for discussion of the relationship between the speed of the motors, gears used, and the start-stop features of the teletypewriter code, all of which must be coordinated before the receiving mechanism and transmitting mechanism will operate in unison, thus insuring that the impulses will be received and translated correctly. The detailed descriptions and operation of the selector-cam sleeve given in paragraph 70 include an explanation of the part played by the design of the selector-cam sleeve in synchronizing the receiving mechanism to the incoming code impulses.

68. Motor Unit

a. DESCRIPTION AND PURPOSE. (1) The motor unit includes a motor, a filter for radio-interference suppression, external resistors (if required), a governor adjusting bracket, and in some cases a lamp for illuminating the governor (governed series motors only), all mounted on a metal base.

(2) The purpose of the motor unit is to supply mechanical power, through the rotation of the main shaft, to the various power-driven parts of the keyboard base (sending mechanism) and typing reperforator unit (receiving and printing mechanisms) and to control the speed at which the parts will move.

b. OPERATION. The synchronous motor will operate continuously at its rated speed as long as the necessary power supply of 105 to 125 volts ac is connected to it. The governed series motor will operate continuously at 1,800 rpm as long as either ac or dc of 105 to 125 volts is connected to it. The use of a tuning fork with the target on the rim of the governor to test the speed of the motor is discussed in paragraph 29. After it has been determined by test that the governed series motor is running either too slow or too fast, the speed-adjusting wheel on the governor is turned until the desired speed is secured.

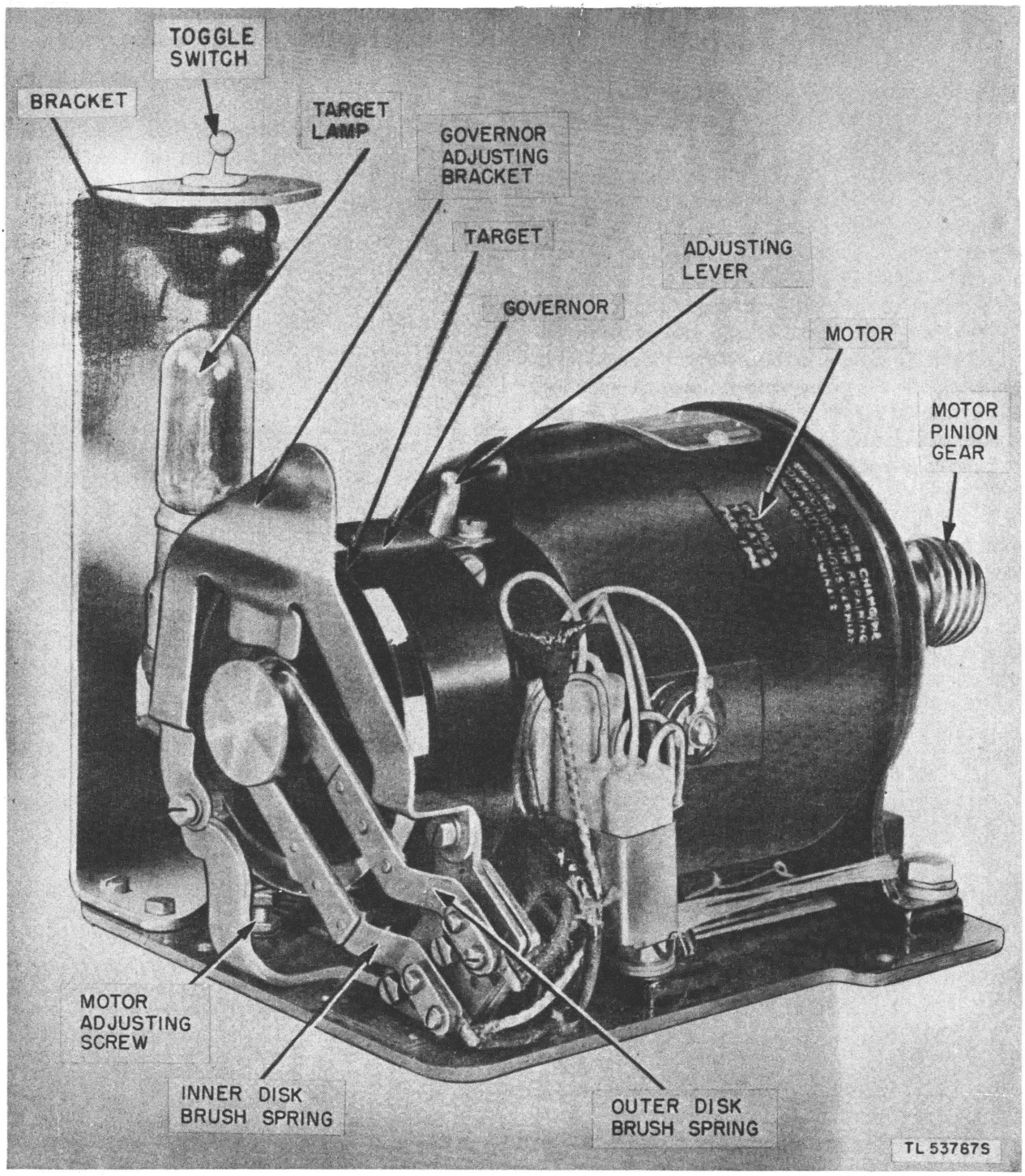

Figure 45. Motor unit.

69. Governor

a. DESCRIPTION AND PURPOSE. (1) The governor (fig. 47) is attached to the end of the motor shaft, opposite the end which mounts the pinion. It resembles the flywheel of an ordinary motor. The governor contact arm (fig. 47) consists of a bent strip of metal with a contact mounted on one end and fastened by a flat spring at the other end. A speed-adjusting wheel extends through the governor cover

and is turned by means of the governor adjusting bracket and speed-adjusting lever. A target of alternate black and white spots is painted around the outer rim of the governor and is used with a speed indicator (tuning fork) to check the motor speed visually. When viewed through the shutters of the speed indicator, the spots on the target should appear stationary.

(2) The governor and an associated resistor connected across the governor contacts control the speed of the motor.

b. OPERATION. (1) The contact-arm spring holds the contact against the companion contact until the centrifugal force of the contact arm overcomes the tension of the spring. When the contacts open, a resistance is connected into the motor circuit (fig. 46) increasing its resistance, thereby reducing the current and the speed of the motor. The closing ond opening of the contacts keeps the motor speed constant to the value of the tension at which the spring is set. Figure 46 is a schematic diagram of a typical governed series motor circuit. When the contacts are closed the circuit may be traced from terminal 13 through the armature, through the motor winding, through the contacts, through the choke coil, and to terminal 15. When the contacts are open the circuit is from terminal 13 through the armature and motor winding, through the 250-ohm resistor, and to terminal 15.

(2) When the governor contacts are closed the resistor is short-circuited and the full external voltage supply is applied to the motor windings; this results in an increase in the motor speed.

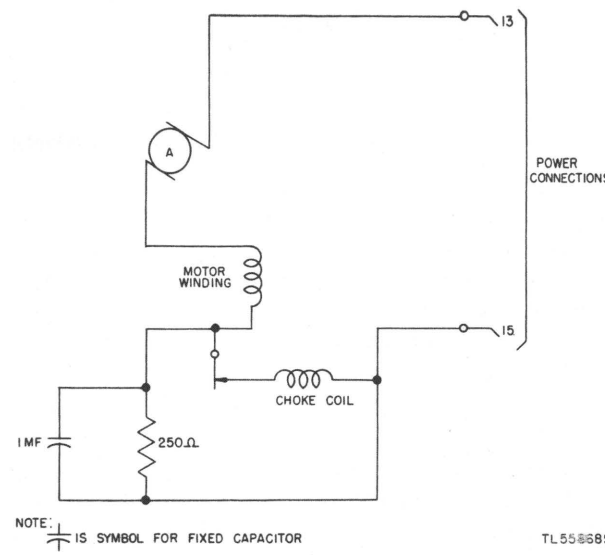

Figure 46. Schematic diagram of motor circuit.

(3) The speed at which the governor contacts open and close is controlled by the degree of tension in the contact-arm spring. The speed of the motor is regulated by turning the speed-adjusting wheel, to which the contact-arm spring is rastened, in a direction which will increase or decrease the tension of the spring.

70. Main-Shaft Assembly

a. DESCRIPTION AND PURPOSE. The main-shaft assembly mounted in a vertical position below the range finder is an assembly of gears, bearings, cams, and clutches arranged to distribute power from the motor to the mechanically-operated parts of the typing reperforator. The complete assembly determines the

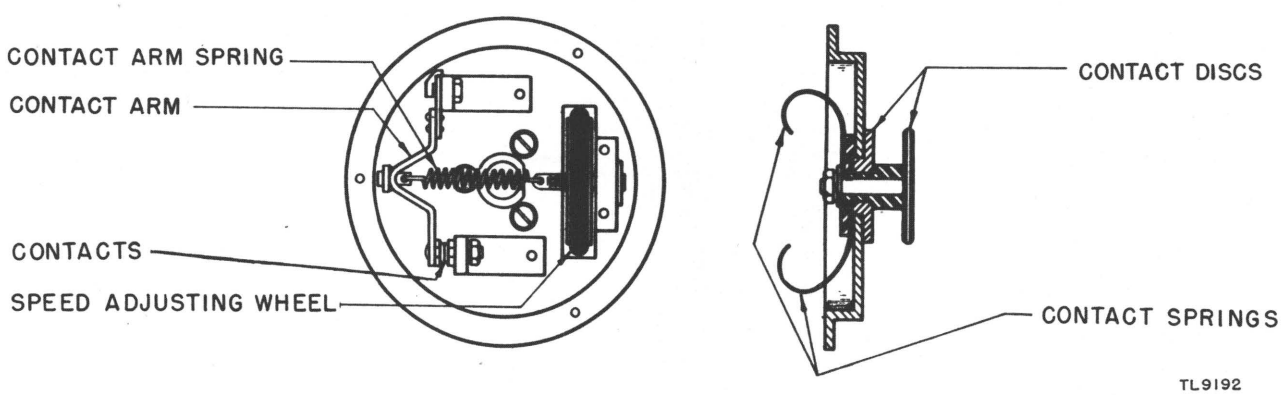

Figure 47. View of governor.

speed of rotation and timing of the various cam actions in both the keyboard transmitter and the typing reperforator unit.

b. OPERATION. Meshing of the main-shaft gear, located near the bottom of the shaft, with the motor pinion gear (fig. 63) results in continuous rotation of the main shaft when the motor is turning. Power is then distributed from the shaft to the various parts of the typing reperforator through clutches, cams, and gears. (See fig 48.) The selector-cam sleeve fitted over the top end of the main shaft provides power for the selector unit through the medium of a friction clutch formed by two pairs of steel disks separated by a felt washer. The selector unit controls the operation of the main-shaft clutch and operation of the main-shaft clutch causes the main-bail cam and the punch-arm cam to rotate with the main shaft. The main-bail cam provides power for all functions of the receiving unit except selecting, perforating, and spacing. The punch-arm cam operates the punch arm in the typing reperforator unit. When the typing reperforator is mounted on a keyboard base, power to operate the keyboard mechanism is distributed from the motor to the keyboard transmitting shaft through the transmitting-shaft driving gear located near the lower end of the main shaft.

71. Keyboard Base (Transmitting Unit)

a. DESCRIPTION AND PURPOSE. (1) The transmitting unit on the keyboard base includes the sending contacts and all the associated mechanism required to change the keylever action into a group of five marking and spacing

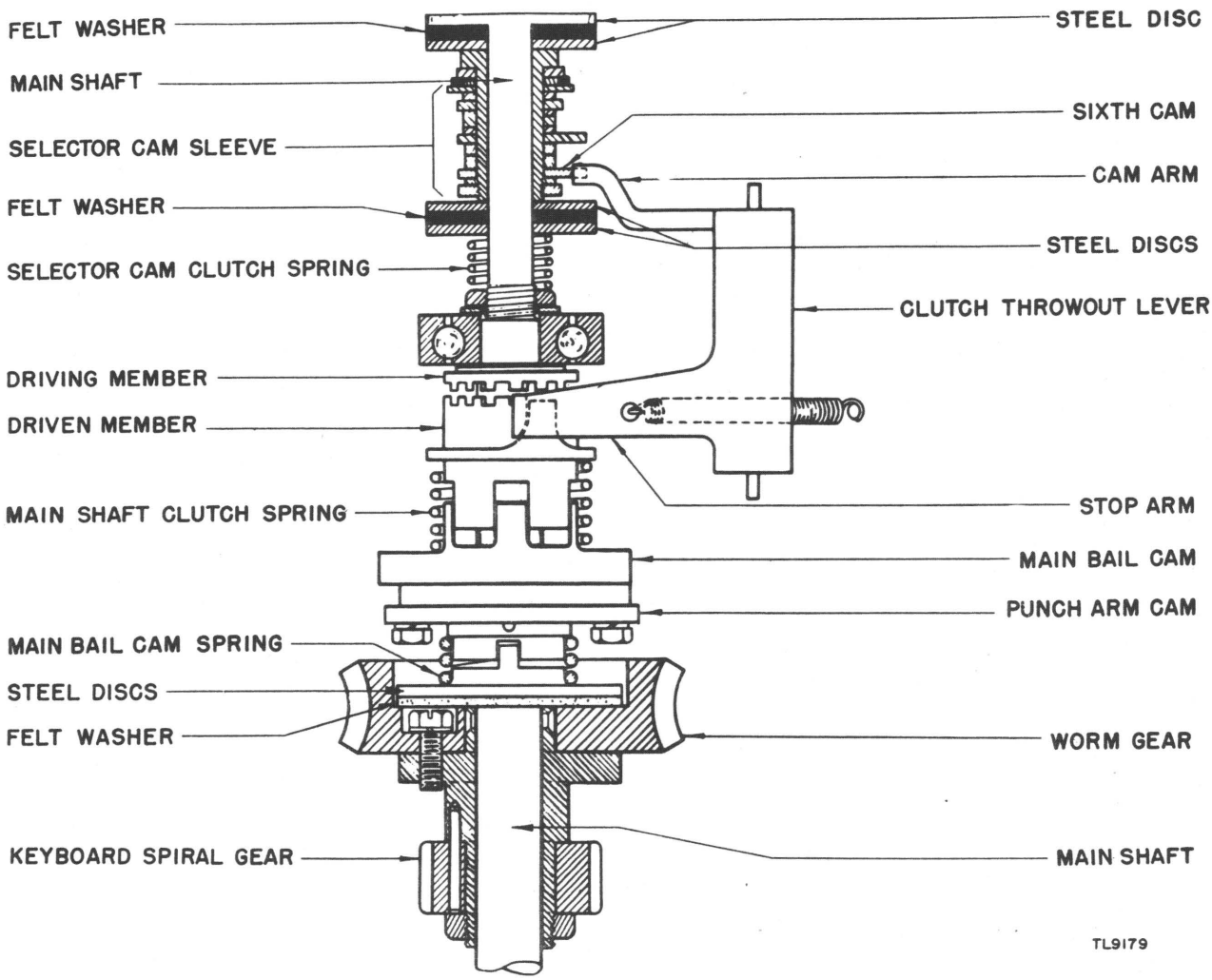

Figure 48. Cross section of main shaft.

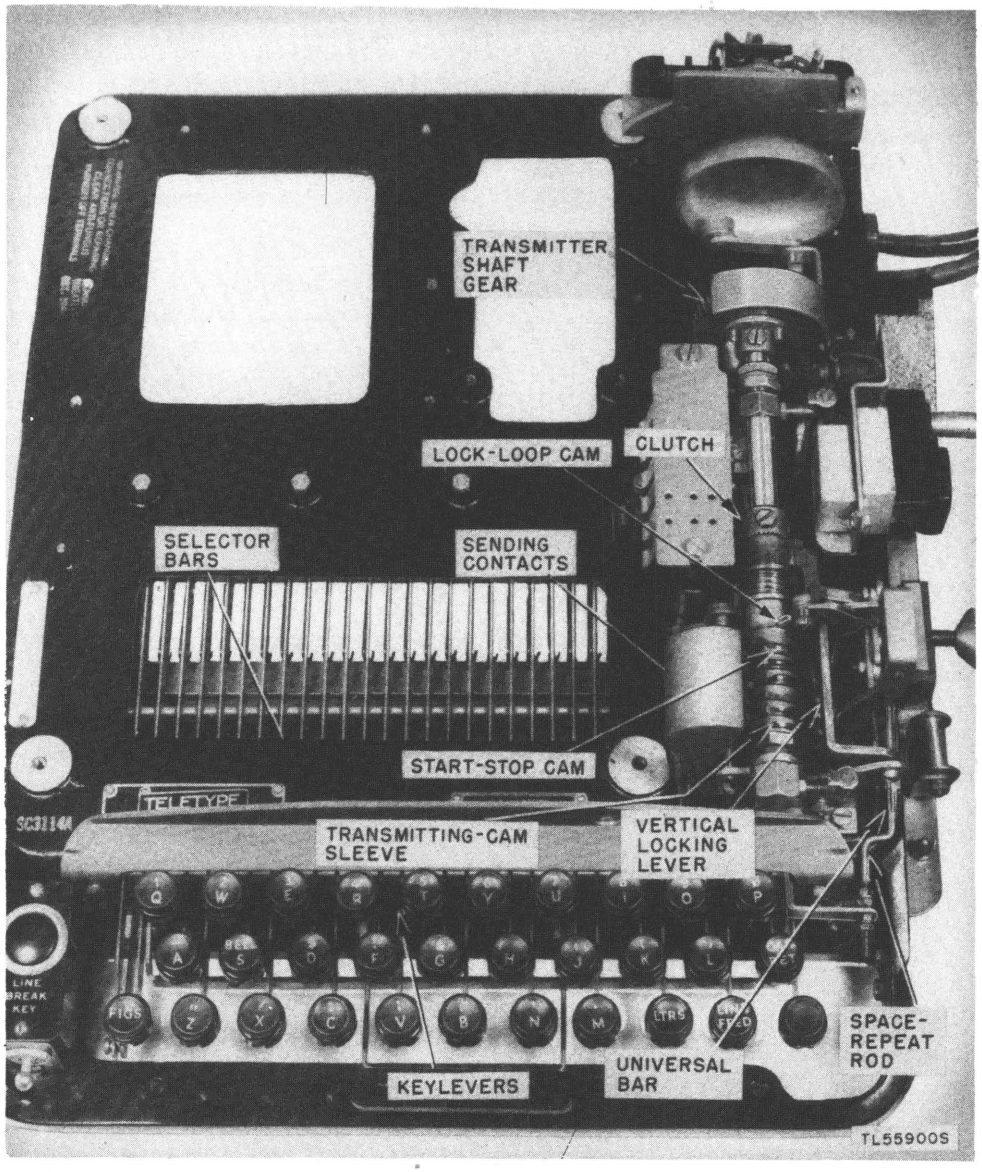

Figure 49. Keyboard base of typing reperforator.

impulses preceded by a start impulse and followed by a stop impulse. Through the meshing of the transmitter-shaft gear (fig. 49) with the transmitter-shaft driving gear on the main shaft (fig. 48), the motor furnishes the power to operate the moving parts of the transmitting mechanism (keyboard transmitter) and determines the speed with which they operate.

(2) The purpose and operating action of the transmitting-cam sleeve, selector bars, universal bar, vertical locking lever, start-stop and lock-loop cams, and space-repeat feature are described in separate paragraphs of this section.

b. OPERATION. The transmitting cams normally are held stationary because the clutch members (driven and driving) on the transmitting driving shaft are held apart by the clutch throw-out lever. When either a key or the space bar is depressed, the driven member of the clutch moves into mesh with the driving member, causing the transmitting cams to revolve and thereby open and close the sending contacts. At the end of the revolution, the driven member of the clutch is disengaged by the clutch throw-out lever and the transmitting cams stop until the next key or space bar is depressed. (See fig. 50.)

72. Transmitting-Cam Sleeve

a. DESCRIPTION AND PURPOSE. The seven cams in the keyboard transmitting unit are arranged as a single cam sleeve mounted on the transmitting shaft. (See fig. 50.) Each cam is round in shape and has a notch which receives an extension on the related contact lever. The driven clutch member is slipped over the transmitting shaft and is connected to the transmitting-cam sleeve by long notches which are covered by the clutch spring. The clutch spring provides the tension to push the driven

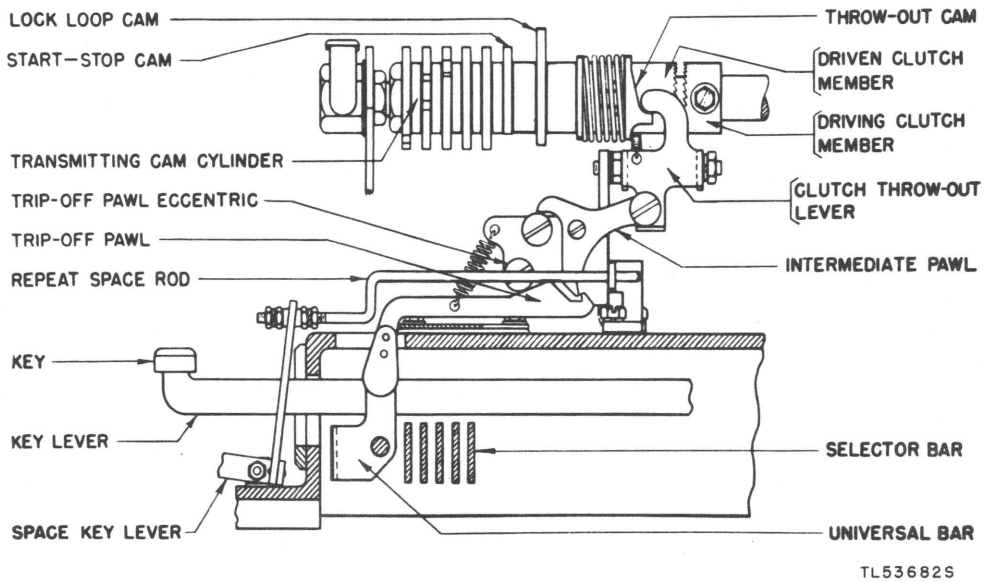

Figure 50. Cross-section of keyboard.

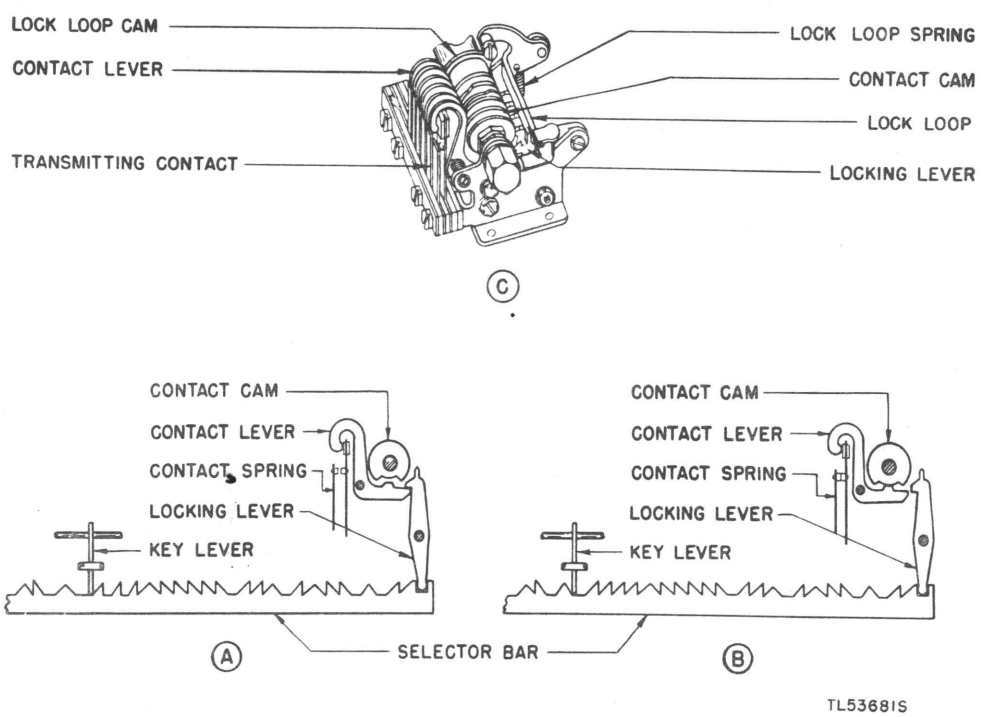

Figure 51. Vertical locking lever.

clutch into engagement with the driving clutch when the clutch throw-out lever is riding on the high part of the throw-out cam. When engaged, the driving clutch member furnishes the necessary power to revolve the transmitting cams. The design and mounting of the cams is such that the start, marking, spacing, and stop impulses transmitted by the sending contacts are of the desired length.

b. OPERATION. When the depression of a key or the space bar permits the driven clutch member to move into mesh with the driving clutch member, the transmitting-cam sleeve immediately starts to revolve. This forces the individual cams one after the other to operate the sending contact on the related contact lever.

73. Selector Bars

a. DESCRIPTION AND PURPOSE. Beneath the keylevers are five selector bars extending across the width of the keyboard. The selector bars are provided with saw-tooth notches, there being a set of notches (one in each of the five bars) for each letter or symbol. The bars are notched in such a manner that the keylever action on each notch in the set will move each bar to send a space or mark impulse setting up the five space and mark combinations required by the signaling code for each letter or symbol. The selector bars rest on rollers and are guided at each end so that they may be easily moved endwise to engage and position the vertical locking levers.

b. OPERATION. When either a key or the space bar is depressed, the key levers strike the slanting sides of the selector bar notches. The downward pressure on these saw-tooth notches moves the selectors bars either to the right or to the left depending on whether the impulses corresponding to the bars are to be spacing or marking impulses. Each selector bar engages a vertical locking lever near its right end and positions the lever to correspond with the code impulse to be transmitted.

74. Universal Bar

a. DESCRIPTION AND PURPOSE. The universal bar (figs. 49 and 50) is mounted on pivots and extends horizontally across the bottom of the keyboard unit. All keys and the space bar strike it when they are depressed. The universal bar, which is connected through the trip-off pawl to the clutch throw-out lever, controls the starting of the sending cams.

b. OPERATION. When any key or the space bar is depressed, in addition to setting the selector bars by moving them to the right or to the left as described in paragraph 73 preceding, it also causes the universal bar to rotate on its pivots in such a manner that the trip-off pawl operates the intermediate pawl which releases the clutch throw-out lever, and the sending cams (fig. 50) start turning.

75. Vertical Locking Levers

a. DESCRIPTION AND PURPOSE. Each of the five vertical locking levers is mounted with its lower end firmly engaging a recess in the right end of a selector bar. (See fig. 51.) The vertical locking lever is designed to control the movement of the contact lever, leaving the contact lever free to close its contact when a marking signal is to be sent, locking the contact lever so that it cannot close its contact when a spacing signal is to be sent.

b. OPERATION. When the selector bar moves the vertical locking lever to the right for a marking impulse, the locking lever does not interfere with the movement of the contact lever. (See fig. 51.) As the contact lever, riding on the periphery of the turning cam, moves into the cam indent the contact lever closes its contact, sending a marking impulse. When the selector bar moves the upper end of the vertical locking lever to the left for a spacing impulse, the locking lever engages the contact lever (fig. 51), preventing it from rising into the cam indent and thus holding the circuit open for that impulse. As the five transmitting cams turn, the impulses, either marking or spacing, are transmitted in succession.

76. Start-Stop Cam

a. DESCRIPTION AND PURPOSE. The start-stop cam (figs. 49 and 50), which has the same general appearance as the other starting cams, controls the sixth contact lever which opens and closes a contact to produce both the start and stop impulses.

b. OPERATION. The start-stop contact is opened at the beginning of each revolution of the cam shaft to transmit the start (spacing)

impulse and is held open during the transmission of the five selecting impulses. After the fifth selecting impulse has been transmitted, the start-stop contact is closed, sending the stop (marking) impulse to the line. The contact remains closed until a key or space bar is depressed and the transmitting cycle is started again.

77. Lock-Loop Cam

a. DESCRIPTION AND PURPOSE. The lock-loop cam (fig. 50) is slightly larger than the other cams and is located on the end of the transmitting-cam sleeve nearest the clutch. This cam and the associated lock-loop control the keyboard locking levers in such manner that no key can be operated until the previous signal has been transmitted.

b. OPERATION. When the operation of positioning the vertical locking levers has been completed and the transmitting-cam sleeve starts turning, the lock-loop cam moves the lock loop to its down position which holds the locking levers in position while the impulses are being transmitted. As the transmitting-cam sleeve completes its revolution, the lock-loop cam releases the lock loop which in turn releases the locking levers. The keys and space bar may then be operated to set up a new selection.

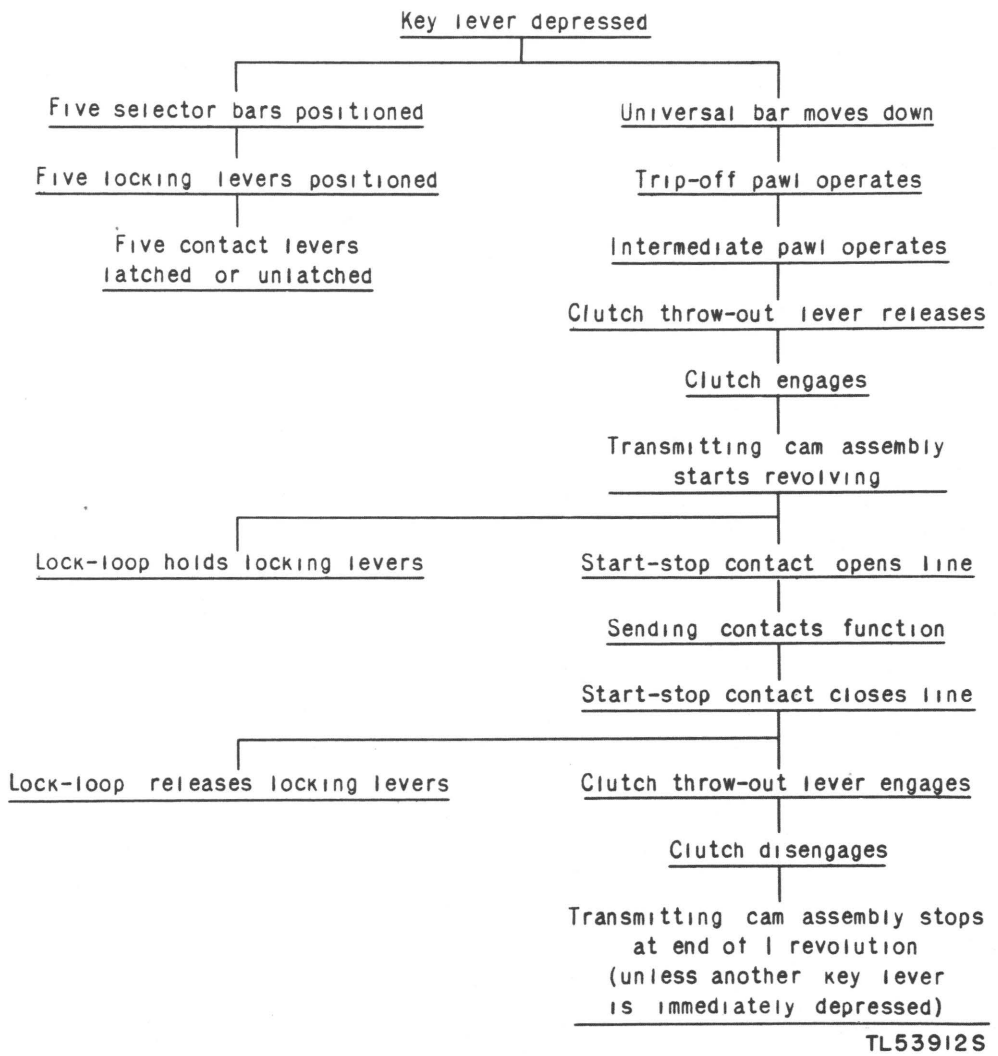

Figure 52. Sequence chart for keyboard functioning.

78. Sequence Chart for Keyboard Functioning

Figure 52 is a chart showing the sequence of operation for the parts and subassemblies of the keyboard transmitting unit as described in preceding paragraphs of this section.

79. Space Repeat.

a. DESCRIPTION AND PURPOSE. The keyboard is equipped with a space-repeat device which permits the transmission of continuous spaces as long as the space bar is depressed. The space-repeat rod is the connecting link between the space keylever and the intermediate pawl.

b. OPERATION. When the space keylever is depressed, a space-repeat rod (fig. 50) which is connected to the space keylever extension will rotate the intermediate pawl. (See fig. 50.) The intermediate pawl, in turn, will hold the clutch throw-out lever out of engagement with the throw-out cam on the clutch driven member. Thus the transmitting-cam sleeve will be permitted to revolve continuously until the space keylever is released. (For instructions on the adjustment of the space-repeat device refer to section XV.)

c. OPERATION FOR SINGLE SPACE. Normally when the space bar is depressed the space-repeat rod attached to the space keylever extension (fig. 50) actuates the intermediate pawl which in turn holds the clutch throw-out lever out of engagement with the projection on the driven clutch, and the transmitting-cam sleeve can revolve continuously until the space bar is released. When adjusted for a single space, the space bar functions in the same manner as the keylevers and must be released and again depressed for each space.

80. Typing Reperforator Unit

a. DESCRIPTION AND PURPOSE. The typing reperforator unit includes in one assembly all the mechanism required to convert code impulses into a typewritten and code-perforated message tape. In describing the detailed functioning of the various parts and subassemblies of the typing reperforator unit, individual functions which occur as a train of actions are grouped together.

b. OPERATION. The functional operations discussed in paragraphs 80 to 106 concerning the typing reperforator unit may be summarized as follows: All mechanically-operated parts of the typing reperforator unit receive their driving power from the main-shaft assembly which is directly connected through the main-shaft gear to the pinion located on the end of the motor shaft. (See fig. 53.) As long as the motor is running, power is immediately available through the various clutches, cams, and gears to move and rotate the various parts of the typing reperforator unit at the speed required to synchronize their action with the code impulses received by the selector magnet. The selector magnet through the associated selecting mechanism determines which type bar is to be thrown against the platen, causing a character or symbol to be printed, and which punch selector fingers (par. 81) will be positioned to perforate the tape.

81. Selector Unit

The typing reperforator may be equipped with either of two types of selecting mechanisms, the pulling magnet selector or the holding magnet selector. A quick way to ascertain which type of magnet selector is supplied with the typing reperforator is to check the armature of the selector. If the selector is constructed so that one end of a large spring is attached to the armature and the other end is anchored to an adjusting screw, the selector supplied is a pulling magnet selector. The holding magnet selector does not have an armature spring. The detailed functioning of each type of selector is discussed below.

a. PULLING MAGNET SELECTOR UNIT. (1) *Description and purpose.* The selector unit located on the top right side of the typing reperforator unit (figs. 53, 54, 55, and 57) consists of a selector magnet, a selector armature (with armature spring), five selector levers, five swords, five T-levers, a selector mounting plate with posts and springs, and the range-finder assembly. The selector mechanism is designed to translate the marking (current) and spacing (no-current) impulses received from the line into mechanical motion which causes the code bars on the top of the type basket to be positioned in accordance with the character or function assigned to each combination of five selecting impulses. The selector mechanism is controlled by the armature of the se-

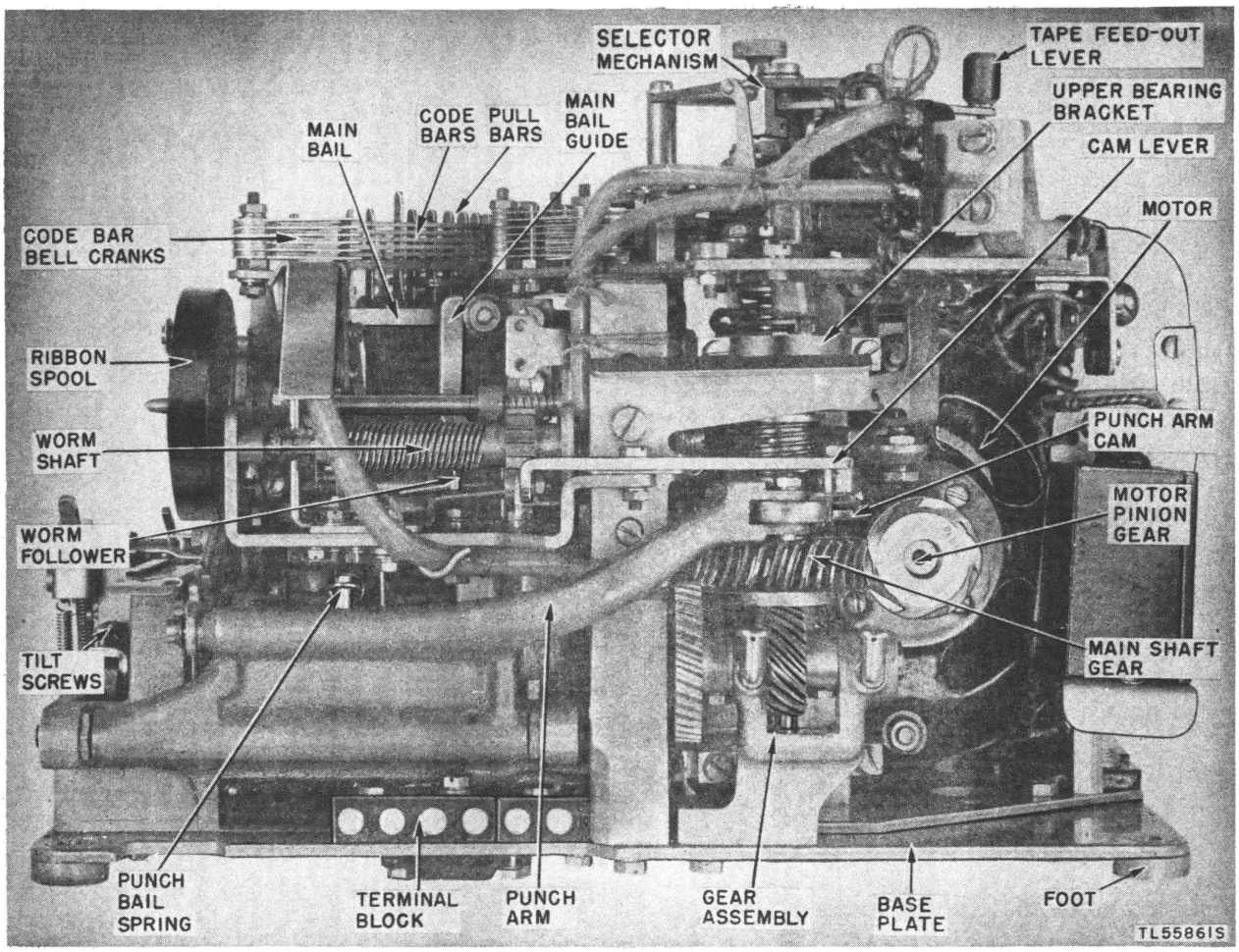

Figure 53. Side view of typing reperforator unit.

lector magnet which receives the code impulses from the line. Normally, the armature of this magnet is pulled up and the stop arm is against the stop lever which in turn is held by the trip latch. Because the stop arm which is a part of the selector-cam sleeve is engaged with the stop lever (fig. 54) the cam sleeve does not revolve.

(2) *Operation.* Each selecting cycle is preceded by a no-current or *start* impulse. When a start impulse is received the armature is released and pulled away from the magnet pole pieces by the armature spring. The armature spring causes the head of the trip-off eccentric screw to depress the trip-latch plunger (fig. 55) thereby actuating the bell crank. The bell crank pivots downward on the right end of the trip latch raising its left end. The trip latch is moved out of engagement with the stop lever which releases the stop arm, alowing the selector-cam sleeve to revolve with the main shaft. Each code bar is positioned by a selector cam through the medium of a selector lever, sword, and T-lever. (See fig. 56.)

b. HOLDING MAGNET SELECTOR UNIT. (1) *Description and purpose.* The holding magnet selector (figs. 57 and 58) is basically the same as the pulling magnet selector. The holding magnet selector, however, has its armature moved against the magnet by a cam, while the pulling magnet selector has its armature attracted to the selector magnet by magnetism.

(2) *Operation.* The translation of code impulses received from the signal line into mechanical motion is accomplished by the selector magnet, the armature, the selector arm, and the armature cam. (See fig. 58.) The armature

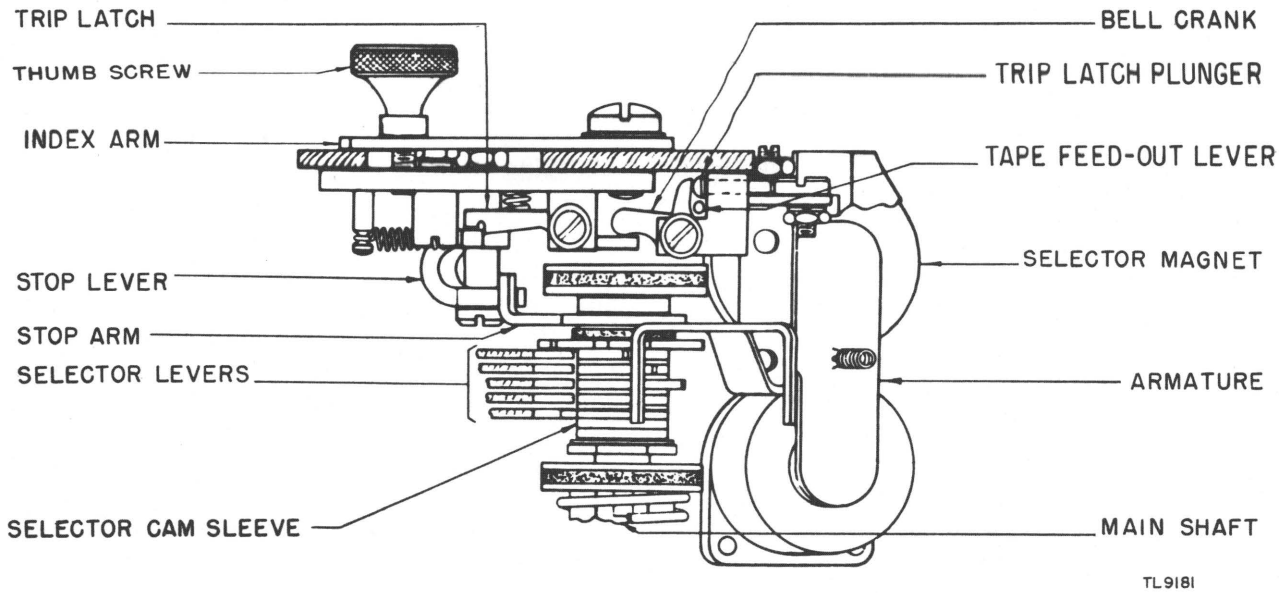

Figure 54. Selector unit (pulling magnet).

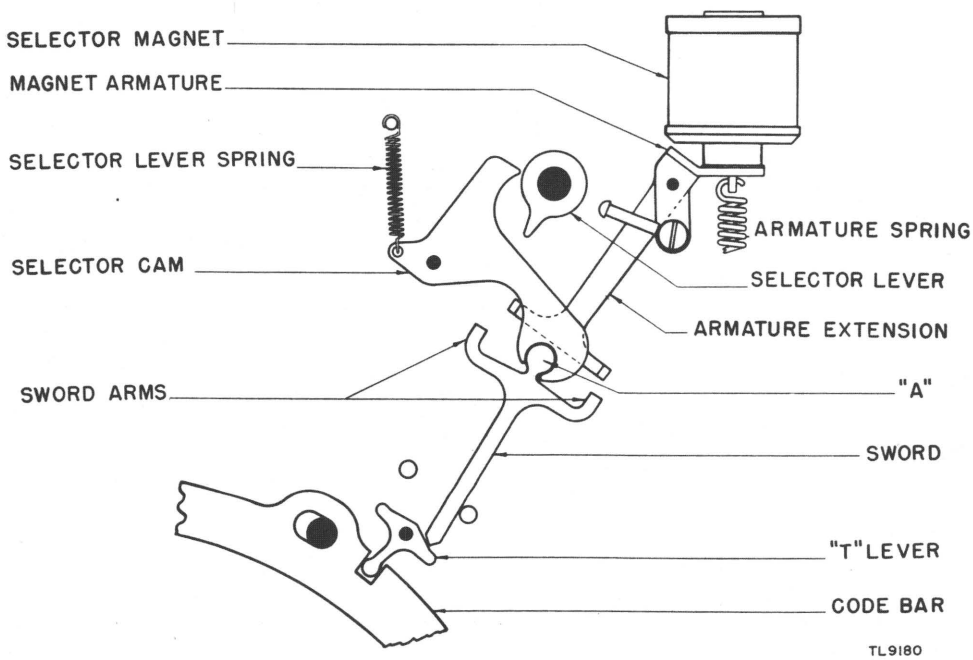

Figure 55. Cross-section of selecting parts (pulling magnet).

extension, which rides on the armature cam, moves the armature against the magnet at the time a signal-line impulse is received. If a current (marking) impulse is received, the armature will be held against the magnet; if a no-current (spacing) impulse is received, the armature will be released from the magnet. The selector arm is actuated by the armature extension because the selector-arm spring makes a yield connection between these two parts. Therefore, instead of the armature extension, the selector arm is used to position the swords on holding magnet selectors. The operation of the swords, T-levers, and code bars is the same

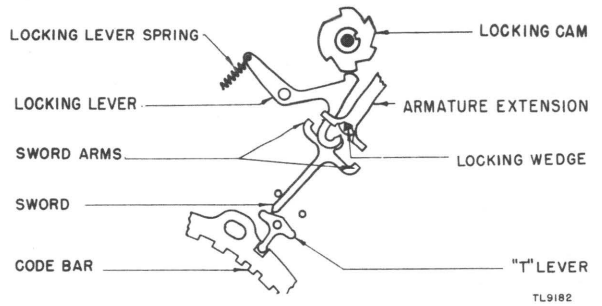

Figure 56. Locking mechanism (pulling magnet).

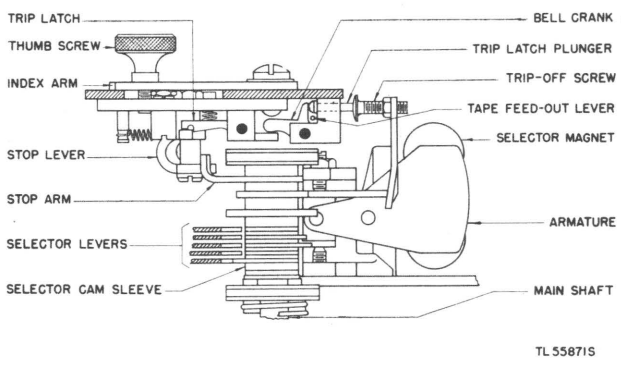

Figure 57. Selector unit (holding magnet).

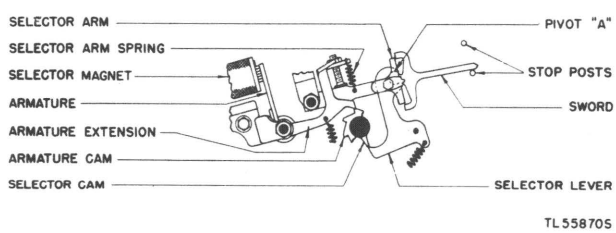

Figure 58. Cross-section of selecting parts (holding magnet).

as described in subparagraph *a* (2) above. The holding magnet selector locking mechanism (fig. 61) operates in a manner similar to the locking mechanism of the pulling magnet selector described above. In the *pulling* magnet selector the armature extension mounts the locking wedge, while in the *holding* magnet selector the selector arm mounts the locking wedge. Because the armature cam starts to move the armature toward the selector magnet before the locking lever releases the selector arm, the selector-arm spring acts as a yield between the armature extension and the selector arm.

82. Example of Selector Unit Operation (Pulling Magnet)

The selector unit operates as follows: Assume the code combination for the letter E is received. Upon the reception of the start (no-current) impulse, the armature moves away from the magnet and actuates the trip-latch plunger (fig. 54), which causes the trip-latch bell crank to move the trip latch out of engagement with the stop lever, releasing the stop arm. The selector-cam sleeve starts to revolve and the No. 1 selector cam engages the No. 1 selector lever during the time that the first (marking or current) impulse of the letter E is being received from the line. The magnet armature is pulled up, bringing the right-hand end of the armature extension up into the path of the right-hand sword arm. When the No. 1 cam engages the No. 1 selector lever, this lever is turned counterclockwise, carrying with it the sword which strikes the right-hand end of the armature extension and is turned clockwise about its pivot (fig. 55, point A). This positions the No. 1 sword so that when the No. 1 cam clears the tip of the No. 1 selector lever, the selector-lever spring will cause the sword to depress the left end of the T-lever, and move the No. 1 code bar to the right. Since no current is received while Nos. 2, 3, 4, and 5 cams are engaging their selector levers, the magnet armature is released and the armature extension moves down so that the left-hand end of the armature extension is in the path of the left-hand sword arm (fig. 56). As the Nos. 2, 3, 4, and 5 cams operate and release their selector levers, the associated code bars either remain in the left-hand position or are moved there by the swords. With the No. 1 code bar to the right and the Nos. 2, 3, 4, and 5 code bars to the left, there will be a notch in each code bar opposite the E pull bar. (Refer to figure 59 for the location of pull bars in relation to code bars.) The pulling magnet armature extension is *locked* while the positioning of each selector sword is taking place and is *unlocked* after the selector cams pass the peaks of their associated selector levers. This is accomplished by a cam-operated locking lever which engages a wedge on the armature extension. (See fig. 56.) The E pull bar is moved toward the code bars by the pull-bar spring. A hooklike projection on the pull bar engages the main bail as it rises,

causing the pull bar to rise with the main bail. This causes the type bar to strike the platen, printing the letter E. A sequence chart for the operation of the selecting mechanism is shown in figure 60.

83. Orientation of Selecting Mechanism (Range Finder)

a. DESCRIPTION AND PURPOSE. (1) Directly associated with the selector magnet is a range-finder assembly. (See fig. 33.) A stop lever, trip latch, index arm, scale, and thumbscrew are the principal parts of the range finder.

(2) For proper operation of the typing reperforator unit there must be a certain time interval between the start of the rotation of the selector-cam sleeve and the time the selector cams operate the selector levers. The purpose of the range finder is to adjust the parts of the selector mechanism to operate in the proper time-interval sequence.

(3) Adjusting the range finder to obtain the most favorable operation of the selecting mechanism may be referred to either as orienting or as taking the range of the typing reperforator.

b. OPERATION. (1) To set the range finder, move the index arm toward one end of the scale until that point is reached at which the reperforator fails to print correctly. Then move the index arm back to the point where the reperforator prints correctly. This is the limit

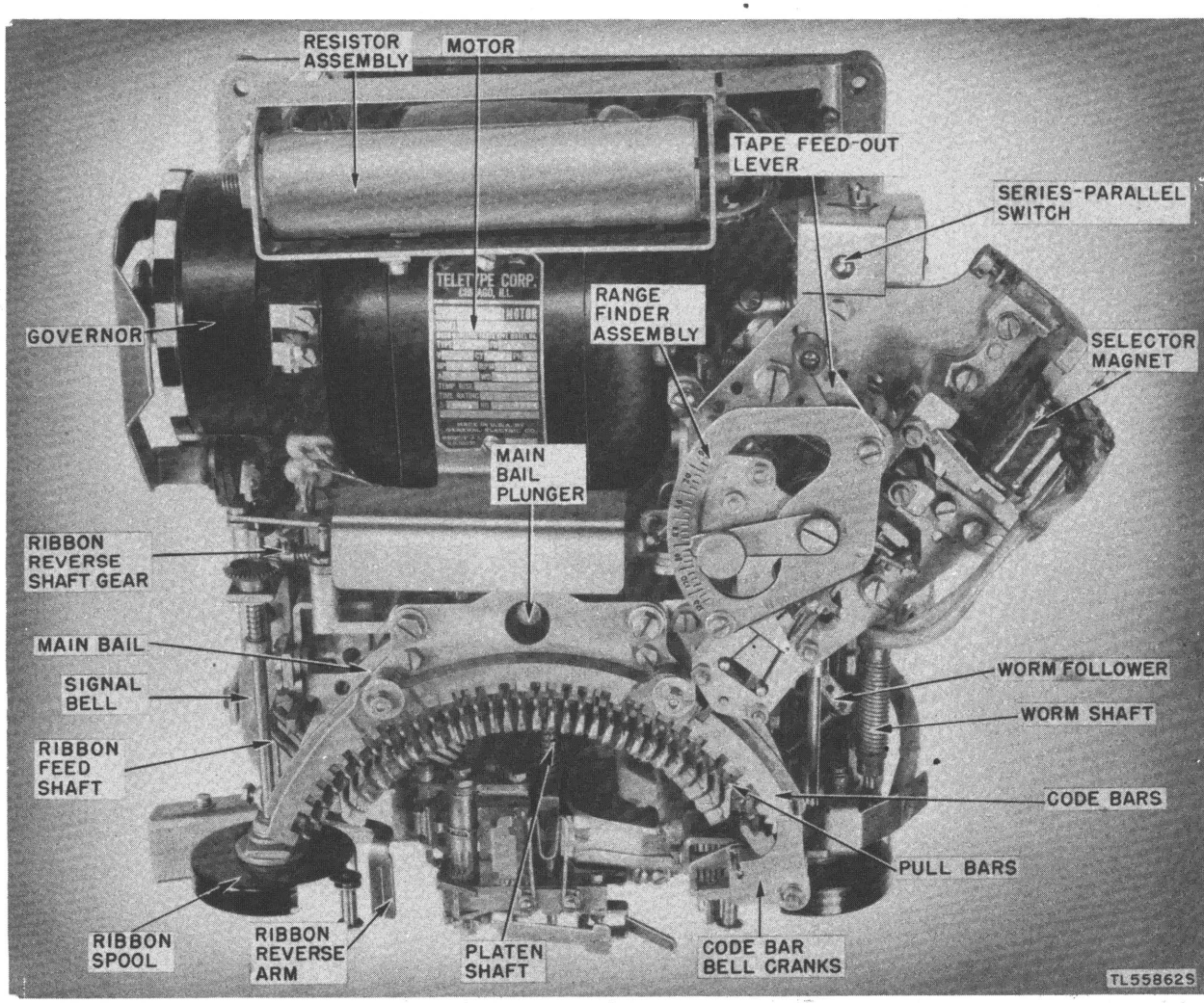

Figure 59. Top view of typing reperforator unit.

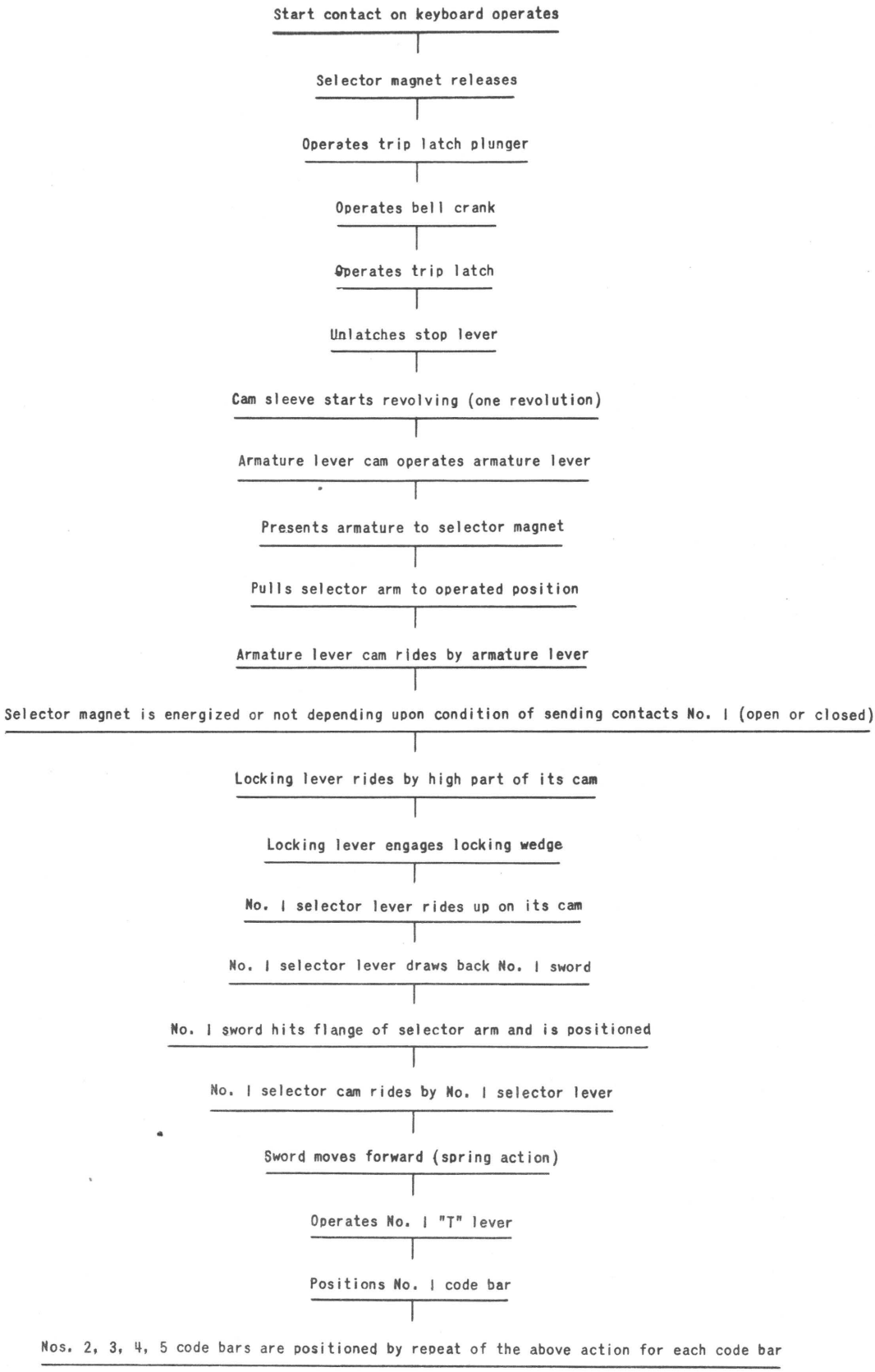

Figure 60. Sequence chart for selecting mechanism. TL 55834S

of the range in each direction. Midway between these points is the position most suitable for operating the selector mechanism in the proper time-interval sequence.

(2) Moving of the index arm positions the stop lever (fig. 54) and selector cam sleeve to have the selector cam operate the selector lever when its related signal impulse is received by the selector magnet. Set to its correct position, the stop lever blocks the stop arm on the selector-cam sleeve at the end of each five selecting impulses.

(3) The index arm is held, when set, by a thumbscrew. Refer to paragraph 32 for information on when and how to test and set the range finder.

84. Locking Cam and Locking Lever

a. DESCRIPTION AND PURPOSE. The locking cam has five high and five low portions on its periphery against which the locking lever is held by its spring (fig. 61). The purpose of the cam and locking lever is to hold the armature extension (or the selector arm) firmly in position while the sword is being positioned.

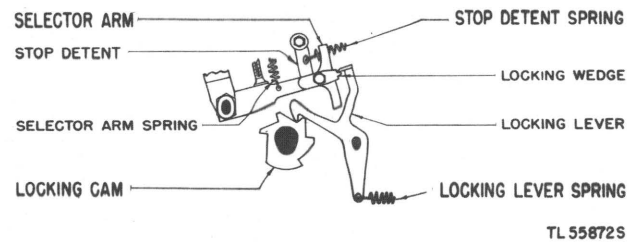

Figure 61. Locking lever operation.

b. OPERATION. During the part of the code impulse that the selector cam is operating the selector lever and the sword is being positioned by striking one of the armature extension arms

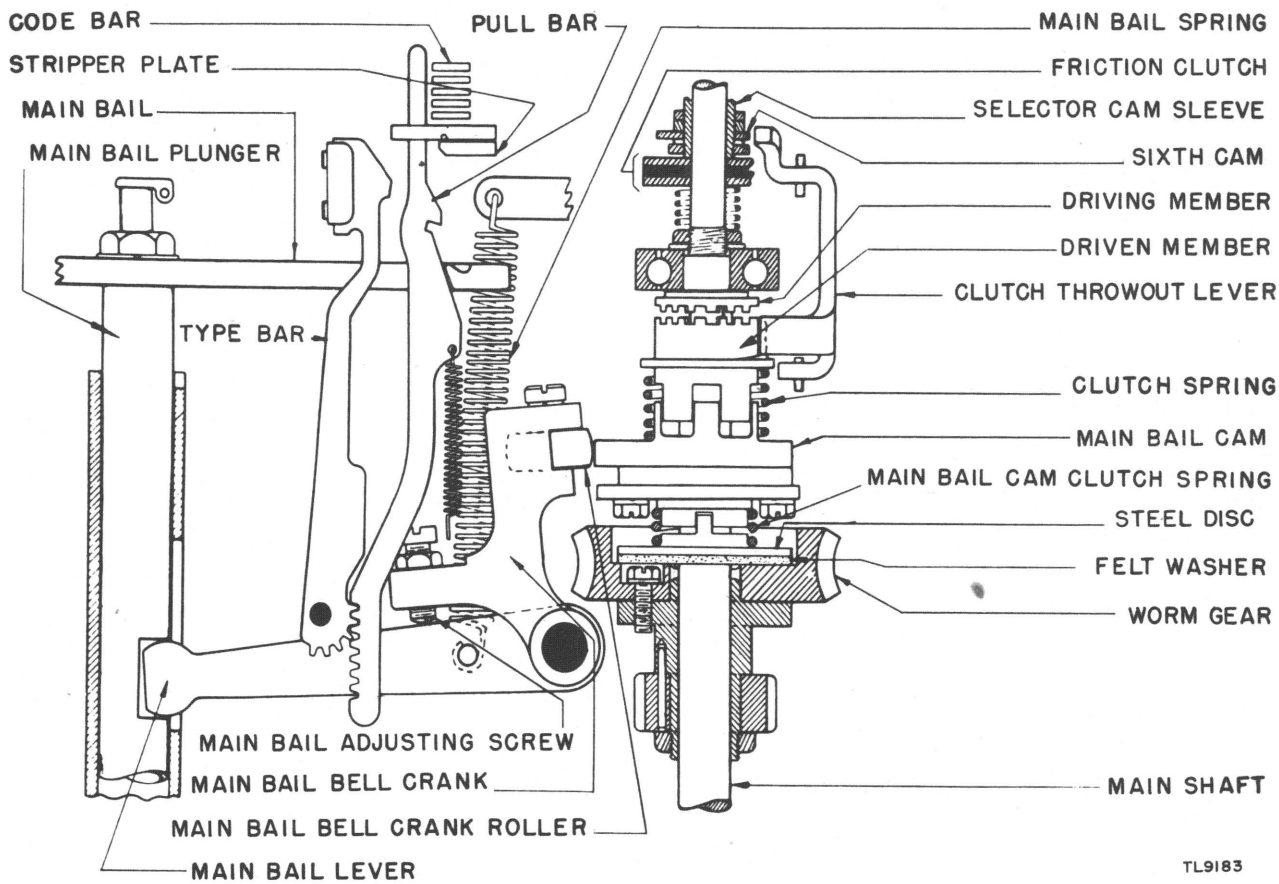

Figure 62. Section of main shaft.

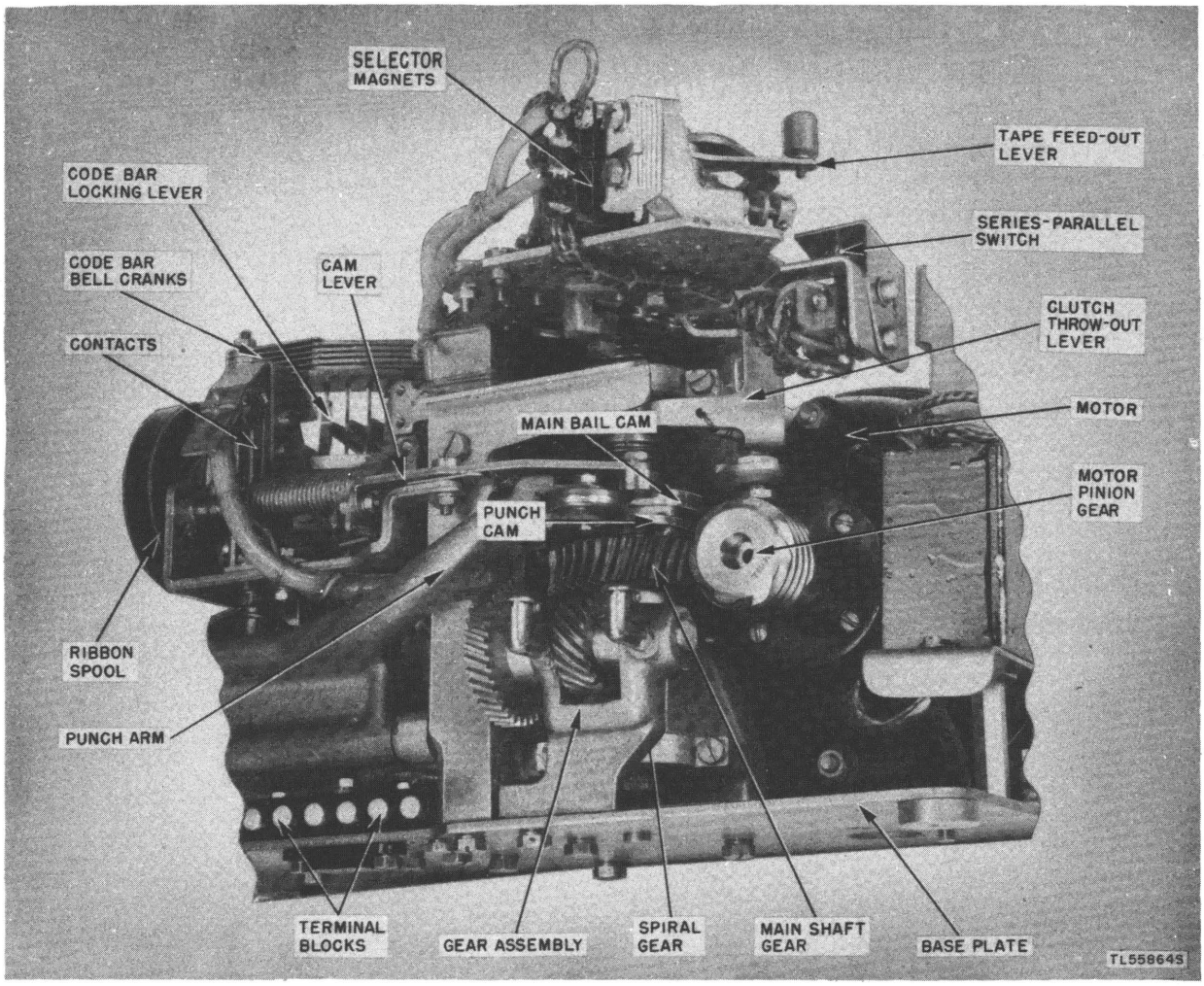

Figure 63. View of typing reperforator gears.

(or the selector arm), the locking lever is in contact with a low portion of the locking cam. With the locking lever and the locking cam in this position, the extension of the locking lever engages the locking wedge on the armature extension (or the selector arm), thus holding the armature extension (or the selector arm) firmly in position. When the locking lever is riding on the high portion of the locking cam, the locking-lever extension is held away from the locking wedge and the armature is free to move in response to the impulse being received.

85. Main-Shift Clutch Throw-Out Lever

a. DESCRIPTION AND PURPOSE. The main-shaft clutch throw-out lever (fig. 63) consists of the stop arm, throw-out lever spring, and cam arm. It is designed so that the extension of the stop arm rides on the driven clutch member of the main shaft and the cam arm rides on the sixth cam of the selector-cam sleeve assembly. The clutch throw-out lever cams the driven clutch member out of engagement with the driving clutch member. After camming the driven member out of engagement with the driving member it blocks the rotation of the main-bail cam and punch-arm cam until all five impulses have been received by the selector mechanism. This insures that printing and punching of tape will not be performed before all the impulses are received.

b. OPERATION. During the positioning of the No. 5 selector sword, the sixth cam on the selector-cam sleeve disengages the clutch stop

arm from the driven clutch member. (See fig. 62.) The main-shaft clutch spring moves the clutch members into engagement causing the main-bail cam and punch-arm cam to rotate. At the end of each revolution of the main-bail cam and punch-arm cam, the clutch stop

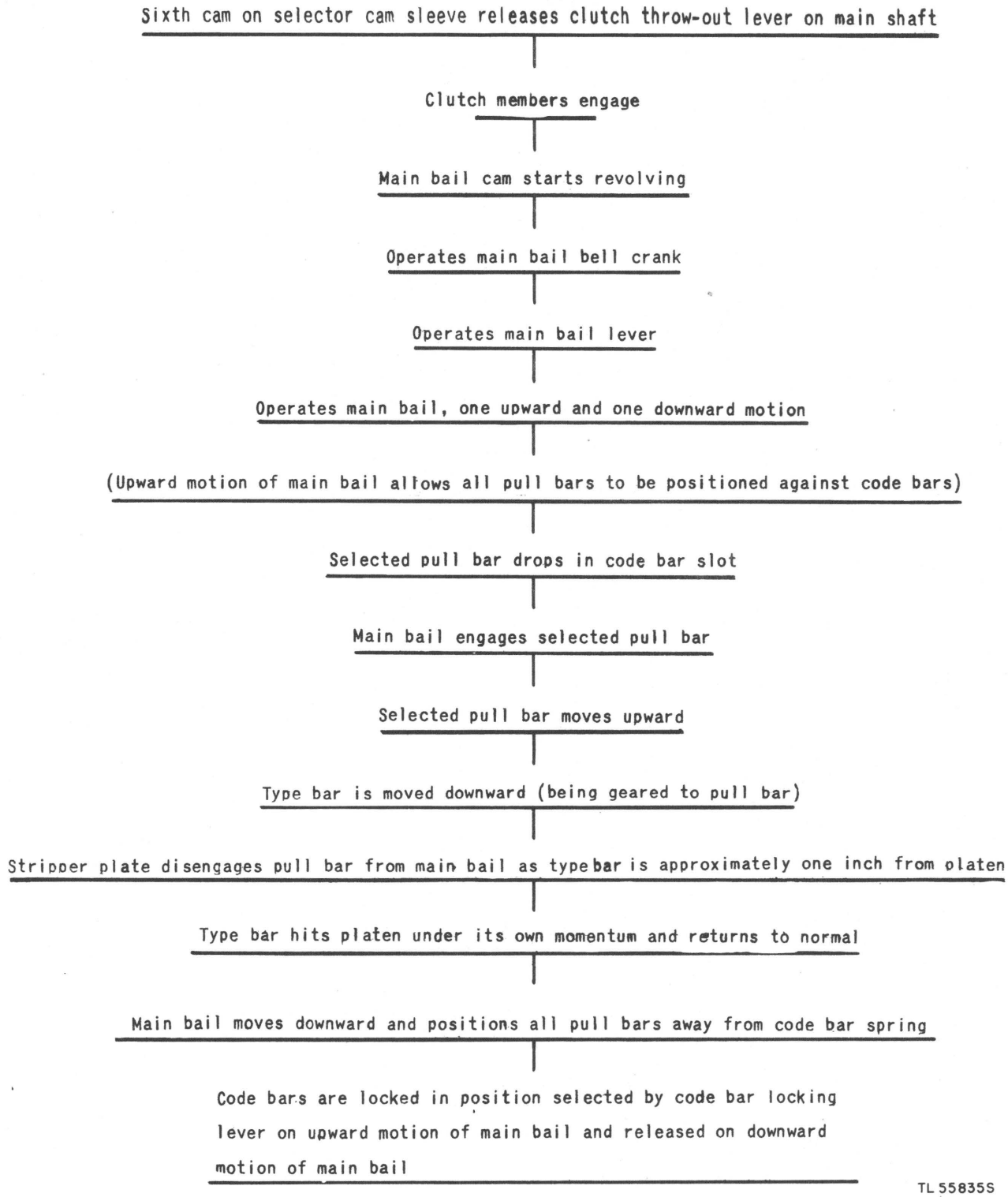

Figure 64. Sequence chart for printing mechanism.

arm of the clutch throw-out lever engages the cam surface of the projection on the driven clutch member and moves it out of mesh with the driving clutch member. Immediately after the completion of the selection of any character or function, the main-bail and punch-arm cams (fig. 63) turn one revolution, which causes the printing of that character or the operation of that function. Any character or function may be selected while the printing of the previous selection is taking place.

86. Printing Mechanism

a. DESCRIPTION AND PURPOSE. The main bail, which is operated by the main-bail cam through the medium of a bell crank, lever, and plunger (fig. 62), furnishes the power for the performance of printing and other functions (except selecting, perforating, and spacing). In the normal stop position, the main-bail bell-crank roller is on the high part of its cam as shown in figure 63. In this position the main bail engages the back of the pull bars, pushing the pull bars away from the code bars so that the code bars can be positioned by the selecting mechanism. (See par. 81.) The purpose of the printing mechanism is to control the completion of the operating (printing or function) cycle which follows immediately after the selecting cycle.

b. OPERATION. When the main-bail cam rotates, the main-bail bell-crank roller rides down the slope of the main-bail cam. This gradually releases the pressure of the main-bail adjusting screw against the main-bail lever permitting the main-bail spring to retract. As the main-bail spring retracts the main-bail lever pivots upward, causing the main-bail plunger (and the main bail) to rise. As the main bail moves upward, pressure is released on the back of the pull bars permitting the pull-bar springs to move the pull bars toward the code bars. The selected pull bar moves into the path set up by the alinement of notches in the code bars. (See par. 87.) Since the notches in the code bars are aligned to correspond to the selected pull bar, the unselected pull bars will be blocked by the code bars. A hooklike projection on the rear edge of the selected pull bar is engaged by the main bail as it moves upward, causing the pull bar to be raised. The rack and gear connection between the pull bar and type bar

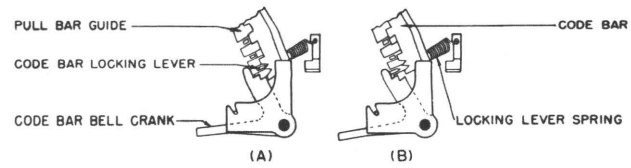

Figure 65. Code-bar locking lever.

causes the type bar to rotate about its pivot toward the platen. As the pull bar is moved upward, the sloping surface of the rear projection on the pull bar strikes a stripper plate causing the pull bar to be disengaged from the main bail shortly before the type bar reaches the platen. Momentum carries the type bar the remaining distance to the platen. As the main-bail cam continues its rotation, the main-bail bell crank operates inversely from that described above, causing the main bail and pull bars to be restored to their normal stop position. Figure 64 is a summary of the operations of the printing mechanism.

87. Code-Bar Locking Lever

a. DESCRIPTION AND PURPOSE. The code-bar locking lever is located in the extreme right-hand slot of the pull-bar guide. (See fig. 65A.) The code-bar locking lever is similar to the pull bars (par. 86) except that the code-bar locking lever does not have a hooklike projection on the rear edge of the lever. The purpose of the code-bar locking lever is to engage and lock the code bars after they have been positioned.

b. OPERATION. After each of the code bars has been positioned in accordance with the five selecting impulses, the tension of the locking-lever spring causes the locking lever to engage the V-shaped notches at the right end of the code bars. This takes place during the early part of the upward stroke of the main bail. As the main bail nears the end of its downward stroke, the locking lever is cammed out of engagement with the notches on the code bars. When the code bars are not engaged by the locking lever (fig. 65B), they are free to be positioned by the selector swords and T-levers.

88. Tape-Perforating Mechanism

a. DESCRIPTION AND PURPOSE. The tape-perforating mechanism consists of the punch-arm casting, punch-bail link, punch bail, punch

bell crank, punch selector fingers, and the punches. (See fig. 67.) Operation of the punch-arm cam actuates the punches by means of the parts listed above. The punch selector fingers are positioned by the punch bell-crank springs (fig. 67) so that the selection set up in the code bars will be perforated in the tape.

b. OPERATION. The positioning of the punch selector fingers takes place early in the upward stroke of the main bail. The motion of the code-bar locking lever is utilized to operate the code-bar bell cranks which move with the locking lever (fig. 65), toward the code bars. If a code bar has been positioned to the right, the motion of the associated code-bar bell crank will be blocked by the right end of the code bar as the locking lever moves toward the code bars. The punch selector finger will remain in position to engage the punch as shown in figure 67. If the code bar has been positioned to the left, the code-bar bell crank will be free to follow the code-bar locking lever. The parts connecting the code-bar bell crank and the punch bell crank turn in a clockwise direction, thus moving the punch selector finger to the left so that its recess will be under the punch. Shortly after the punch selector fingers have been positioned, the punch-arm cam moves the punch bail through the medium of the punch-arm casting and the punch-bail link. When the punch-bail moves to the right, the punch-engaging projections of the selector fingers which are in line with the punches, raise the punches causing them to perforate the tape. A projection on the

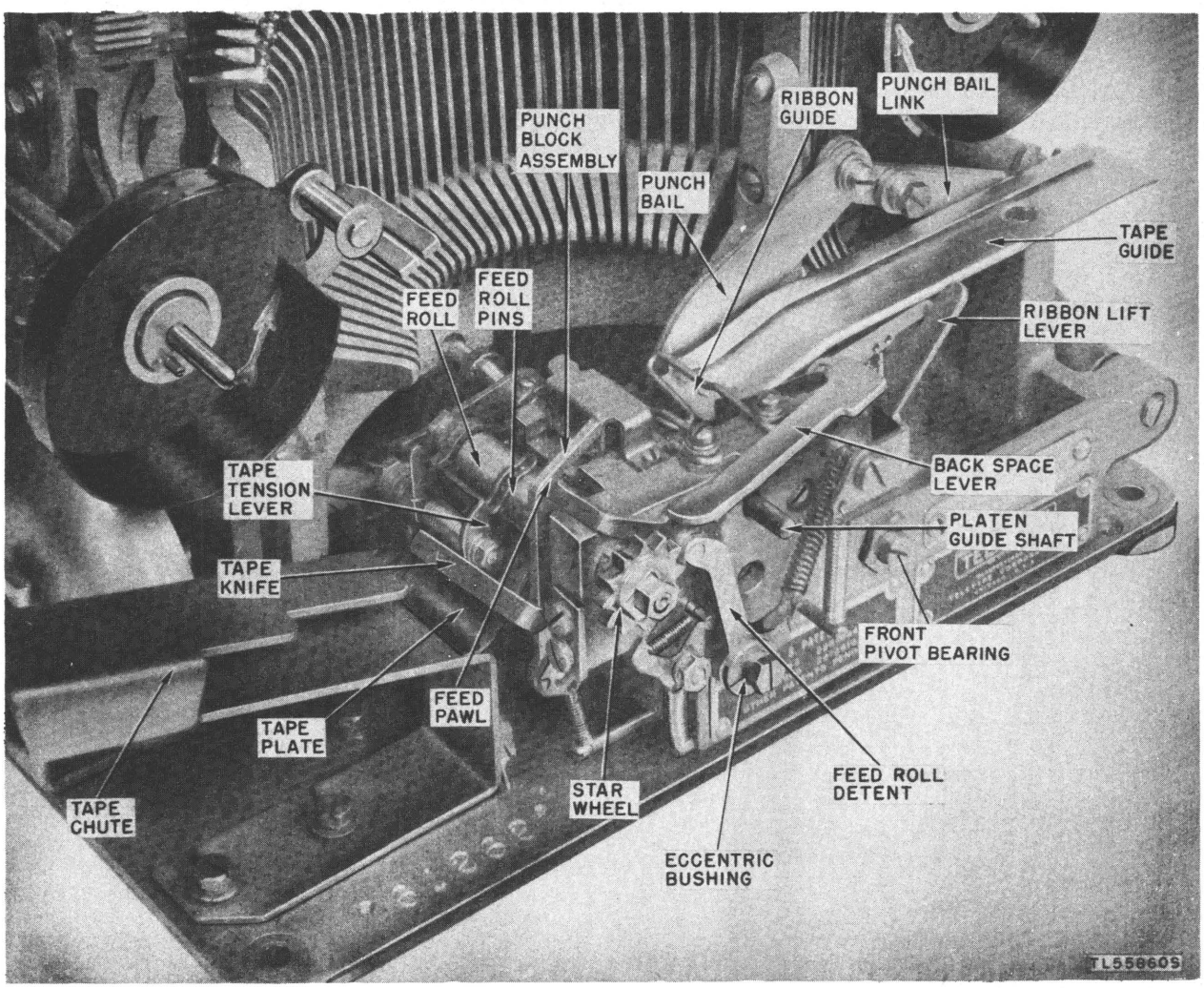

Figure 66. Punch block of typing reperforator.

punch bail engages the feed punch during every operation. The upstop screw in the punch bail limits overtravel of the punches to prevent mutilation of the tape. Figure 68 is a summary of the operations of the tape-perforating mechanism.

89. Spacing

a. DESCRIPTION AND PURPOSE. Proper spacing between printed characters and between tape perforations requires the tape to be moved to the left as each character is printed and perforated. Tape is mechanically spaced by the rotation of the feed roll which has pins on its periphery (fig. 66) that engage the feed perforations in the tape. The tape-tension lever holds the tape in engagement with the feed roll. Tape may be spaced by manually operating the tape feed-out lever. (See fig. 63.)

b. OPERATION. During each downward stroke of the punch bail (figs. 66 and 67), the feed pawl (attached to the punch bail and held in engagement with the feed-roll ratchet by a spring) engages a tooth of the feed-roll ratchet, thus turning the feed roll. The feed-roll detent insures even spacing of the perforations by applying pressure on the feed-roll ratchet so that the feed pawl engages one tooth on the feed roll. Tape may be spaced out of the perforating mechanism when the signal line is idle by manually operating the tape feed-out lever which is mounted on one of the range-finder mounting posts. (See fig. 59.) By operating the tape feed-out lever to the left, pressure is applied to the bell crank which causes the trip latch to release the stop lever. (See fig. 57.) This allows the selector-cam sleeve to rotate freely, causing a series of the code combinations for letters to be perforated in the tape. Figure 69 is a summary of the functioning of the spacing mechanism.

90. Ribbon-Feed Mechanism

a. DESCRIPTION AND PURPOSE. The ribbon-feed mechanism consists of two ribbon-spool cups together with associated parts. (See figs. 59 and 70.) The entire assembly resembles the ribbon mechanism of any standard typewriter. Each ribbon-spool cup is mounted on a bracket, with a ribbon-spool shaft and a ribbon-reverse shaft. The ribbon-spool shaft on the bracket makes contact with the horizontal ribbon-feed shaft mounted behind the type basket. The end of the ribbon-feed lever engages the notched extension on the main-bail plunger. (See fig. 70.) The ribbon-feed pawl, which moves the ribbon-feed ratchet. is attached to the ribbon-

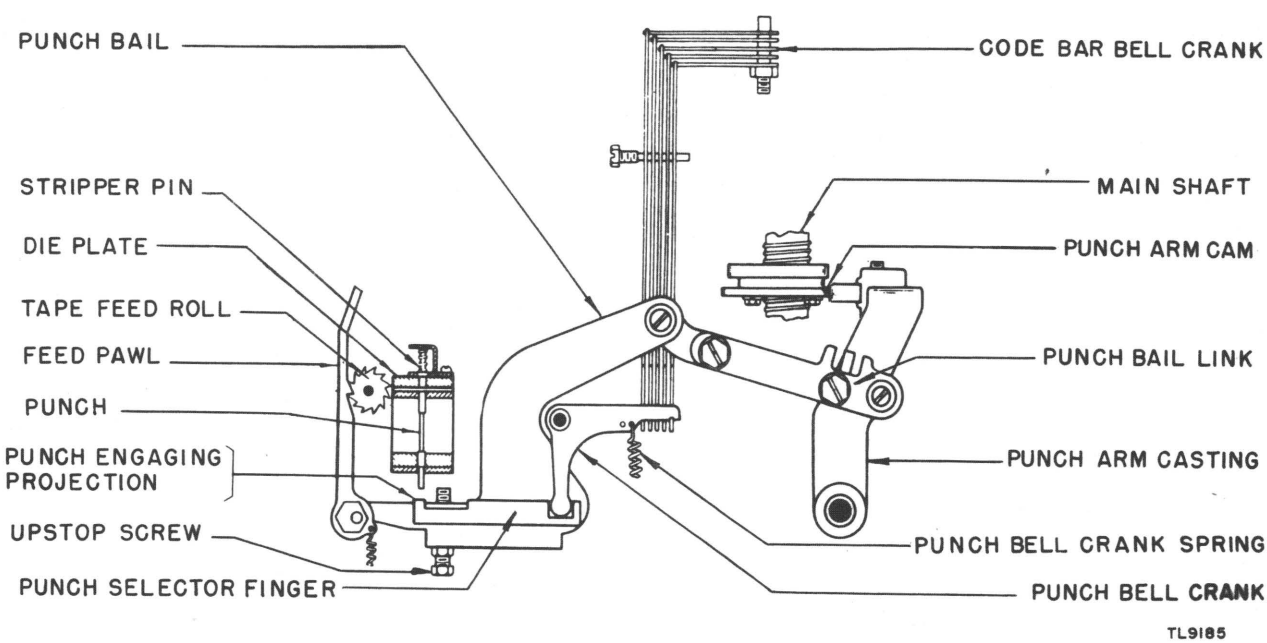

Figure 67. Tape-perforating mechanism.

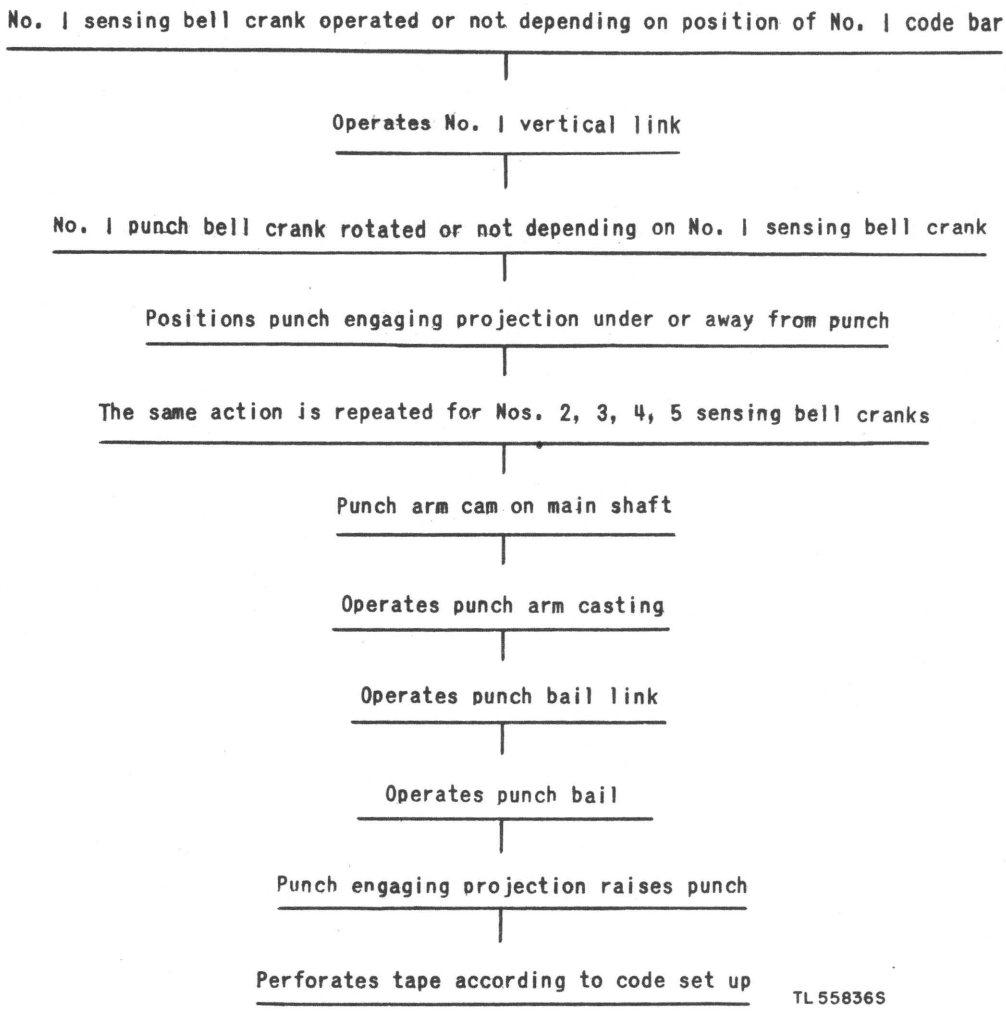

Figure 68. Sequence chart for tape perforation.

feed lever. The ribbon-reverse mechanism is described in paragraph 91.

b. OPERATION. With each downward operation of the main-bail plunger, the ribbon-feed lever roller rides up the slope of the notch in the main-bail plunger. This causes the ribbon-feed pawl to advance the ribbon-feed ratchet one tooth. The shaft mounting the ribbon-feed ratchet and the ribbon-feed ratchet gear imparts motion to the ribbon-feed shaft through the ribbon-feed shaft gear. The left (or right) ribbon-feed shaft gear meshes with the left (or right) ribbon-spool shaft gear. The turning of the left (or right) ribbon-feed shaft causes the left (or right) ribbon-spool shaft to revolve. The left (or right) ribbon-spool shaft turns the ribbon spool attached to it.

91. Ribbon-Reverse Mechanism

a. DESCRIPTION AND PURPOSE. The ribbon-reverse mechanism consists of the ribbon-reverse arm, ribbon-reverse shaft, and their associated parts (figs. 71 and 72). This mechanism is provided to reverse the ribbon automatically when an eyelet near the end of the ribbon becomes engaged with the ribbon-reverse arm.

b. OPERATION. Assuming that the ribbon is being wound on the left-hand spool and is almost unwound from the right-hand ribbon spool, the eyelet, fastened near the end of the ribbon, engages and moves the right-hand ribbon-reverse arm. The arm, fastened to the right ribbon-reverse shaft, moves the right-hand

ribbon-reverse pawl into the path of the ribbon-reverse bail. (See fig. 71.) As the ribbon-reverse bail moves downward, it engages the left ribbon-reverse pawl, moving the ribbon-feed shaft to the right. (See fig. 72.) The ribbon-feed shaft gear on the left is disengaged and the gear on the right is engaged. The ribbon is then wound on the right-hand ribbon spool. The reversing operation takes place in a similar manner on the left-hand side of the assembly when the eyelet near the left end of the ribbon engages the left-hand ribbon-reverse arm.

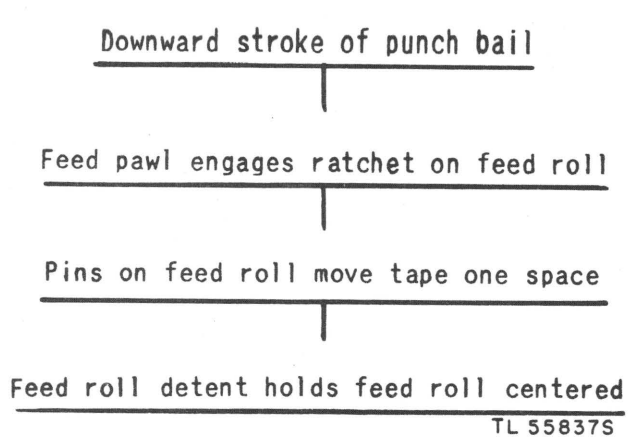

Figure 69. Sequence chart for spacing mechanism.

92. Overlap of Selecting Cycle and Printing or Function Cycle

The normal speed of tactical teletypewriter equipment in use throughout the army is 368 operations per minute. Fixed plant teletypewriter equipment may be modified to operate at 600 opm. Through the use of an overlap arrangement, the typing reperforator can perform a printing or function operation while the next selection is being set up on the keyboard transmitter unit or while a group of code impulses are being received over the signal circuit. The incoming impulses are stored in the receiving mechanism by setting the swords in the new selection order. Tension springs on the selector levers supply the energy required to

TABLE VI

Operation of previous selection	Locking of previous selections	Impulses of next selection being received and/or stored	Positioning of next selection on code bars and bell cranks	TIME REQUIRED TO RECEIVE ONE SELECTION
Selector-cam sleeve stopped	Not locked	STOP		
Main-bail and punch-arm cams start to revolve, main bail and punch arm start moving	Locking lever starts forward engaging code-bar bell cranks	START	Selector-cam sleeve assembly starts revolving for the next selection.	
Main bail engages selected pull bar	Locked	1	Sword positioned and new selection stored.	
Letter printed or function operation performed	Locked	2	Same as above.	
Main bail starts returning to normal position	Locked	3	Same as above.	
Main bail nearly normal	Unlocked	4	Code bars are set simultaneously.	
Main bail normal, main-shaft clutch throw-out lever engaged by sixth cam	Not locked	5	No. 5 code bar is positioned.	

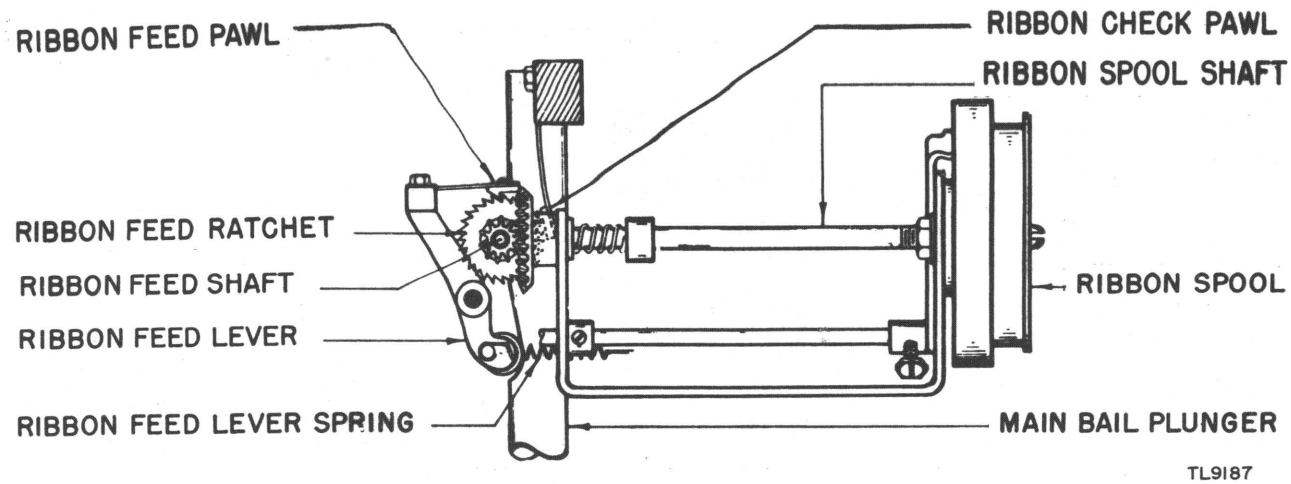

Figure 70. Ribbon-feed mechanism.

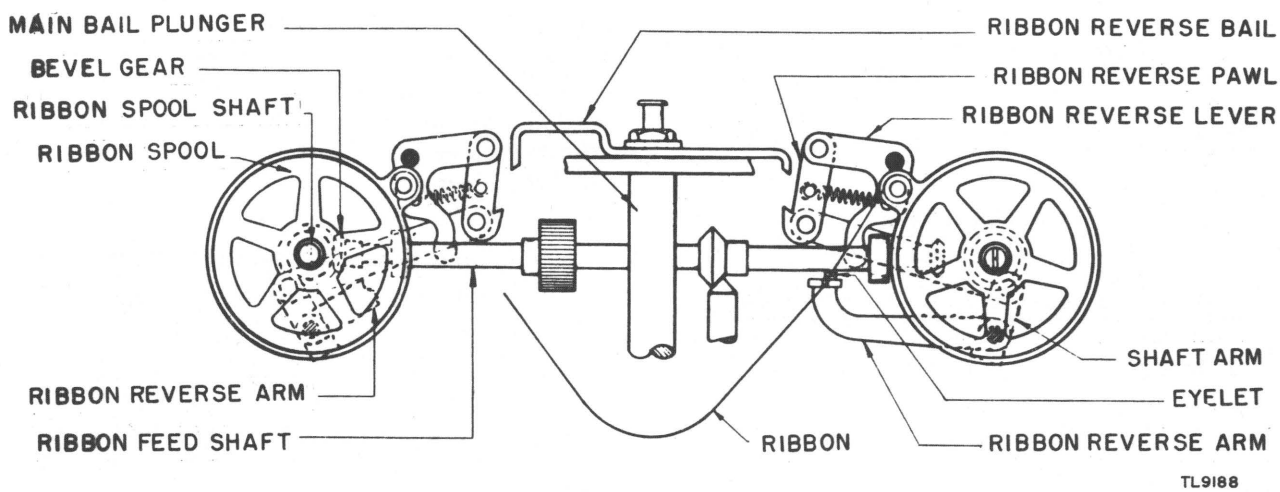

Figure 71. Ribbon-reverse mechanism (moved to left).

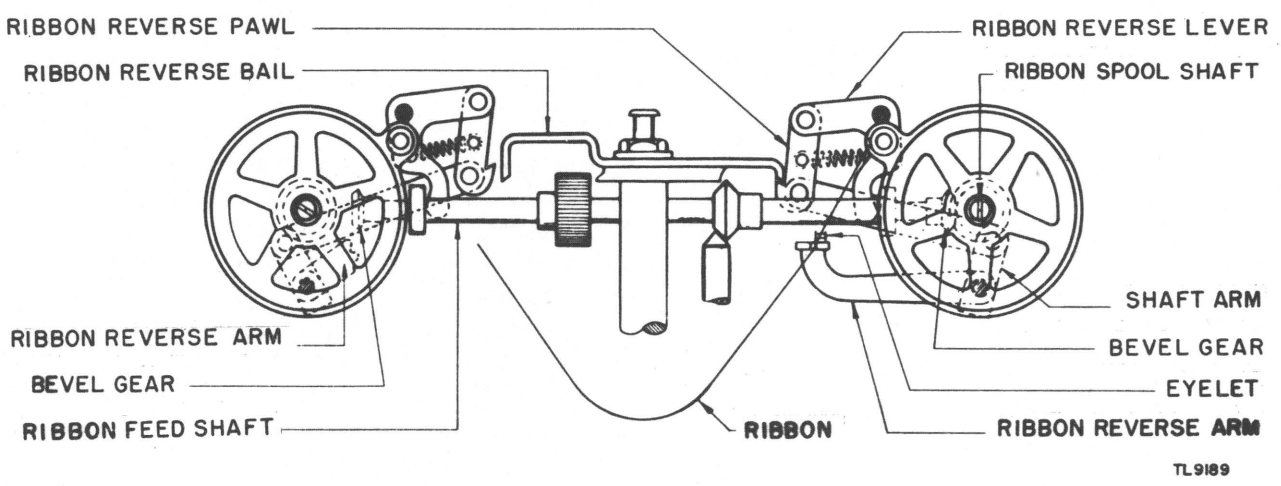

Figure 72. Ribbon-reverse mechanism (moved to right).

807975 O - 48 - 7

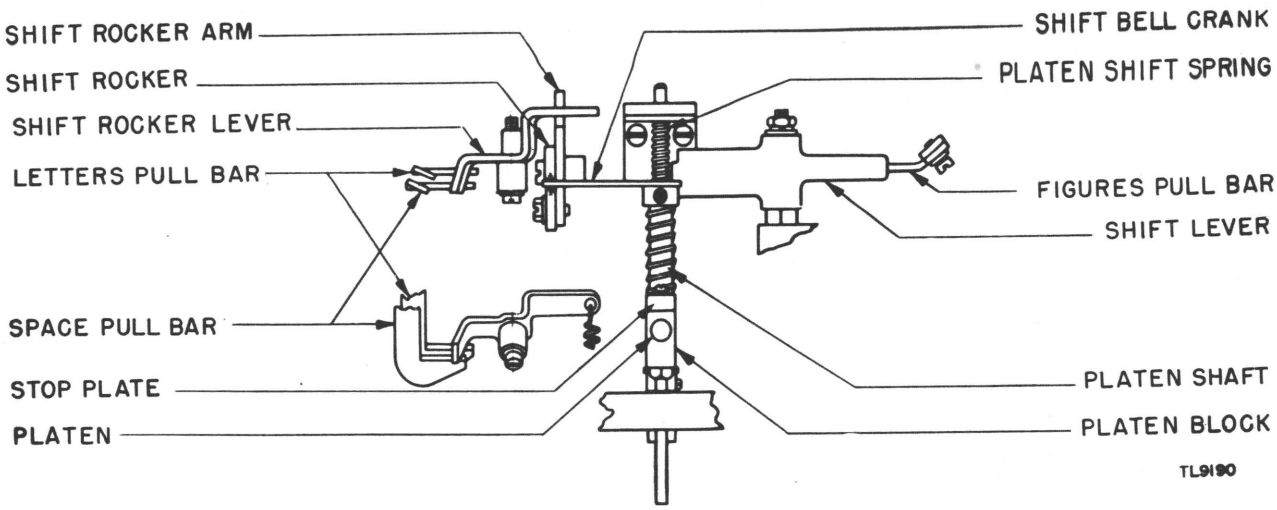

Figure 73. Shift mechanism.

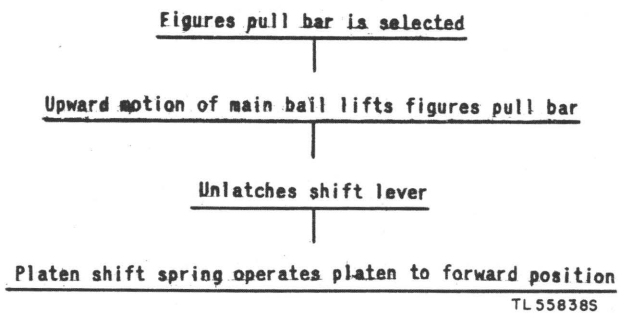

Figure 74. Sequence chart for figures shift.

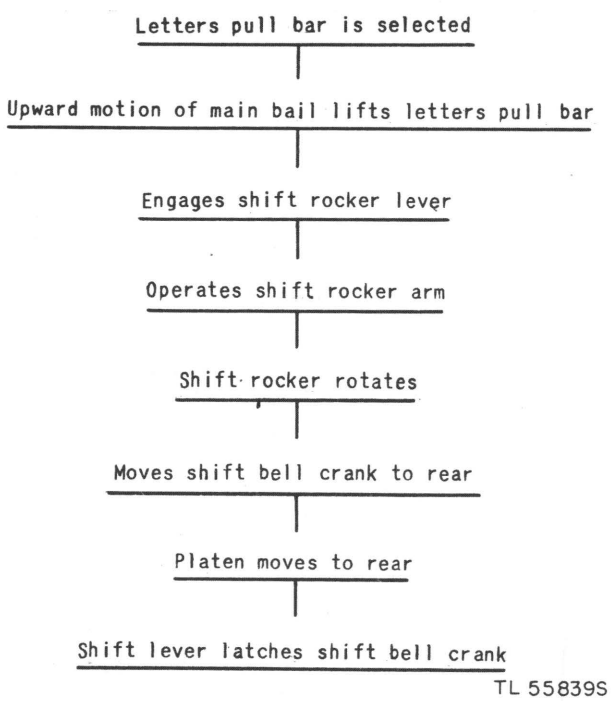

Figure 75. Sequence chart for letters shift.

complete the selection for the next printing or function operation, when the mechanism is unlocked after a completed operation. Table VI shows the relationship between the operation of the previous selection and the setting up of the next selection.

93. Upper and Lower Case Shift Mechanism

a. DESCRIPTION AND PURPOSE. The shift mechanism includes the platen, platen shaft, and associated parts which cause the platen to be moved back and forth. The platen consists of a disk of synthetic rubber about ¼ inch in diameter mounted on a cylindrical steel rod of the same diameter about ½ inch long. This assembly fits into a well in the platen block which is mounted so that it can be shifted back and forth on the platen shaft beneath the tape. (See fig. 73). The platen is normally in the LETTERS position.

b. OPERATION. To print FIGURES when the platen is in the LETTERS position, the FIGURES pull bar is selected. As the main bail moves upward, it engages and raises the FIGURES pull bar as explained in paragraph 86. A horizontal projection at the lower extremity of the FIGURES pull bar raises the right end of shift lever. The shift lever pivots on its axis, releasing the shift bell crank allowing the platen shift spring to move the platen shaft to the FIGURES (forward) position. In this position, the platen block on which the platen is mounted will support the tape opposite the figures on the type pallets. When the platen

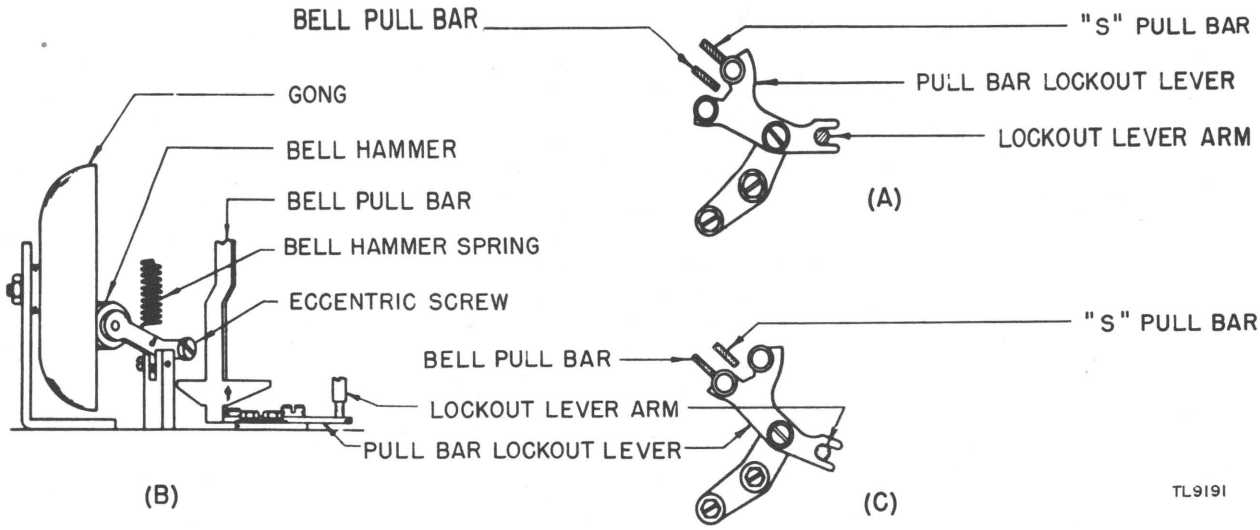

Figure 76. Signal-bell mechanism.

is in the FIGURES position it is necessary to move the platen back to the LETTERS position before letters can be printed. When the code combination for LETTERS is set up on the code bars (par. 86), the LETTERS pull bar is engaged and raised by the main bail. An extension on the lower extremity of the pull bar raises the left-hand arm of the shift rocker lever. (See fig. 73.) The right-hand arm of the shift rocker lever depresses the rear extension of the shift rocker arm. The shift rocker rotates about its pivot and the upper notched end is moved toward the rear, moving the platen block with it, through the medium of the shift bell crank and the platen shaft. When the platen reaches the LETTERS position, the shift lever engages and latches the shift bell crank thus holding the platen shaft. Refer to figures 74 and 76 for summaries of the functioning of figures shift and letters shift.

94. Signal Bell

a. DESCRIPTION AND PURPOSE. Some typing reperforators are arranged to sound a signal bell when FIGURES and the letter S are selected in that order. The bell is used as an audible signal to attract the attention of an operator at a distant station.

b. OPERATION. When the platen is in the FIGURES (forward) position, the lock-out-lever arm of the shift mechanism holds the pull-bar lock-out lever in such a position as to allow the selection of the BELL pull bar but to prevent selection of the S pull bar. (See fig. 76 A.) With the BELL pull bar selected, the main bail engages the notch in the BELL pull bar and lifts it upward. A projection near the bottom of the BELL pull bar engages the eccentric screw of the bell hammer, causing the hammer to strike the gong. (See fig. 76 B.) When the platen is in the LETTERS position, the pull-bar lock-out lever is positioned so that the S pull bar may be selected and the BELL pull bar is blocked as shown in figure 76 C. Figure 77 is a summary of the operations of the signal-bell mechanism.

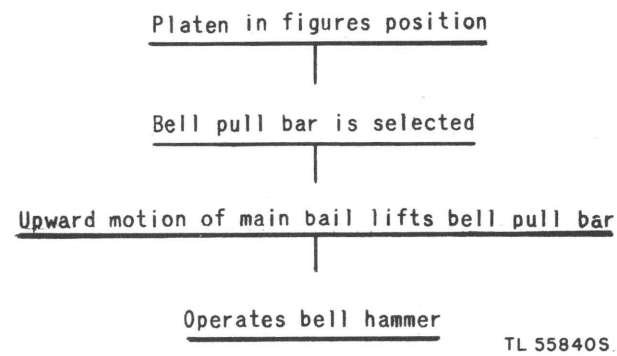

Figure 77. Sequence chart for signal-bell mechanism.

95. Mechanical Tape-Out Alarm

a. DESCRIPTION AND PURPOSE. Keyboard bases and receiving-only (low) bases are provided with a bell mechanism which sounds a warning signal when the supply of tape is

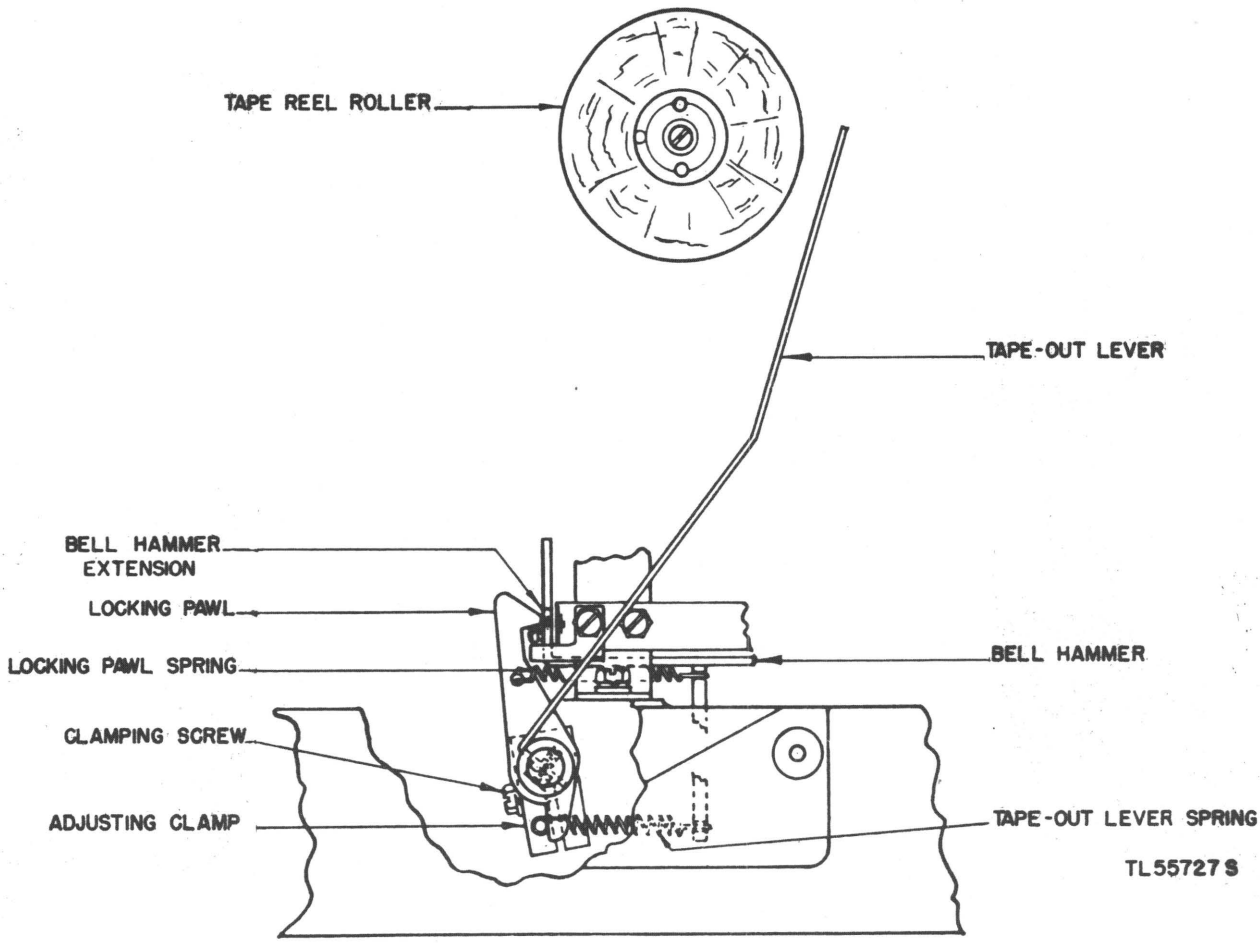

Figure 78. Cross-section of mechanical tape-out alarm mechanism.

nearly exhausted. This mechanism consists of a bell, a bell hammer (operated by a post on the keyboard gear), a bell-hammer latch, and a tape-out lever.

b. OPERATION. Because of its shape, the tape-out lever (fig. 78) is held against the tape roll at all times. As the supply of tape decreases, the tension of the tape-out lever spring increases. When the supply of tape is nearly exhausted, the tape-out lever spring tension causes the locking pawl to release the bell-hammer extension. A spring on the bell-hammer extension (fig. 78) causes the bell hammer to strike the gong. As the keyboard gear (fig. 79) rotates, a post on the gear trips the bell-hammer extension, causing the bell to ring each time the gear completes one revolution. The alarm is inoperative when a new roll of tape is installed, thus causing the locking pawl to engage and hold the bell-hammer extension so that it will not be tripped by the post on the keyboard gear as the gear revolves.

Note. There are numerous optional features which may be used on typing reperforator sets. However, all of these features cannot be incorporated in a given set at the same time, nor are they all applicable to any individual set. The most common optional features are described in paragraphs 96 to 107.

96. Magnet-Operated Tape Feed-Out Lever

a. DESCRIPTION AND PURPOSE. The magnet-operated tape feed-out lever provides remote control of the tape feed-out feature. It releases the selector-cam sleeve so that the sleeve rotates freely, causing a series of code combinations for LETTERS to be perforated in the tape. The lever is operated by a magnet (fig. 80) which is mounted on the rear of the selector-mechanism mounting plate. A local circuit furnishes the power to energize the magnet. (See fig. 80).

b. OPERATION. When the magnet is energized, the armature is pulled to the magnet. The armature, attached to the tape feed-out lever, causes the lever to operate. This operation allows the selector-cam sleeve to rotate freely until the lever is released. When the selector-cam sleeve rotates freely, a series of code combinations for LETTERS is set up by the selecting mechanism, thus causing the tape to feed out of the punch mechanism.

97. Tape Feed-Out Control Mechanism

a. DESCRIPTION AND PURPOSE. The tape must be spaced out of the machine in order to assure that the end of the last message perforated will be transmitted. If the tape is to be sent through a transmitter distributor adjacent to the typing reperforator without severing the tape, it must be spaced far enough to permit the last perforations of the message to be transmitted. If the tape is to be sent through a transmitter distributor some distance from the typing reperforator, it is only necessary to space the tape so that the end of the printed message clears the tear-off edge of the left-hand tape guide. When this condition is fulfilled, the tape may be torn off. Tape is spaced out by unlatching the selector-cam sleeve to allow it to rotate freely. This operation is initiated manually by momentarily depressing a push button on the typing reperforator. This causes a magnet to unlatch the selector-cam sleeve and puts into operation a time-delay contact operating mechanism which automatically stops tape feeding after sufficient tape has been spaced out. The circuit is so arranged that this operation can also be initiated from a remote-control push button. The time-delay feature is adjustable over a limited range to provide for feeding out tape to meet either of the requirements previously mentioned.

b. OPERATION. Refer to the schematic circuit shown in figure 81.

(1) When either push button is depressed, the circuit to the worm-follower disengaging magnet (mounted on the tape feed-out mechanism bracket in back of the right-hand ribbon-spool cup (fig. 82) is opened. When the magnet armature is released, it opens its own locking circuit and closes two pairs of contacts (A and B). One of these pairs of contacts (A) prepares a circuit to the selector-cam trip magnet

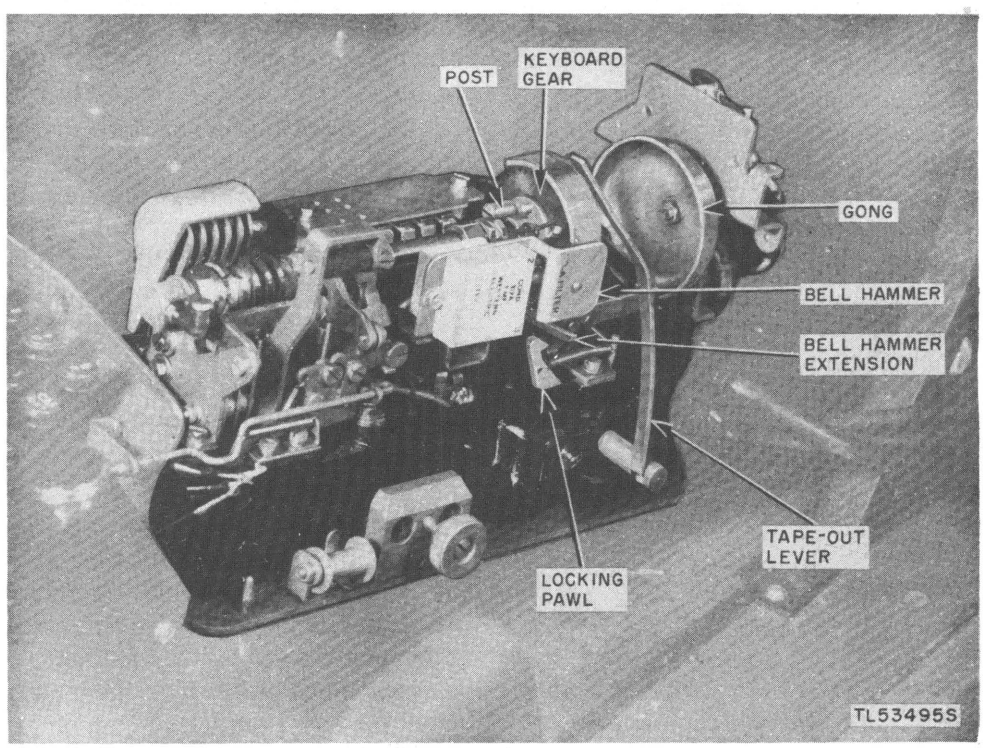

Figure 79. Mechanical tape-out alarm mechanism on keyboard base.

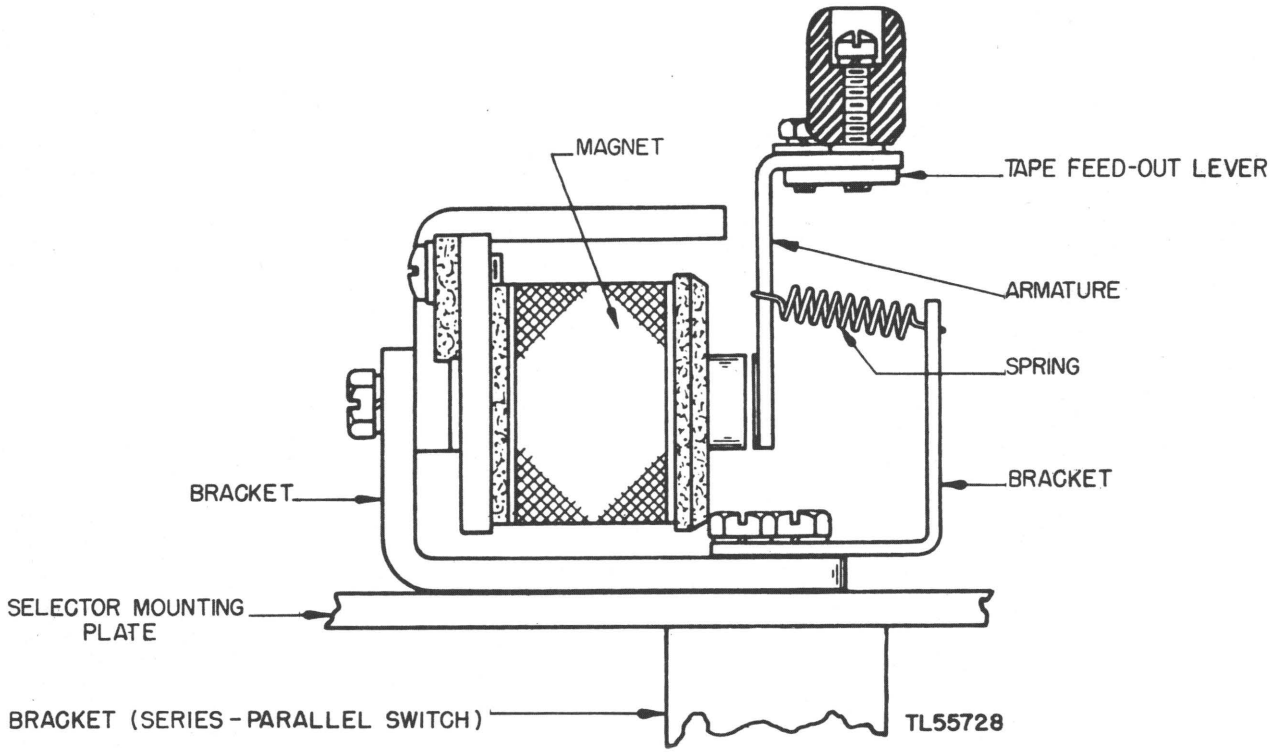

Figure 80. Magnet-operated tape feed-out lever.

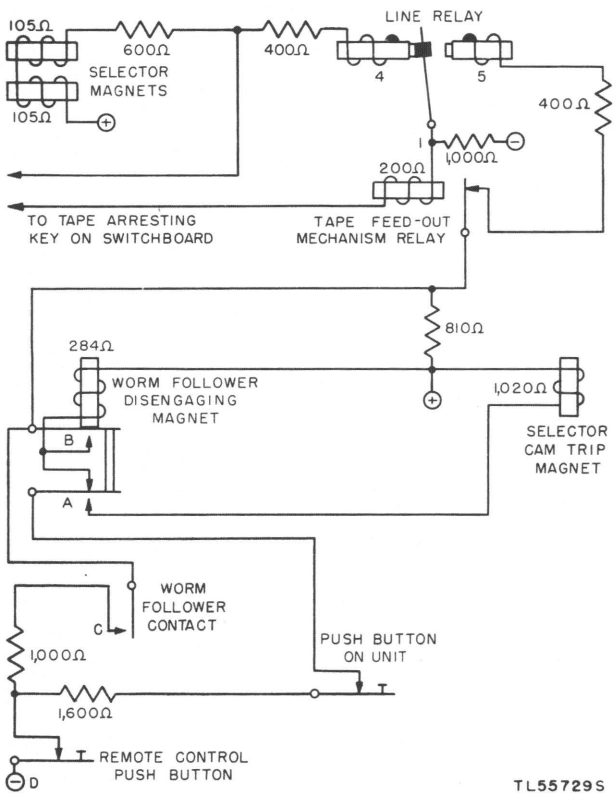

Figure 81. Tape feed-out control circuit.

on the selector mounting plate. When the push button is released, this circuit is completed and the selector-cam trip magnet is energized. The other pair of contacts (B) prepares a circuit to the worm-follower contacts.

(2) Operation of the trip magnet unlatches the selector-cam sleeve, allowing the main shaft to rotate and causing the unit to feed tape. Since the selector armature remains in the marking position during the rotation of the selector-cam sleeve, the LETTERS combination is perforated in the tape. The selector-cam trip magnet does not become energized until the circuit through the push button is restored by releasing the push button. Therefore, the feed-out operation will not start as long as the tape feed-out push button is held depressed.

(3) In addition to opening its own locking circuit and closing two other circuits, release of the worm-follower disengaging magnet armature (fig. 82) allows the worm follower to become engaged with the teeth of a ratchet-driven worm gear. This gear is rotated by a pawl mounted on a lever which is operated by the main-bail cam. As the worm rotates it

moves the worm follower toward a pair of contacts (C). When these contacts are closed by the worm follower, a circuit is completed from negative battery (D) to the worm-follower disengaging magnet. This circuit was prepared by the closing of contacts (B) referred to in (1) above. When the magnet armature is attracted, the magnet-locking circuit is restored, the worm follower is disengaged from the worm, and the circuit from negative battery (D) to the selector-cam trip magnet is opened. When the circuit to the trip magnet is opened, the trip-magnet armature is released, thereby stopping the rotation of the selector-cam sleeve.

(4) Provision is made to interrupt tape feeding immediately upon reception of line signals. To accomplish this, the tape feed-out circuit is arranged so that the worm-follower disengaging magnet will be energized when the tongue of the line relay touches the No. 5 (spacing) contact. Operation of this magnet will restore the tape feed-out mechanism to its unoperated position, as explained in (3) above.

(5) When it is desired to prevent operation of the typing reperforator without disconnecting it from the signal line, a tape-arresting circuit may be closed by means of a key at a remote location. This key causes battery to be applied to the selector magnets, thus preventing reception of messages. In addition, the tape-arresting key causes the tape feed-out mechanism E relay to operate (fig. 81) which disconnects the tape feed-out circuit from the line relay. This permits the tape feed-out mechanism to be put in operation without being subject to stoppage by line signals.

98. Mechanical End-of-Line Indicator Mechanism

a. DESCRIPTION AND PURPOSE. When a typing reperforator is used with a keyboard base for transmitting on a circuit which includes page-printing teletypewriters, the mechanical end-of-line indicator mechanism informs the keyboard operator when to send the CARRIAGE RETURN and LINE FEED signals to avoid overrunning the lines being typed by the teletypewriters. The approach of the end of a line is indicated by the lighting of a signal lamp which is mounted on the keyboard base. The mechanical end-of-line indicator mechanism replaces the standard right-hand ribbon-spool bracket asembly. In addition to the parts furnisher with the standard ribbon-spool bracket asembly, the end-of-line indicator mechanism includes a worm and ratchet, a cam-follower lever and pawl, a worm follower pivoted on a movable bail, a special carriage-return pull bar, a contact assembly, and a signal lamp assembly. All of these parts mount on the typing reperforator unit with the exception of the signal lamp which mounts on the keyboard base.

b. OPERATION. The worm (fig. 83) is operated from the main-bail cam on the main shaft of the unit by means of the main-bail cam follower, pawl, and ratchet. The worm follower engages the groove in the worm and moves toward the signal-lamp contacts as the worm rotates. After a predetermined number of operations, the worm follower closes the signal-lamp contacts, causing the lamp to light. The contacts remain closed until the CARRIAGE RETURN signal is sent or received, at which time an extension

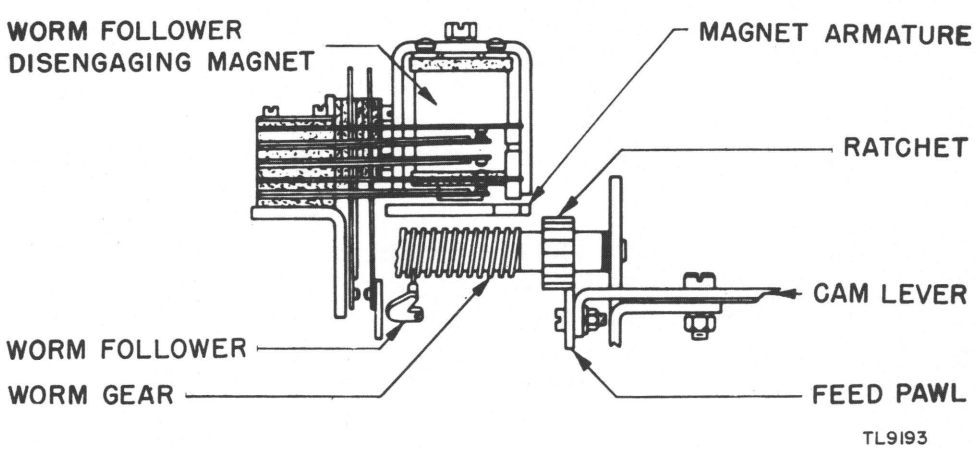

Figure 82. Tape feed-out control mechanism.

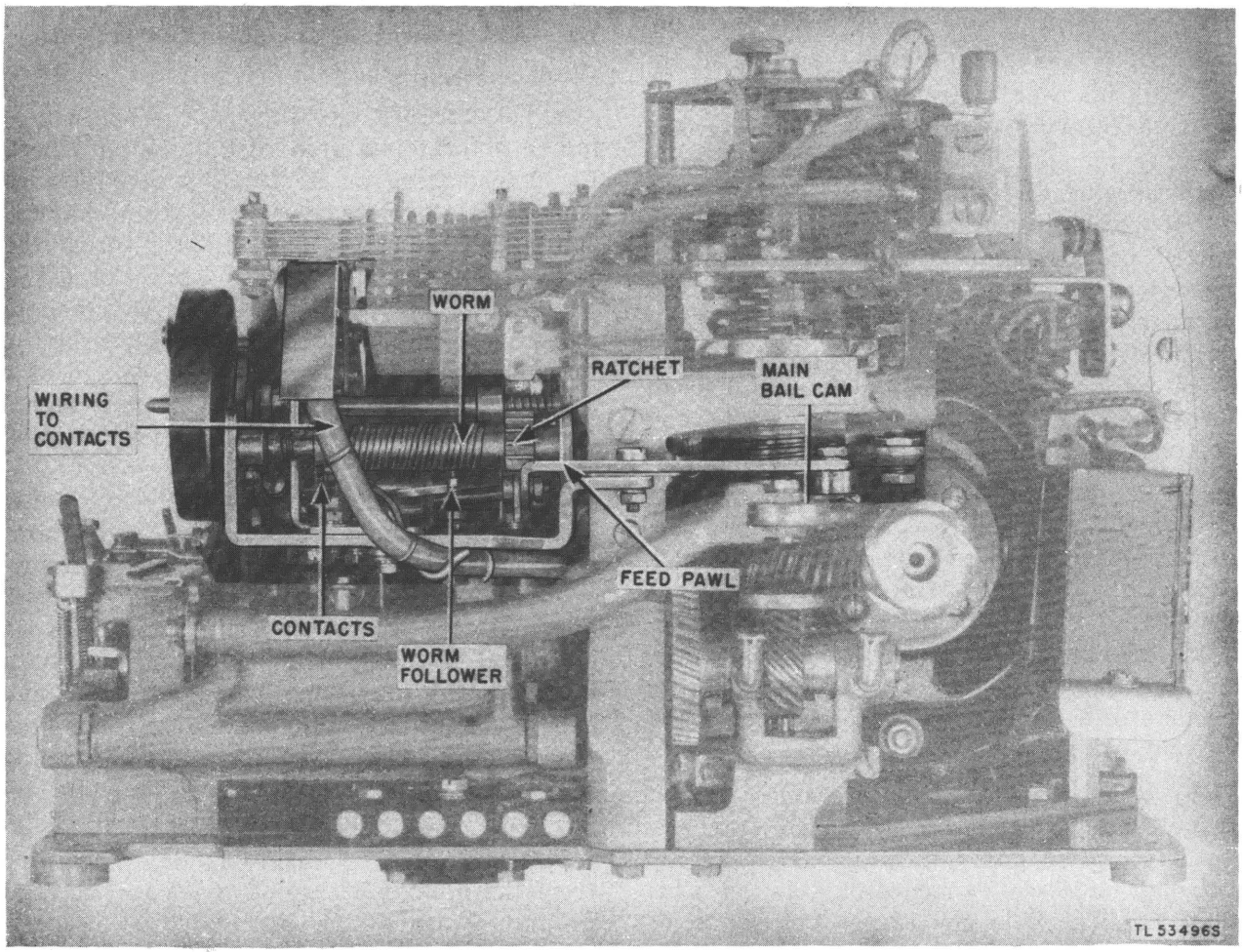

Figure 83. Mechanical end-of-line indicator mechanism.

on the carriage-return pull bar disengages the worm follower from the worm. This allows the signal-lamp contacts to open, extinguishing the lamp and permitting the worm-follower spring to return the worm follower to its initial position.

99. Clutch Throw-Out Lever Contact Mechanism

a. DESCRIPTION AND PURPOSE. Some units, such as the FPR21 typing reperforators (fig. 10) are equipped with a contact mechanism which is mounted on the selector-mechanism base. A cord attached to the contact mechanism is connected into a synchronizing circuit, within the equipment table, which sends artificial start and stop impulses to the selector mechanism of the typing reperforator. Operation of the contacts completes the synchronizer circuit.

b. OPERATION. The contacts are normally open when the reperforator unit is idling. When the cam sleeve assembly starts to turn, a cam operates the clutch throw-out lever which pushes against the make contact. The make contact is pushed against the stationary contact of the mechanism and the synchronizing circuit is completed. A detailed discussion of the synchronizer is contained in TM 11–2210.

100. Backspace Mechanism

a. DESCRIPTION AND PURPOSE. The backspace mechanism is intended for use on sending-receiving units to enable the operator to

backspace tape for the purpose of making corrections. It is operated by means of a backspace lever and a ribbon-guide lever located at the front of the receiving unit near the platen mechanism. (See fig. 84.) These levers may be operated individually or jointly by the fingers of one hand.

b. OPERATION. When the backspace lever is depressed, a pawl fastened to the lower arm of the backspace lever engages and turns the feed roll in a clockwise direction. This moves the tape backward one space for each operation of the backspace lever. The ribbon-guide lever lifts the ribbon guide and ribbon away from the tape, permitting the operator to see the printed characters on the tape.

101. Line Relay (Used with FPR23 Typing Reperforator)

a. DESCRIPTION AND PURPOSE. A line relay (fig. 260) is used whenever the length of the signal line or the character of the line circuit requires its use. It may be provided as an external accessory or it may be mounted on the base of the receiving unit if the base is provided with relay mounting and wiring facilities. (See fig. 12.) There are several types of line relays used, all of which add relatively little inductance to the line circuit. The main points of difference of the relays which mount on the base of the receiving unit are their operating current requirements and contact material. Their function is to reproduce the line signals in a local circuit for the operation of the selector magnets. Relays are jack mounted to facilitate easy removal.

b. OPERATION. The bias (2–7) winding (fig. 315) is supplied with 30 milliamperes of steady current from the power source. When a marking signal is being received there is 60 milliamperes of current flowing in the receive circuit, thus energizing the line (3–6) relay winding. The 60 milliampere marking current in the line winding overcomes the 30 milliamperes or steady current in the bias winding and causes the relay to move to the "M" (marking) side under the influence of an effective force of 30 milliamperes of marking current through one winding. This completes the circuit to the selector magnets. When no current is flowing in the line (signal) circuit (as during a spacing impulse) the line winding becomes de-energized and the bias winding, which has 30 milliamperes of current flowing through it all the time, pulls the armature to the "S" (spacing) side, thus opening the selector magnet circuit.

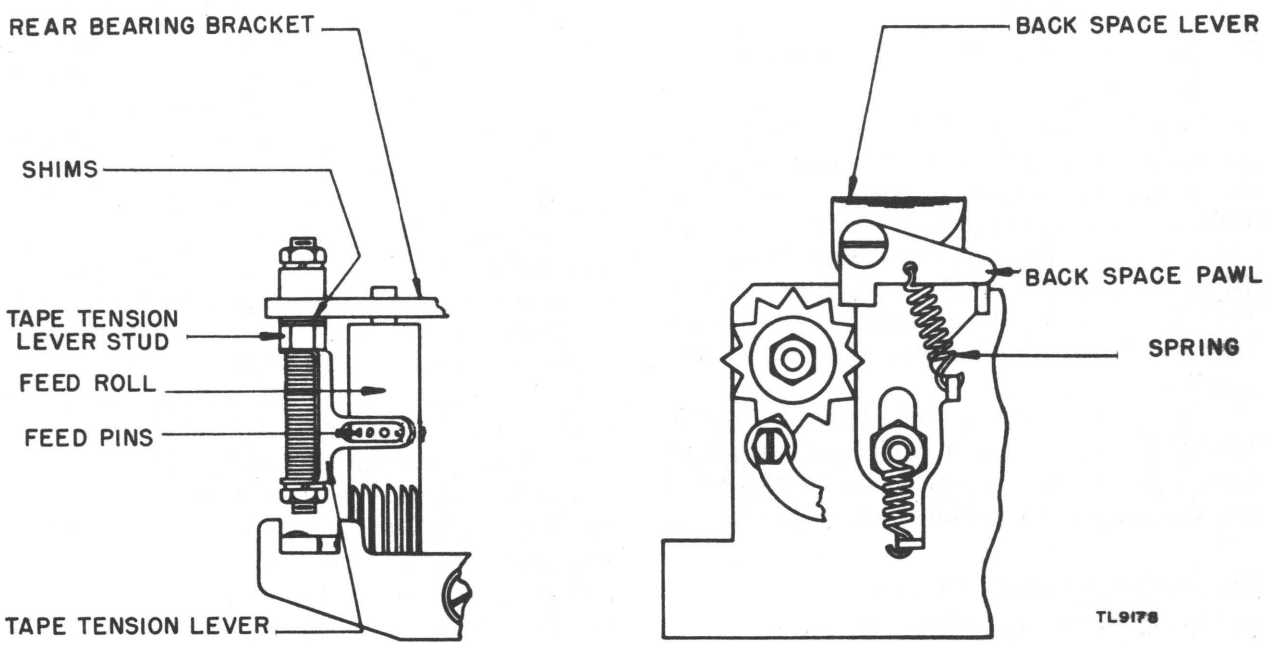

Figure 84. Backspace mechanism.

102. Line and Selector Circuit-Closing Jack

On bases equipped with line relays, the relay mounting plate is sometimes provided with a jack which automatically shunts the line and selector-magnet slip-connection terminals when the relay is removed from its mounting. The purpose of this jack is to permit removal of the relay for examination or replacement without opening the signal line or selector circuit. The jack is mounted on the line-relay mounting plate and its contacts are held open by a plunger which the relay base depresses when the relay is in place.

103. Keyboard Lock-Out

Keyboard bases may be equipped with a device which will prevent the keylevers from being operated. This device is mounted on the front keylever guide and consists of a comb-shaped lever with elongated mounting holes. The keylevers are locked by positioning the lock-out lever so that its projections are under the keylevers. The right-hand end of the lever is provided with a handle.

104. Radio-Frequency Induction Suppressors

Radio-frequency induction suppressors may be connected across various operating contacts to suppress radio-frequency induction, permitting radio receiving sets to be used in close proximity to the typing reperforator.

105. Suppression of Printing on Lower Case Blank Selection

a. DESCRIPTION AND PURPOSE. The typing reperforator may be provided with a mechanism which suppresses printing when the BLANK selection is received while the platen is in the LETTERS position. This is accomplished by means of a projection on the BLANK type bar which strikes a stop plate mounted on the platen block. The stop plate is shown in figure 73.

b. OPERATION. When the platen is in the FIGURES position, the stop plate is moved out of the path of the projection on the BLANK type bar permitting a character to be printed.

106. Unshift-on-Space Pull Bar

a. DESCRIPTION AND PURPOSE. An unshift-on-space pull bar is provided on units arranged to unshift when the code combination for SPACE as well as on LETTERS is received. If the unshift-on-space feature is not desired, move the upper end of the unshift-on-space pull bar to a slot in the pull-bar guide where it will be inoperative.

b. OPERATION. When the SPACE signal is received, the unshift-on-space pull bar is selected and operates the shift rocker lever in the same manner as the LETTERS pull bar. The SPACE and LETTERS pull bars are shown in figure 74.

107. Polar-Neutral Key

a. DESCRIPTION AND PURPOSE. Bases equipped with a relay may be equipped with a polar-neutral key. This key makes the necessary changes in the circuit which permit the reception or transmission of polar signals when the key is pushed in, or neutral (make-break) signals, when the key is pulled out.

b. OPERATION. When a relay is used and the polar-neutral key is in the neutral (pulled-out) position, the circuit is closed through the bias (2–7) winding of the polar relay. Placing the key in the polar (pushed-in) position opens the circuit through the bias (2–7) winding.

108. Circuit Analysis

The following subparagraphs include a brief circuit analysis for each of the typing reperforators discussed in this book. Refer to the appropriate wiring diagrams (figs. 312 through 316) (figs. 312, 314, and 316 are in back of manual) when tracing the various circuits.

a. CIRCUITS OF FPR17. Refer to figure 312. (1) *Receive circuit.* The receive circuit is traced from terminal No. 41 to terminal No. 12, and through the selector magnets to terminal No. 42. When the reperforator unit is removed the line jack closes, thereby completing the line circuit through the contacts instead of through the selector magnets.

(2) *Sending circuit.* The sending circuit is traced from terminal No. 44 through the closed contacts of the break key. At this point the circuit divides; current flows through the keyboard contacts, the choke coil, terminal No. 43, and also through two 0.1-mf capacitors to ground. The arrangement of the choke coil and the two capacitors which are connected to ground serves as a filter which suppresses

radio-frequency interference. The filter circuit also insures an even flow of current, thereby reducing sparking across the keyboard contacts.

(3) *End-of-line indicator lamp circuit.* The end-of-line indicator lamp circuit may be traced from terminal No. 21 through terminal No. 15, and through the closed indicator contacts. (The contacts are closed by the worm follower as it nears the end of the worm gear.) Current flows to terminal No. 14, through the indicator lamp, to terminal No. 13, through the closed motor switch, and to terminal No. 23.

(4) *Power circuit.* The power circuit begins at the connection box of the reperforator transmitter and flows through terminal Nos. 21, 22, and 23. From terminal No. 21 the circuit is traced to terminal No. 15, and to one side of the armature. From terminal No. 23 the circuit is traced through the motor switch, to terminal No. 13, and to the remaining side of the armature. Refer to paragraph 69 for an analysis of the motor circuit.

b. CIRCUITS OF FPR5. Refer to figure 313. (1) *Receive circuit.* The receive circuit may be traced from the tip of the receive plug to terminal No. 12, to one selector magnet, and through the other magnet to terminal No. 11 and to the sleeve of the plug.

(2) *Power circuit.* The power circuit is traced from one prong of the power plug, to terminal No. 13, through the motor windings, to terminal No. 15, and back to the other prong of the plug.

c. CIRCUITS OF FPR21. Refer to fig. 314. (1) *Receive circuit.* Trace the receive circuit from the sleeve of the red shell plug to terminal No. 42, to terminal No. 45, to terminal No. 11, and through the selector magnets to terminal No. 12. If the series-parallel switch is in the *series* position, the total resistance of the selector magnets is 210 ohms; if the switch is in the *parallel* position, the resistance of the magnets is approximately 53 ohms. From terminal No. 12 the circuit is traced to terminal No. 46, to terminal No. 41, and to the tip of the red shell plug. One lead to the line jack is connected between terminal Nos. 11 and 45, the other lead is connected between terminal Nos. 12 and 46.

(2) *Power circuit.* The power connections are made to terminal Nos. 21, 22, and 23. From terminal No. 23 the circuit goes through terminal No. 13 to one side of the armature. From terminal No. 22 the circuit is traced through terminal No. 15 to the remaining side of the armature. The motor switch is connected between terminal Nos. 21 and 22.

(3) *Synchronizing circuit.* The clutch lever contacts when closed complete a synchronizing circuit, housed within the equipment table, which transmits artificial start impulses. (See TM 11–2210.)

d. CIRCUITS OF FPR23. Refer to figure 315. (1) *Receive line circuit.* The receive (signal) circuit may be traced from the tip of the red shell plug to terminal No. 42, to terminal No. 6 of the line relay base, through a winding of the relay, to terminal No. 3 of the relay base, to terminal No. 41, and to the sleeve of the red shell plug. If the relay is not used as shown in figure 316 the circuit is traced from the tip of the red shell plug, to terminal No. 42, to terminal No. 6 of the relay mounting, through closed contacts of the circuits-closing jack, to terminal No. 3, to terminal No. 41, and the sleeve of the red shell plug. A lead is also connected to terminal No. 3 of the relay mounting through a 0.01-mf capacitor to ground.

(2) *Selector magnet circuit.* The selector magnet circuit is traced from terminal No. 25 (negative) through the 600-ohm resistor to relay terminal No. 1, to relay armature, to relay "M" contact, to relay terminal No. 4, through the 400-ohm resistor, through a 600-ohm resistor, to terminal No. 45, to one side of the line jack to terminal No. 12, through the selector magnet to terminal No. 11, to the other side of the line jack to terminal No. 46, and to terminal No. 24 (positive). This circuit is established for a marking impulse. The line jack closes the line when the reperforator unit is removed from the base, preventing an open circuit to other teletypewriter equipment which may be connected to the reperforator. The line jack will also short-circuit the selector magnet if it is not opened by the insulating block when the reperforator unit is set on the base. A separate circuit is shunted around the magnet at the same time the magnet circuit is opened at the relay contacts for a spacing impulse. This shunt circuit is the same as the regular magnet circuit up to and including the relay

armature, to the "S" contact, to relay terminal No. 5, through a 400-ohm resistor, through 810-ohm resistor to terminal No. 24. This circuit is in effect during a spacing impulse. The two 0.1-mf capacitors connected in series across relay terminal Nos. 4 and 5, and the 0.01-mf capacitor connected between terminal No. 5 and ground serve as a filter to suppress sparking at the relay contacts.

(3) *Motor circuit.* The motor circuit may be traced from one prong of the 110-volt a-c plug to terminal No. 22, to terminal No. 13, and to one side of the armature. The other power lead goes from the remaining prong of the plug to terminal No. 23, to terminal No. 15, and to the other side of the armature. The motor switch is connected across terminal Nos. 21 and 23.

(4) *Power circuit.* The power circuit is traced from the minus prong of the 120-volt d-c power cord plug to terminal No. 25. After terminal No. 25 the circuit divides, current flows through a 2,000-ohm resistor to terminal No. 40, to terminal No. 27, to terminal No. 29, to terminal No. 2 on the relay base, through a winding of the relay, to terminal No. 7, to terminal No. 34, through a 2,000-ohm resistor, to terminal No. 24, and to the positive prong of the power plug. A lead is connected to one end of the 2,000-ohm resistor (after terminal No. 25) to one end of a 600-ohm resistor as mentioned in (2) above.

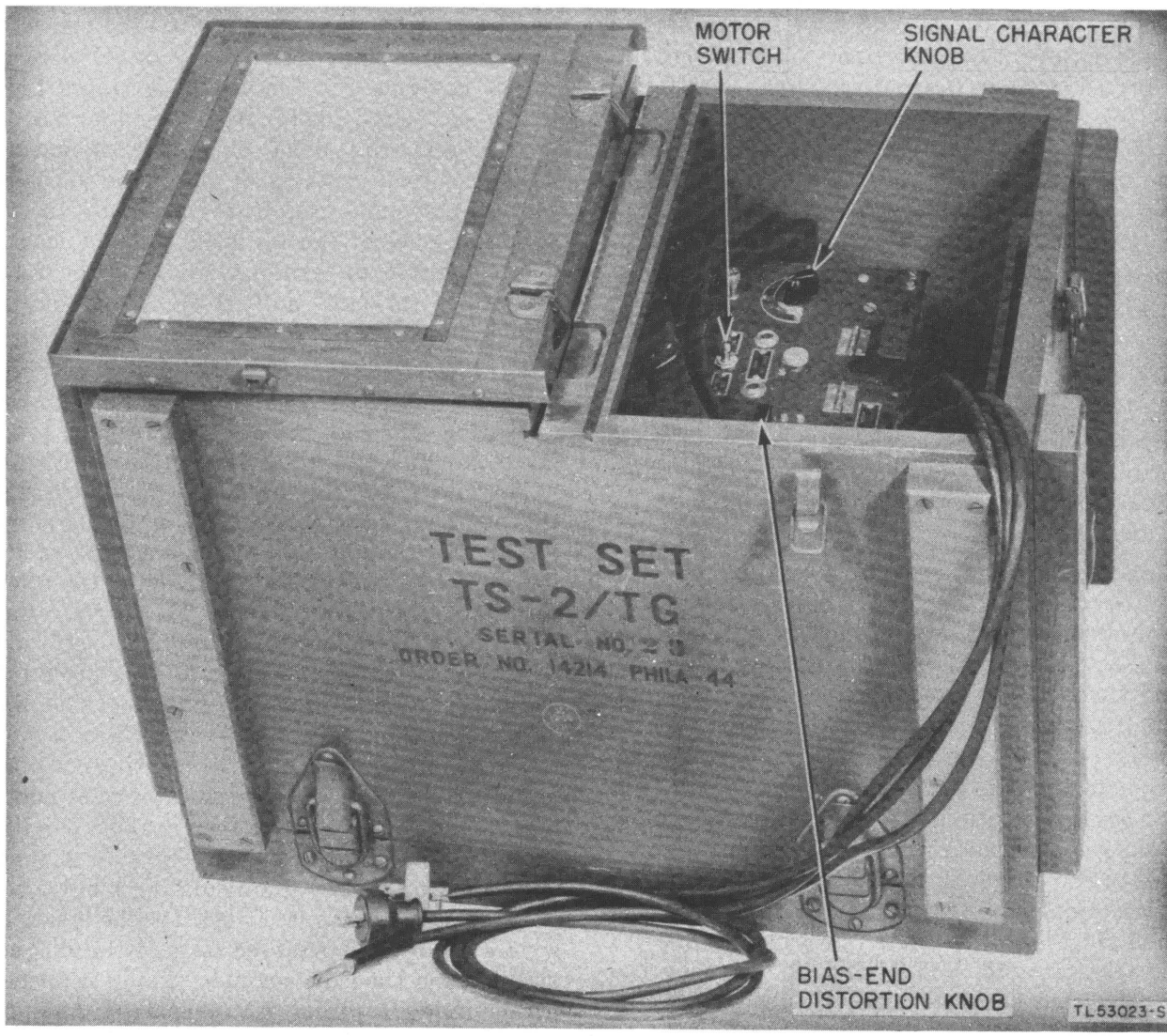

Figure 85. Test Set TS-2/TG with chest cover open.

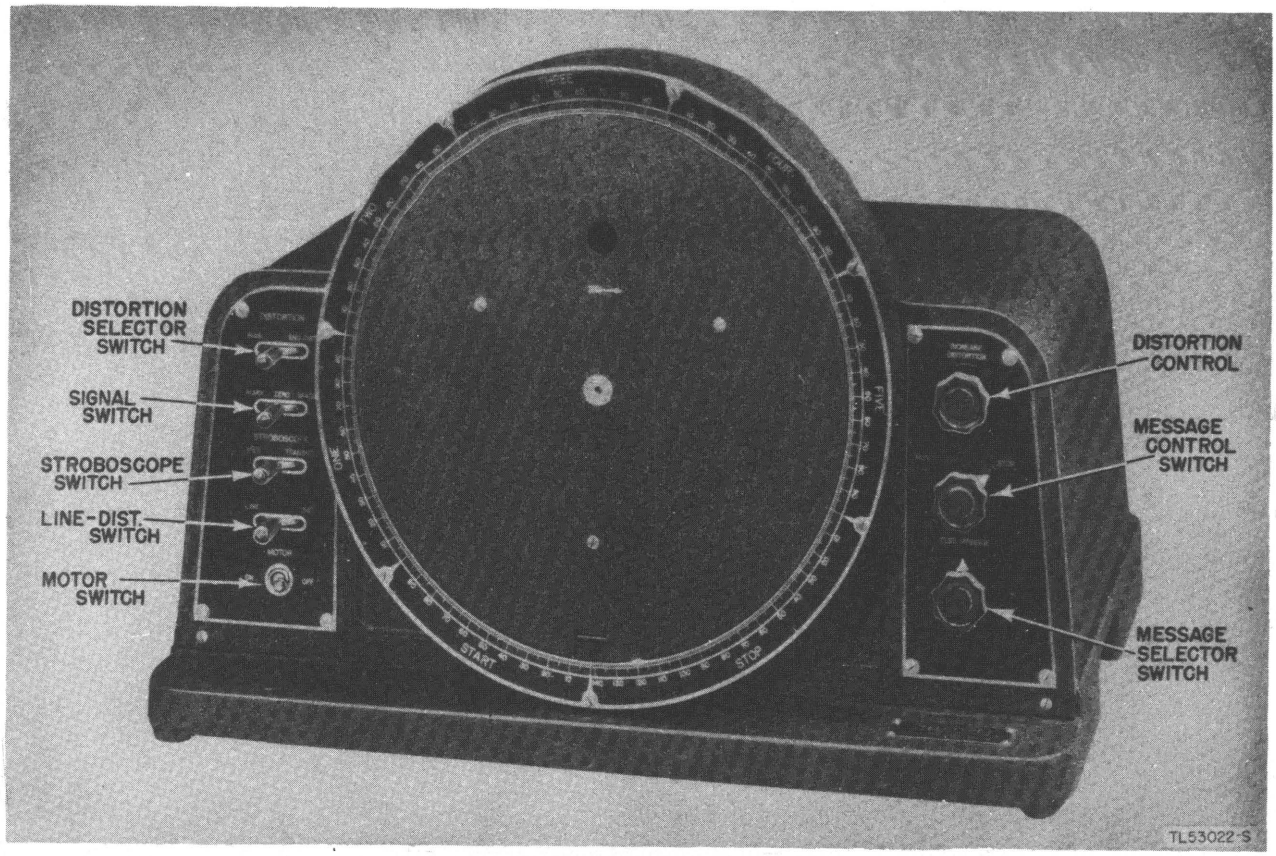

Figure 86. Distortion Test Set TS–383/GG.

Section XII. TEST EQUIPMENT

109. Test Sets

a. GENERAL. Any of the commonly used volt-ohm-milliammeters are satisfactory for testing the current flow in, and continuity, insulation, or resistance of the electrical circuits in the teletypewriter. The subparagraphs below give a brief description and the purpose of the other test sets most frequently used by teletypewriter repairmen.

b. TEST SET TS–2/TG. Test Set TS–2/TG (fig. 85) is a portable, motor-driven unit arranged to transmit normal or distorted signals for testing teletypewriter circuits and checking the efficiency of start-stop selector units on teletypewriters. It sets up two types of distortion, marking or spacing bias, and marking or spacing end distortion. Any one of four test signals: R, Y, SPACE, or a test message, may be transmitted continuously by the test set. For a detailed description of this test set, refer to TM 11–2208.

c. DISTORTION TEST SET TS-383/GG. Distortion Test Set TS-383/GG (fig. 86) is a motor-driven unit normally used in the larger repair shops. In addition to the characters and functions transmitted by Test Set TS-2/TG, Distortion Test Set TS-383/GG will transmit the Y, T, O, M, V, and LETTERS characters and functions. These transmissions are sent either undistorted or with a controlled degree of distortion up to 100 percent. Distortion Test Set TS–383/GG is also designed to receive and analyze distortion in the transmitting circuit of a teletypewriter. Refer to TM 11–2217 for a complete description of this test set.

d. TEST SET I–193–A. Test Set I–193–A (fig. 87) is a compact, portable unit which provides electrical circuits for testing and adjusting

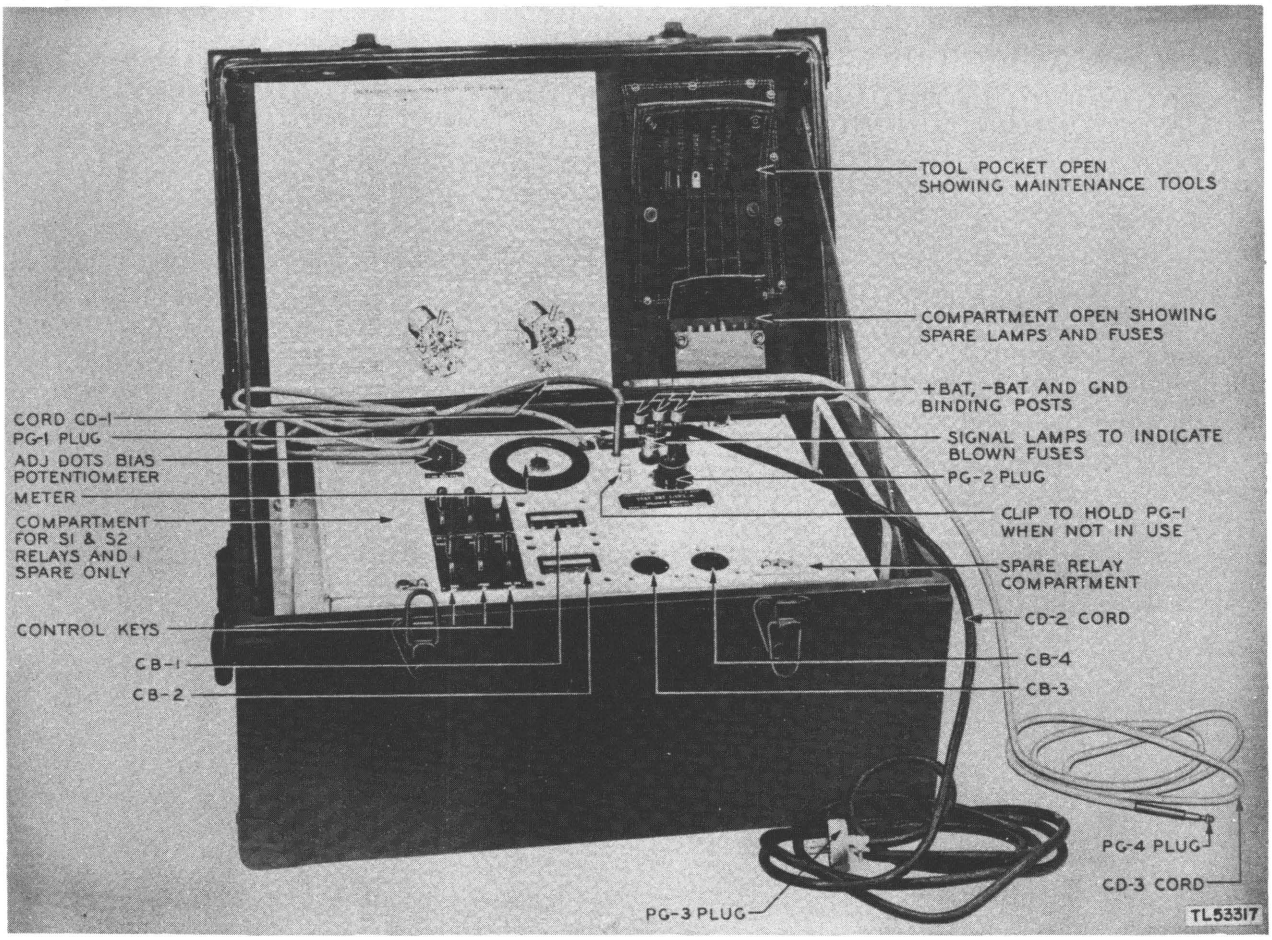

Figure 87. Test Set I—193—A with cover raised.

polar relays. Use of the test set enables the repairman to accurately adjust the relay to its proper operating requirements. Refer to TM 11–2513 for complete instructions on using the I–193–A test set.

e. TEST UNIT I–236. Test Unit I–236 (fig. 88) is designed to check the continuity of teletypewriter circuits, to differentiate between a-c and d-c voltages, to check fuses, and to test capacitors. Refer to TM 11–2056 for a complete description of this test unit.

110. Additional Tools

a. GENERAL. The detailed repair instructions in section XIV refer to the use of certain tools which are not furnished as part of Tool Equipment TE–50. These additional tools, or their equivalents, are usually available in higher echelon maintenance kits intended for use where extensive reperforators repairs are completed. In some instances where tools are not available, suitable substitutes may be improvised for use in higher echelon shops. Lower echelons should not attempt repairs which are the responsibility of higher echelon shops. Refer to paragraph 48 and figure 34 for a complete listing and illustration of tools furnished in Tool Equipment TE–50. The additional tools are listed in *b* below.

b. LIST OF ADDITIONAL TOOLS. Figure 90 illustrates the bearing puller which is included among the additional tools referred to in the test and repair instructions. The Signal Corps stock numbers are listed in the table below.

c. DRILLS, TAPS, DIES, CLAMPS, ETC. A set of various sizes of drills, (carbon or high-speed

steel) and either a hand drill or an electrical drill should be available for making new parts or reworking old parts. A set of taps and dies for several common sizes of screws and bolts should also be available. Clamps may be any type or suitable size.

Signal Corps stock No.	Name of tool	Description
4T84020	Bearing puller	Designed for removing all types of teletypewriter motor armature bearings.
6R46290	Undercutter, mica	Designed for cutting commutator segments.
6R4774-6	Pliers, short-nose	Heavy, 6" long, 1" wide; general use.
4T76289	Wrench, slotted nut	Designed for holding the adjustable clutch disk of mainshaft friction clutch while the locknut is being tightened against it.
	Spanner wrench	Designed to hold adjustable clutch disk while tightening the locknut against it.

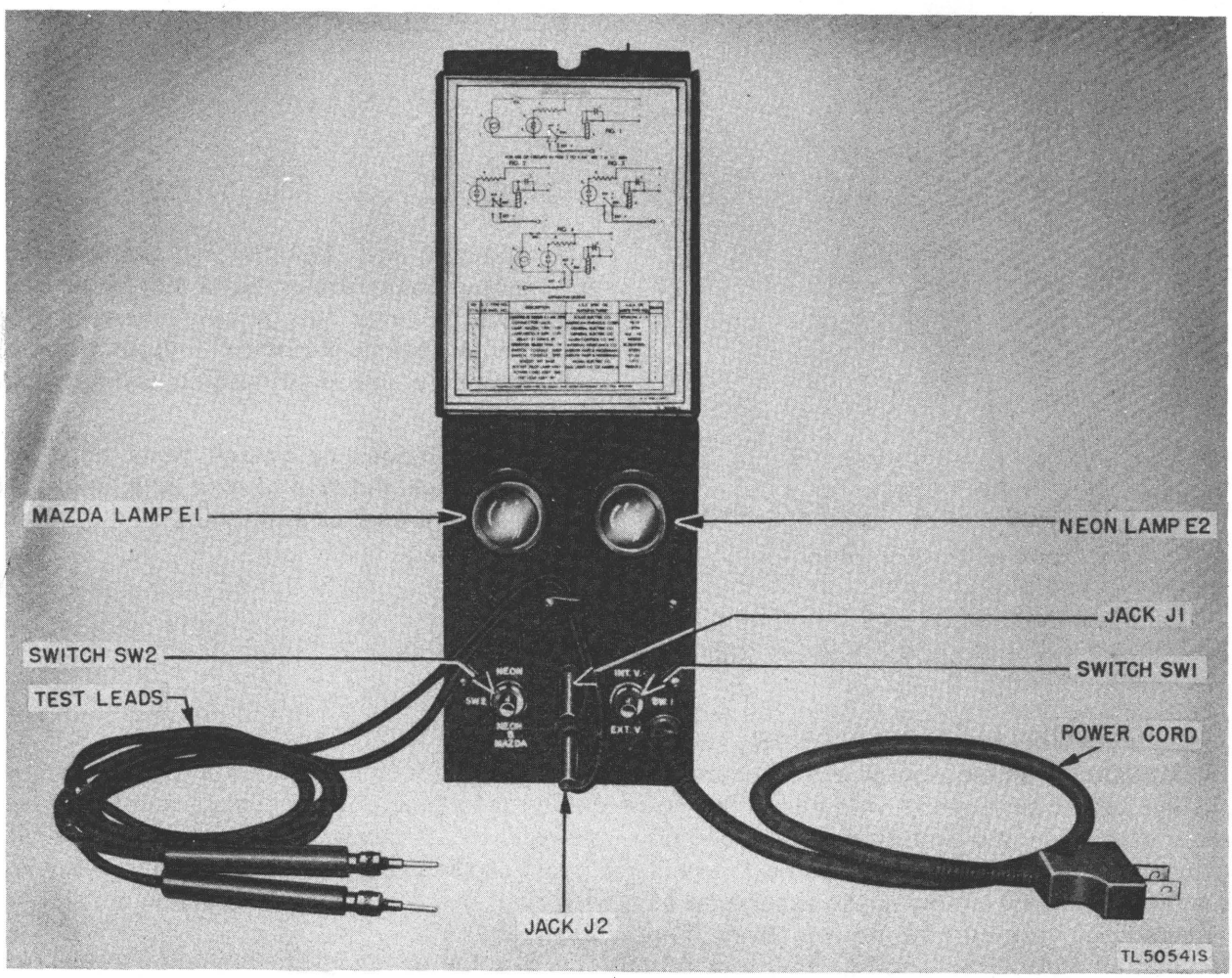

Figure 88. Top view of Test Unit I—236.

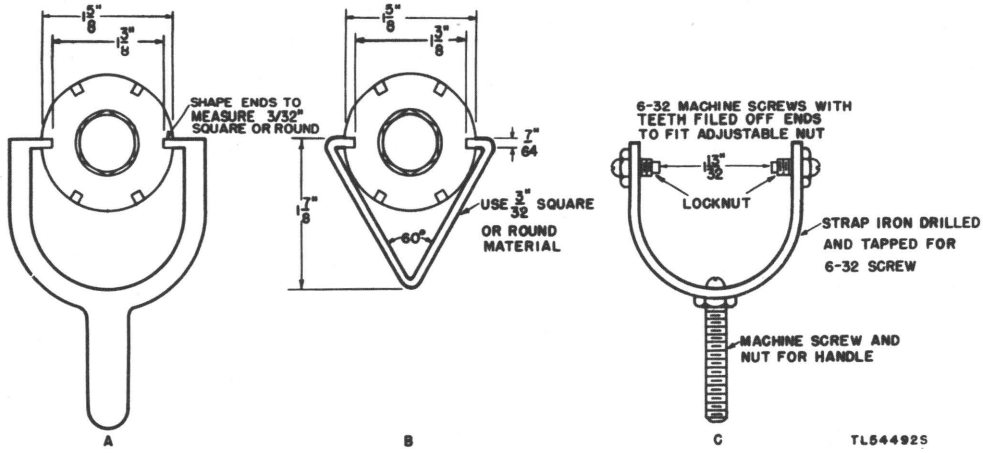

Figure 89. Spanner wrenches.

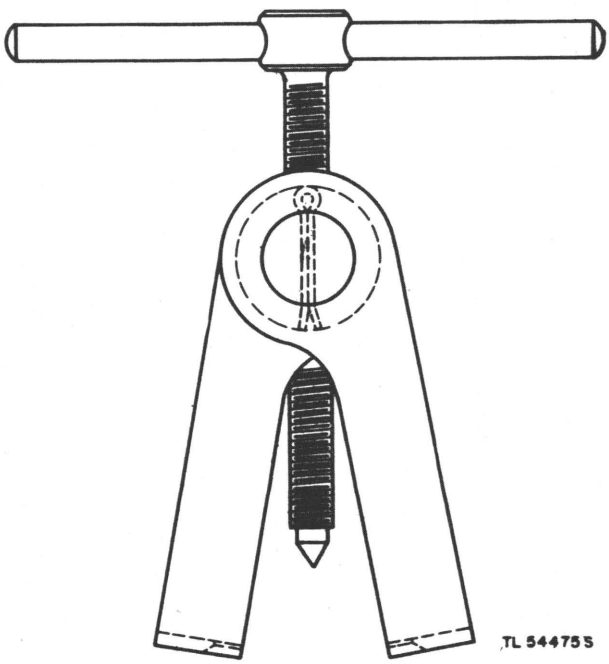

Figure 90. Bearing puller.

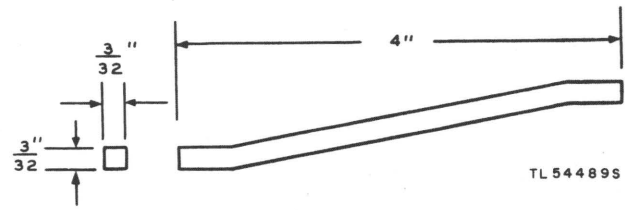

Figure 91. No. 76289 wrench.

d. WELDING AND BRAZING EQUIPMENT. In emergencies, many broken parts may be welded or brazed. However, this procedure is very difficult and should be performed *only* by personnel thoroughly skilled in welding and brazing techniques.

Caution: Welded or brazed parts must be properly alined and free of excessive build-ups which would reduce clearances below minimum requirements.

Section XIII. TROUBLE SHOOTING

111. Introduction to Trouble Shooting

a. GENERAL. There are several factors to consider before proceeding with the actual locating of trouble. No definite rules can be laid down as to the exact procedure to be followed because of wide variations in the experience of the personnel working with the equipment. The information and trouble-analysis charts in this section are intended to provide both a step-by-step procedure for the inexperienced and a ready reference for the experienced trouble shooter. In all cases, the origin of the trouble report or the manner in which the trouble was detected will determine the procedure to be followed.

b. SOURCE OF TROUBLE REPORTS. Figure 92 is an example of a typical trouble record.

Troubles reported may be divided into two classes:

(1) Troubles that are reported in such a manner that they may be due either to a failure of the typing reperforator or a failure in other equipment or connecting facilities. In some cases, these troubles may be intermittent and require extensive routine checks of all equipment and facilities before they can be definitely located. The substitution of typing reperforators known to be in good condition is frequently the fastest method of proving which part of the circuit is the source of the intermittent trouble.

(2) Troubles which are readily apparent or which are definitely identified by a trouble report as being located in a particular part or unit.

c. TROUBLES DETECTED BY INSPECTION. Trouble found during routine check of the equipment or while inspecting the equipment during a major overhaul will usually be definite in nature. In some cases, however, these troubles may require detailed analysis using special testing equipment discussed in section XII.

d. TROUBLE ANALYSIS. Thorough knowledge of the sequence of operation for each functioning element in the typing reperforator is of fundamental importance in analyzing trouble. The trouble shooter must be able to prove quickly whether trouble is in a particular assembly or in other parts of the reperforator. The appearance of a particular operating failure may immediately indicate the exact location of the faulty adjustment or the damage; if not, it will be necessary to determine with exactness those functions which are operating properly and those which are failing to do so.

e. PROCESS OF ELIMINATION. By determining which of the transmitting, receiving, and common functions of the reperforator do, and which do not operate properly, the trouble shooter will eliminate the possibility of wasting time and effort. The trouble-analysis chart listing the most commonly-observed faults is of considerable assistance in determining the best sequence and testing procedure for a particular condition. By sending to and receiving from a second reperforator or teletypewriter, the trouble is proved to be in either the transmitting, receiving, or common functions. A local or dummy testing circuit can also be used when a second typing reperforator is not readily available. When a definite observed fault has been found, refer to the paragraph for a related list of indicated conditions and select the items that would logically be the cause of the fault.

f. LOCALIZING TROUBLE. When it has been determined either by observation or testing which of the units or functions is causing the trouble the next step is to isolate or localize the trouble in a particular electrical circuit or mechanical element. The trouble-analysis charts listed in paragraph 112 provide reference data for both electrical and mechanical failures. Information on the best procedures for locating the more common troubles are furnished in paragraphs 113 through 125.

TYPING REPERFORATOR TROUBLE RECORD

TG-26-A MODEL		FK105KH BASE	SERIAL NUMBERS 105738 MOTOR UNIT	FPR17FN226 REPERFORATOR UNIT	SET NO. 4		
DATE	TIME	REPORTED BY	TROUBLE REPORTED	DISPOSITION	DATE	TIME	CLEARED BY
4 DEC	0725	R.K.E.	MOTOR FAILS TO START.	OILED MAIN SHAFT.	4 DEC	0745	H.M.G.
11 DEC	1944	A.R.B.	RIBBON FAILS TO REVERSE	TIGHTENED RIBBON SHAFT COLLAR	11 DEC	2005	W.R.R.
19 DEC	1030	P.H.R.	PRINTS INCORRECT LETTERS AT TIMES.	CLEANED GOVERNOR CONTACTS.	19 DEC	0630	C.E.L.

TL55859S

Figure 92. Typical trouble record.

112. Tabular List of Trouble Conditions for Typing Reperforators

Chart	Condition	Observed fault
A		Motor fails to start.
B	Starts.	Runs open.
C	Runs closed.	Cannot send.
D	Runs closed.	Cannot receive.
E	Prints and perforates.	Range finder has poor range.
F	Prints and perforates.	Prints scrambled letters or occasional errors.
	TYPING REPERFORATOR OPERATES CORRECTLY EXCEPT:	
G		Ribbon remains motionless or does not oscillate.
H		Ribbon does not reverse.
I		Tape-perforator assembly does not cut proper or clean tape.
J		Tape feed-out control mechanism fails to operate properly.
K		Platen mechanism fails to function properly.
L		Emits grinding noise.
M		Bell does not operate (letter S prints correctly).
N		Tape-out alarm bell fails to operate.
O		Fails to print properly.

Trouble-analysis chart A. Typing reperforator fails to start

Item No.	Items to be inspected or checked	Possible trouble	Corrective action	Reference data		
				Detailed function	Repairs	Adjustments
1	Power source.	Open, low voltage, poor voltage regulator	Use another power source.		Par. 114	
2	Governor contacts.	Open, dirty, or burned away.	Clean or replace and adjust.	Par. 69	Pars. 115, 121, 146, 148-150	Pars. 215, 217
3	Slip connections.	Open contacts between base and reperforator unit.	Clean and adjust contact.	Pars. 2*b*, *c*; 4*b*; 5*b*	Par. 121	Par. 198
4	Motor (internal).	Open windings, poor brushes.	Replace brushes or motor.		Pars. 115, 121, 140-143	
5	Main shaft.	Clutches dry, or bearings frozen tight	Locate and correct trouble in typing unit.	Pars. 70, 85	Pars. 121, 163, 164	Par. 224

Note. See figures 312 to 317 inclusive for wiring diagrams of the typing reperforators.

Trouble-analysis chart B. Motor starts but typing reperforator runs open

Item No.	Items to be inspected or checked	Possible trouble	Corrective action	Reference data		
				Detailed function	Repairs	Adjustments
1	External circuits. a. Line connections.	Line open or shorted.	Inform wire chief.	Pars. 2*b*, 4*b*, 5*b*	Par. 113	
	b. D-c voltage source.	No voltage, voltage low, or wrong polarity.	Replace fuse, or reverse polarity.			
	c. Signal turn-over.	Space received instead of mark.	Reverse line leads if on polar operation.	See TM 11-2005	Pars. 113, 125	
2	Wiring (internal).	Damaged or excessively oil-soaked.	Repair or replace.	Par. 113	Pars. 113d, 115, 166	
3	Selector magnet circuit.	Circuit open or shorted.	Check back from receiving plug.	Par. 81	Pars. 113d, 122, 160	Pars. 241, 242, 244
4	Keyboard transmitter circuit.	Circuit open.	Check back from black SEND plug.	Par. 71	Pars. 113d, 156-158	Pars. 186-188
5	Selector trip-off eccentric screw.	Operates trip-latch when armature is in mark position.	Adjust.	Par. 81	Pars. 122, 160	Pars. 240, 260
6	Main-shaft clutch throw-out lever.	Loose spring.	Adjust.	Par. 85	Pars. 122, 163, 164	Pars. 225, 226
7	Slip connections.	Contacts dirty or open.	Clean and adjust.	Pars. 2*b*, *c*; 4*b*; 5*b*	Pars. 121, 166	Par. 198

Note. See figures 312 to 316 inclusive for wiring diagrams of the typing reperforators.

Trouble-analysis chart C. Typing reperforator runs closed but cannot send

Item No.	Items to be inspected or checked	Possible trouble	Corrective action	Reference data		
				Detailed function	Repairs	Adjustments
1	Transmitter contacts and wiring.	Contacts or wiring shorted	Locate and remove short circuit.	Pars. 17, 71	Pars. 113, 118, 158	Pars. 187, 188
2	Sending plug (black shell).	Plug shorted.	Remove short or replace plug.		Par. 118	
3	Trip-off pawl eccentric screw (keyboard).	Trip-off pawl does not engage intermediate pawl.	Readjust eccentric screw.	Par. 74		Pars. 173, 192, 194
4	Trip-off pawl spring.	Spring weak or broken.	Readjust or replace spring.	Par. 74		Pars. 192, 196
5	External connections.	Send jack shorted, or defective external relay.	Check operation with dummy test circuit.	Pars. 2*b*, 4*b*, 5*b*, 113	Par. 116	

Note. See figures 312 to 316 inclusive for wiring diagrams of the typing reperforators.

Trouble-analysis chart D. Typing reperforator runs closed but cannot receive

Item No.	Items to be inspected or checked	Possible trouble	Corrective action	Reference data		
				Detailed function	Repairs	Adjustments
1	External equipment.	Improper relay adjustment. Improper switch positions.	Refer to TM on associated equipment.		Par. 113	
2	Selector armature spring (if used).	Spring loose or broken.	Adjust or replace.	Par. 81	Pars. 113d, 115, 125, 160	Par. 254
3	Selector armature.	Armature pivots binding.	Loosen and adjust.	Par. 81	Par. 160	Pars. 230, 243
4	Selector trip-off eccentric screw.	Does not operate trip-latch plunger.	Adjust.	Par. 81	Par. 160	Pars. 240, 260
5	Main-shaft clutch throw-out lever.	Not operated by sixth cam of selector cams.	Adjust.	Par. 85	Pars. 163, 164	Pars. 225, 226
6	Receive circuit.	Open or short.	Clear open or short.	Pars. 17, 108	Par. 119	

Note. See figures 312 to 316 inclusive for wiring diagrams of the typing reperforators.

Trouble-analysis chart E. Typing reperforator prints and perforates but range finder has poor range

Item No.	Items to be inspected or checked	Possible trouble	Corrective action	Reference data		
				Detailed function	Repairs	Adjustments
1	Motor.	Speed incorrect.	Adjust with tuning fork.	Pars. 68, 69	Pars. 137-145	Pars. 29, 216
2	Motor governor.	Governor contacts burned.	Clean or replace.	Par. 69	Pars. 115, 138, 146, 148-150	Pars. 215, 217, 220, 221
3	Line current.	Too low or too high.	Adjust to 60 ma or use line relay and adjust bias.			
4	Selector armature spring.	Improper tension.	Adjust.	Par. 81	Pars. 113d, 115, 125, 160	Par. 254
5	Selector armature pivots.	Too tight.	Adjust.	Par. 81	Par. 160	Pars. 230, 243
6	Binding of swords, T-levers, bell cranks, or code bars.	Adjustments too tight, wrong lubricant, or dirt in moving parts.	Clean and adjust.	Pars. 81, 82, 87	Par. 160	Pars. 229, 231-233, 246, 251, 303, 304

Trouble-analysis chart E. Typing reperforator prints and perforates but range finder has poor range. (Con't.)

Item No.	Items to be inspected or checked	Possible trouble	Corrective action	Reference data		
				Detailed function	Repairs	Adjustments
7	Bell cranks.	Improper adjustment.	Readjust.	Pars. 81, 82, 87		Pars. 291, 303
8	Selector-cam sleeve.	Worn.	Replace.	Pars. 70, 81	Par. 163	Pars. 224, 317
9	Teletypewriter equipment at other end of circuit.	Teletypewriter slow or fast.	Request check motor speed.			
10	Selector mechanism.	Improper adjustment.	Make complete adjustment.	Par. 81	Pars. 125, 160	Pars. 228-235, 240-244

Note. See figures 312 to 316 inclusive for wiring diagrams of the typing reperforators.

Trouble-analysis chart F. Typing reperforator prints and perforates scrambled letters or occasional errors

Item No.	Items to be inspected or checked	Possible trouble	Corrective action	Reference data		
				Detailed function	Repairs	Adjustments
1	Line current.	Too low or too high.	Adjust to 60 ma or adjust line relay bias if using receive relay.	Par. 101		Par. 493 TM 11-2513
2	Range-finder assembly.	Improper setting.	Adjust to center of operating limits.	Par. 83	Par. 160	Par. 32
3	Keyboard sending contacts.	Contacts dirty or improperly adjusted.	Clean and adjust.	Pars. 17, 71	Pars. 113, 118, 158	Pars. 187, 188
4	Motor speed a. too high.	Shorted governor contacts, or governor adjustment.	Adjust speed with tuning fork.	Pars. 68, 69		Pars. 29, 216, 217, 220, 221
	b. too low.	Governor adjustment. Contacts burned. Excessive mainshaft friction clutch drag.	Adjust speed with tuning fork. Clean or replace contacts. Lubricate mainshaft gears and clutches.	Pars. 68, 69 Par. 70	Pars. 115, 146, 148-150 Pars. 54e, 163, 164	Pars. 29, 216, 217, 220, 221
5	See also chart E. Items 1 to 10 inclusive.					

Note. See figures 312 to 316 inclusive for wiring diagrams of the typing reperforators.

Trouble-analysis chart G. Typing reperforator prints but ribbon remains motionless or does not oscillate

Item No.	Items to be inspected or checked	Possible trouble	Corrective action	Reference data		
				Detailed function	Repairs	Adjustments
1	Ribbon spool-shaft and feed-shaft spur gears, and feed-shaft bevel-gears.	Gear setscrews loose or missing. Spur gears do not mesh.	Adjust, tighten and replace missing parts.	Par. 90		Pars. 267, 268, 269
2	Spool-shaft collar and spring.	Collar loose.	Adjust collar for correct spring compression.	Pars. 90, 91		Pars. 267, 269, 274
3	Feed-shaft detent-spring.	Missing or improper adjustment.	Replace, adjust.	Pars. 90, 91		Par. 275
4	Ribbon.	No eyelet near end to operate ribbon-reverse arm.	Replace, ribbon.	Par. 30		
5	Ribbon-reverse shaft.		Adjust.	Par. 91	Par. 160	Pars. 271, 272, 324
6	Ribbon-reverse pawl spring.	Loose or missing.	Replace.	Par. 91	Par. 160	Par. 281
7	Ribbon-reverse pawl.	Improper adjustment.	Adjust.	Par. 91	Par. 160	Pars. 273, 281
8	Ribbon feed-shaft ratchet.	Missing or worn teeth.	Replace.	Par. 90		Pars. 278, 280
9	Ribbon guide.	Bent or broken.	Replace.	Par. 30	Par. 160	Par. 306
10	Ribbon spool.	Not seated on spool shaft and pin.	Adjust.	Pars. 30, 90	Par. 160	Pars. 268, 270

Note. See figures 312 to 316 inclusive for wiring diagrams of the typing reperforators.

Trouble-analysis chart H. Typing reperforator prints but ribbon does not reverse

Item No.	Items to be inspected or checked	Possible trouble	Corrective action	Reference data		
				Detailed function	Repairs	Adjustments
1	Ribbon-reversing eyelets.	Missing or too near ribbon end.	Replace ribbon.	Pars. 30, 91		
2	Ribbon feed-shaft.	Sticks or incorrect adjustment.	Adjust.	Pars. 90, 91		Pars. 267, 275
3	Ribbon-spool shaft collar.	Collar loose.	Adjust and tighten.	Pars. 90, 91		Par. 267
4	Ribbon-reverse lever.	Improper angular adjustment.	Adjust and tighten.	Par. 90	Par. 160	Par. 281
5	Ribbon-reverse pawl springs.	Missing or broken.	Replace and check tension.	Par. 91	Par. 160	Par. 281

Note. See figures 312 to 316 inclusive for wiring diagrams of the typing reperforators.

Trouble-analysis chart I. Typing reperforator prints but does not cut proper or clean tape

Item No.	Items to be inspected or checked	Possible trouble	Corrective action	Reference data		
				Detailed function	Repairs	Adjustments
1	Punch-block assembly.	Improper alinement, binding, or dirty.	Clean or adjust.	Par. 88	Par. 165	
2	Punches.	Broken, worn, or dirty.	Clean or adjust.	Par. 88	Par. 165	Par. 295
3	Guide comb.	Improper alinement.	Adjust.	Par. 88	Par. 165	Par. 294
4	Tape guide.	Clogged with gum and dirt, or bent.	Clean or adjust.	Par. 31		Pars. 309, 313
5	Feed pawl.	Worn teeth on star wheel, weak spring.	Replace wheel or adjust spring.	Par. 89		Pars. 290, 298, 307
6	Feed roll.	Missing or broken feed pins.	Replace roll.	Par. 89		Pars. 287, 288, 289, 297, 299, 300
7	Upstop screw.	Improper adjustment.	Adjust.	Par. 88	Par. 165	Pars. 295, 296
8	Punch selector fingers.	Punch-engaging projection bent or broken.	Adjust or replace.	Par. 88	Par. 165	Pars. 286, 293, 294

Note. See figures 312 to 316 inclusive for wiring diagrams of the typing reperforators.

Trouble-analysis chart J. Typing reperforator prints and perforates but tape feed-out control mechanism fails to operate properly

Item No.	Items to be inspected or checked	Possible trouble	Corrective action	Reference data		
				Detailed function	Repairs	Adjustments
1	Push-button contacts.	Sprung, dirty, shorted, or burned.	Clean, adjust, or replace.	Par. 97		Pars. 335, 336
2	Feed-out control circuit.	Open or shorted.	Locate and clear open or short.	Par. 96		
3	Worm gear.	Worn gear threads, or worn ratchet.	Replace.	Par. 96		
4	Worm follower.	Broken, worn, or missing.	Replace.	Par. 96		Par. 344
5	Worm-follower spring.	Loose, missing, or incorrect tension.	Adjust or replace.	Par. 97		Pars. 322, 332
6	Feed-pawl spring.	Loose or missing.	Adjust or replace.	Par. 96		Pars. 333, 347
7	Worm-follower disengaging magnet.	Shorted, loose connections, or open winding.	Clear short, tighten connections, or replace magnet.	Par. 96		Pars. 318-321, 328, 329, 330
8	Worm-follower disengaging armature spring.	Loose or missing.	Adjust or replace.	Par. 96		Par. 323

Note. See figures 312 to 316 inclusive for wiring diagrams of the typing reperforators.

Trouble-analysis chart K. Typing reperforator prints and perforates but platen mechanism fails to function properly

Item No.	Items to be inspected or checked	Possible trouble	Corrective action	Reference data		
				Detailed function	Repairs	Adjustments
1	Rubber platen disk.	Worn or missing.	Replace.	Par. 93	Par. 160	
2	Platen shaft.	Improper lubrication or dirty shaft well.	Lubricate or clean.	Par. 93	Par. 160	Pars. 301, 311
3	Platen-shift spring.	Loose, broken, or improper tension.	Adjust or replace.	Par. 93	Par. 160	Par. 310
4	Platen-shift rocker.	Improper adjustment.	Adjust.	Par. 93	Par. 160	Par. 305
5	Shift lever.	Bent or improper adjustment.	Adjust or replace.	Par. 93	Par. 160	Pars. 305, 312
6	Shift rocker arm.	Lock-out lever arm out of engagement with lever.	Adjust.	Par. 93	Par. 160	Pars. 302, 305

Note. See figures 312 to 316 inclusive for wiring diagrams of the typing reperforators.

Trouble-analysis chart L. Typing reperforator prints and perforates but emits grinding noise

Item No.	Items to be inspected or checked	Possible trouble	Corrective action	Reference data		
				Detailed function	Repairs	Adjustments
1	Reperforator unit mounting plate.	Bent out of line.	Replace with complete unit.			
2	Main-shaft bearings.	Bearings broken or burned.	Replace and lubricate.	Par. 70	Pars. 54e, 163, 164	
3	Motor-mount adjusting screws.	Improper drive gear clearance.	Adjust.			Par. 227
4	Transmitting shaft.	Fiber gear worn or bearings worn.	Replace worn parts.	Par. 17	Par. 156	
5	Transmitter clutch throw-out lever.	Clutch clearance.	Adjust.	Pars. 71b, 72a, 74	Par. 157	Pars. 189, 195, 213
6	Main-shaft clutch throw-out lever.	Improper clutch clearance.	Adjust.	Par. 85	Pars. 163, 164	Pars. 222, 225, 226
7	Main-shaft gear, motor pinion gear.	Improper lubrication.	Lubricate.	Par. 70	Pars. 54e, 121, 163, 164	
8	Transmitting-shaft clutch.	Worn or broken teeth.	Replace.	Pars. 71b, 72	Par. 157	Par. 190
9	Motor (internal).	Worn or dirty bearings.	Clean or replace.	Par. 68	Pars. 138, 144	Par. 492

Note. See figures 312 to 316 inclusive for wiring diagrams of the typing reperforators.

Trouble-analysis chart M. Typing reperforator prints and perforates but bell does not operate (letter S prints correctly)

Item No.	Items to be inspected or checked	Possible trouble	Corrective action	Reference data		
				Detailed function	Repairs	Adjustments
1	Bell pull-bar spring.	Missing or broken.	Replace.	Pars. 86, 94	Par. 159	Par. 262
2	Pull-bar lock-out lever.	Binds or mounting screws missing or broken.	Adjust, or replace defective parts.	Par. 94		Par. 337
3	Bell-hammer spring.	Missing or broken.	Replace.	Par. 94	Par. 160	Par. 179
4	Bell hammer.	Binds at pivots.	Adjust pivots.	Par. 94		Par. 338
5	Lock-out lever arm.	Missing or broken.	Replace.	Par. 94		
6	Pull-bar lock-out lever mounting screw.	Missing or broken.	Replace.	Par. 94		
7	Eccentric screw.	Adjustment.	Adjust.	Par. 94		Par. 339
8	Bell pull bar.	Bar worn, or out of adjustment.	Replace, adjust.	Par. 94	Par. 159	Par. 337

Note. See figures 312 to 316 inclusive for wiring diagrams of the typing reperforators.

Trouble-analysis chart N. Typing reperforator operates but tape-out alarm bell fails to operate

Item No.	Items to be inspected or checked	Possible trouble	Corrective action	Reference data		
				Detailed function	Repairs	Adjustments
1	Bell-hammer spring.	Missing or broken.	Replace.	Par. 95	Par. 154	Par. 176
2	Locking pawl.	Adjustment.	Adjust.	Par. 95		Par. 180
3	Locking-pawl spring.	Missing or broken.	Replace.	Par. 95		Par. 181
4	Bell-hammer extension.	Binding or broken.	Adjust or replace.	Par. 95		Par. 178
5	Tape-out lever.	Bent or broken.	Adjust or replace.	Par. 95		Pars. 174, 180

Note. See figures 312 to 316 inclusive for wiring diagrams of the typing reperforators.

Trouble-analysis chart O. Typing reperforator perforates but fails to print properly

Item No.	Items to be inspected or checked	Possible trouble	Corrective action	Reference data		
				Detailed function	Repairs	Adjustments
1	Type bars.	Worn or missing type pallets.	Replace type pallets.	Par. 86	Pars. 160, 161	
2	Pull bars.	Incorrect spring tension, worn or broken teeth at bottom of bar.	Replace or adjust.	Par. 86	Par. 160	Pars. 261-265, 282, 283, 314
3	Code bars.	Binding or improper adjustment.	Adjust.	Par. 87	Par. 160	Pars. 265, 291, 292
4	Transmitter contacts.	Incorrect contact gap.	Adjust.	Pars. 17, 71	Pars. 113, 118, 158	Par. 187
5	Selector bars.	Incorrect spacing.	Remove shims from under selector bar brackets.	Par. 73		
6	Selector magnet armature.	Loose.	Adjust pivot screws.	Par. 81	Par. 160	Pars. 230, 243
7	Pull bars and code bars.	Incorrect clearance.	Adjust.	Pars. 86, 87	Par. 160	Par. 265
8	Selector mechanism.	See chart D, items 2, 3, and 4.		Pars. 81, 82	Par. 160	Pars. 228-235, 240-244
9	Platen mechanism.	See chart K, items 1 through 10.		Par. 93		Pars. 301-305, 310-312

Note. See figures 312 to 316 inclusive for wiring diagrams of the typing reperforators.

113. Localization of Electrical Troubles

a. GENERAL. Electrical circuits in the typing reperforator are provided with connecting terminals at points where it will be necessary to connect or disconnect circuits or units. Do not disturb the wiring any more than necessary in testing and inspection. The majority of electrical troubles will be found at contacts, or where the insulation on wire, or between metal parts has been damaged. The repairman must be familiar with the use of schematic and wiring diagrams and must use them while making point-to-point checks of the teletypewriter circuits until the fault is located. Schematic wiring diagrams of external equipment to which the teletypewriter is connected will furnish information which will be of great assistance to the repairman in setting up circuits for testing and localizing the teletypewriter trouble. Detailed procedures for localizing electrical troubles are furnished in paragraph 114 for the power circuit and in paragraphs 116 through 119 for the signal circuits.

b. TESTING PROCEDURE. The actual procedure for locating electrical troubles will vary, depending on whether the work is being done by lower echelons using Test Unit I–236 or by higher echelons where more accurate testing equipment may be available. The basic principles remain the same for any given trouble but certain troubles such as part of a resistor shorted-out or small variations in voltage cannot be accurately tested with Test Unit I–236.

All of the more common troubles can be located with this test unit, and the information in paragraph 115, and following paragraphs is arranged to start with the use of Test Unit I–236, and then give additional information for use by higher echelons involved in major overhaul of the equipment. When available, a milliammeter or a voltohmmeter may be used to indicate the location of electrical trouble.

c. TESTING CAPACITORS. Three possible trouble conditions that may occur in capacitors in the power and signal circuits are opens, shorts, and leakage (leakage is flow of current through a partially shorted-capacitor). Detailed instructions for the use of Test Unit I–236 for testing capacitors are furnished in TM 11–2056. Two alternate testing methods are the spark test described in (1), (2), and (3) below and the ohmmeter method described in (4) below.

Caution: Take extreme care to avoid personal injury from shock when handling charged capacitors or leads connected to power supplies that are in operation.

(1) When Test Unit I–236 is not available, capacitors may be tested by the *spark test.* In the spark test the capacitor is charged and then discharged by shorting the capacitor terminals with a screw driver and observing any spark that occurs or by connecting the terminals of the capacitor to a telephone headset or test receiver and listening for any click that occurs. Instructions for making the spark test are given in (2) and (3) below:

(2) For capacitors with a value of 0.1 mf or greater, disconnect the capacitor leads from the equipment and connect to a d-c power source of 90 volts or higher by means of suitable insulated test leads. After the capacitor has been connected to the d-c power source for a few moments, remove one of the test clips from the power supply; ALSO REMOVE THE OTHER END OF THE SAME TEST LEAD FROM THE CAPACITOR *before* turning off the power supply to prevent shorting the capacitor by accidentally shorting the leads. After giving the capacitor a charge, wait for 1 to 1½ minutes and then short-circuit the capacitor terminals with a screw driver. A spark should be seen if the capacitor is in good condition. If the capacitor is open, or partially or completely shorted, no spark will be seen.

(3) For capacitors with a value less than 0.1 mf, disconnect the capacitor leads from the equipment and charge as in (2) above. Wait 30 to 40 seconds after disconnecting the capacitor from the charging power supply and then connect the tips of a telephone headset or a test receiver across the terminals of the capacitor. A click should be heard in the test receiver as the test leads are placed on the capacitor terminals if the capacitor is in good condition. If the capacitor is open, or partially or completely shorted, no click will be heard. Be careful not to touch the bare metal on the tips of the headset cord when making this test.

(4) The *ohmmeter method* generally may be used to test capacitors having a value of 0.01 mf or more. When a good capacitor of sufficient size is connected to an ohmmeter, the needle will kick up-scale and then show open circuit. If the needle does not kick, the capacitor is open. A shorted capacitor gives a steady meter reading somewhere between zero and infinity, depending upon the resistance of the short.

d. TESTING RESISTORS AND CHECKING CIRCUIT CONTINUITY. Resistors may be tested and circuit continuity may be checked with Test Unit I–236 (par. 109*e*) or with an ohmmeter. Before measuring resistance or making continuity tests with any instrument that furnishes its own testing battery, completely disconnect the typing reperforator from external power and signal circuits, since false measurements may result and there is danger of damaging the measuring instrument. In most cases, resistances may be measured and circuit continuity checked without disconnecting any of the circuit elements. However, parts or circuits that are connected in parallel must be isolated before accurate tests or checks may be made. Connect individual circuits to the proper power supply for making point-to-point voltage checks and current-flow tests. DO NOT ATTEMPT TO MEASURE RESISTANCE WITH AN OHMMETER WHILE CURRENT FROM THE POWER SUPPLY IS FLOWING IN THE CIRCUITS.

e. CIRCUIT FOR TESTING. Localizing electrical troubles in the signal circuit requires some means of providing a normal 60-milliampere current in the closed circuit. A test made using this arrangement is called operating in a *local* or *dummy circuit,* thus distinguishing it from

a regular connection to a second typing reperforator. Inspections made after a major overhaul may be completed in a local circuit by using either a second typing reperforator as a standard for comparison, or by using special test equipment as described in section XIV.

114. Use of Test Unit I-236 for Localizing Electrical Trouble

a. GENERAL. Test Unit I–236 furnished as part of Tool Equipment TE–50 is described in detail in TM 11–2056. Its uses in locating electrical troubles in the signal and power circuits are described in this paragraph as compared with the voltmeters and ohmmeters which will be used by higher echelons. Test Unit I–236 is particularly designed as a lightweight durable test set for use by lower echelons. It is used to test continuity and voltages in place of the separate more delicately-constructed instruments normally used in higher echelons for major overhauls of teletypewriter equipment. To avoid duplicating information, the detailed discussions on localizing various electrical troubles are written to describe the use of the different test sets while *b* and *c* below explain how Test Unit I–236 is used by lower echelons in localizing electrical trouble.

b. VOLTAGE CHECKING. In localizing power troubles (par. 115), Test Unit I–236 is used in place of the a-c voltmeter in making line voltage checks of the various parts of the power circuit. The test leads of Test Unit I–236 should be placed on the same terminals as required in checking with a voltmeter. The switches on Test Unit I–236 should be as follows: SW1 should be in the INT. V. position, and SW2 should be in the NEON & MAZDA position. For tests that indicate no voltage or low voltage, neither light will light. Voltages less than normal line voltage can be compared by observing the change in brightness of the Mazda light on the line voltage and then on the voltage being tested.

c. CHECKING CONTINUITY. The continuity tests used in localizing electrical trouble in the signal circuits (par. 116) can be made with Test Unit I–236 in place of the ohmmeter as follows: Place SW1 on EXT. V., and SW2 on NEON, and place the power plug of Test Unit I–236 in a 115-volt, a-c or d-c power source. Place the test leads on the same terminals as required in the ohmmeter tests. Open circuits are indicated by the neon light not lighting. Shorts or high resistance between the leads are indicated by the neon light lighting. If the voltage is 115 volts dc and SW2 is placed on NEON & MAZDA, resistances of greater than 200 ohms will cause the neon bulb not to light.

115. Localization of Electrical Power Trouble

Power troubles may show up in various ways. If the typing reperforator motor does not run or cannot be brought up to proper speed, the trouble may be either external or within the reperforator. The following step-by-step procedure is used to locate the trouble.

a. TESTING LINE VOLTAGE. Using Test Unit I–236 or an a-c voltmeter if the power supply is ac, or a d-c voltmeter if the power is dc, check the line voltage at the power outlet. If the line voltage is between 110 and 125 volts, with the typing reperforator connected and the motor switch on, check for trouble within the typing reperforator.

b. TESTING GOVERNOR CONTACTS. (1) If the motor runs but is not up to proper speed, check the governor contacts. The contacts may be open, dirty, burned away, or may have incorrect contact spring tension.

(2) If there is a voltage between terminal Nos. 13 and 15 and the motor does not start, check for the following:

(*a*) Broken or bent brush springs.

(*b*) Dirty or worn contacts on the brush springs.

(*c*) Dirty contact surfaces on the inner and outer contact disks.

(*d*) Broken or bent contact spring.

(*e*) Improper contact surfaces between contact springs and the governor spring brackets.

(*f*) Burned out, worn, or dirty governor contacts.

(*g*) Bent or broken contact arm. If contact arm is not broken, check for proper contact arm spring tension.

c. CHECKING MOTOR BRUSHES. If a governed series motor does not run, check the motor brushes to see that they are properly seated and that proper connections are made to the brushes.

d. TESTING FOR VOLTAGE AT MOTOR TERMINALS. If motor does not run and trouble is not in governor, proceed as follows:

(1) Check motor brushes.

(2) Insert power cord in outlet.

(3) Remove typing reperforator unit from its base.

(4) Turn power switch in base to ON.

(5) Test voltage across the terminal Nos. 13 and 15. There should be no change in the voltage measured at the power outlet (see *a* above) and the voltage measured between terminal Nos. 13 and 15. Correct voltage measured up to this point indicates that the trouble is not in the power wiring and localizes the trouble to the reperforator unit.

e. TESTING FOR OPENS IN WIRING WITHIN BASE UNIT. If no voltage can be measured between terminal Nos. 13 and 15 of the base unit, the trouble can be localized by placing one voltmeter lead on terminal No. 21 and the other lead on each of the following terminals in turn: terminal Nos. 22, 13, and 23. Faults occur between the terminal where there is the first indication of voltage, and the preceding terminal. It is necessary to follow the appropriate wiring diagram closely when locating trouble in the above manner.

f. LOCATION OF CROSSES. Crosses between the motor circuit and either send or receive circuits, or both, may be the result of damaged insulation on adjacent leads and the bare copper wire making contact, or the terminals of a part in one circuit making contact with the terminals of a part or a lead with damaged insulation in the other circuits. Test for crosses as follows:

(1) Disconnect the typing reperforator from all external power and signal circuits.

(2) Connect one lead of Test Unit I–236 or an ohmmeter to one terminal of the power plug.

(3) Touch the other lead of Test Unit I–236 (or ohmmeter, whichever is used) to the tip and sleeve of the send (black) plug and the tip and sleeve of the receive (red) plug.

(4) Connect the lead of Test Unit I–236 to the other terminal of the power plug and repeat the process.

(*a*) Any indication of a closed circuit signifies a cross.

(*b*) The position of the test leads that gives the greatest indication usually shows which sides of the circuit are crossed.

(5) Check these portions of the circuits carefully to locate the exact point of the cross.

g. LOCATION OF GROUNDS. Grounds in the motor circuit may be the result of insulation being worn off leads and the bare copper wire making contact with the frame of the equipment, defective capacitors, and terminals of capacitors, resistors, or other parts touching the frame of the equipment. Test for grounds as follows:

(1) Disconnect the typing reperforator from all external power and signal circuits.

(2) Connect one lead of Test Unit I–236 or an ohmmeter to the frame of the equipment.

(3) Touch the other lead to the terminals of the power plug.

(*a*) Any continuous indication signifies a ground on the motor circuit. (Disregard the few minor flashes of the neon lamp on Test Unit I–236 or the slight kick of the needle on the ohmmeter when the test leads are first connected to the equipment, since this is due to initial charging of capacitors in the circuit.)

(*b*) The terminal that gives the greatest indication usually shows which side of the power circuit is grounded.

(4) Refer to paragraph 114 and following paragraphs for instruction on the use of Test Unit I–236. Refer to TM 11–2056 for detailed instructions on methods of testing capacitors, resistors, and circuit continuity.

116. Isolation of Trouble in Send or Receive Circuits

a. GENERAL. The actual connections used to arrange the send and receive circuits for testing will vary depending upon the equipment with which the typing reperforator is being operated. When no associated or test equipment is available to provide a 60-milliampere test circuit, a dummy circuit may be set up as described in *b* to *e* below.

b. USE OF BATTERY, RESISTOR, AND MILLIAMMETER TO SET UP A TEST CIRCUIT. Because of the resistance of the wiring and the selector magnets, a battery supply of at least 12 volts must be used. It is preferable to use a higher voltage and external protective resistance so that shorting out any part of the signal circuit will not cause excessive current to damage the milliammeter. The test circuit must consist

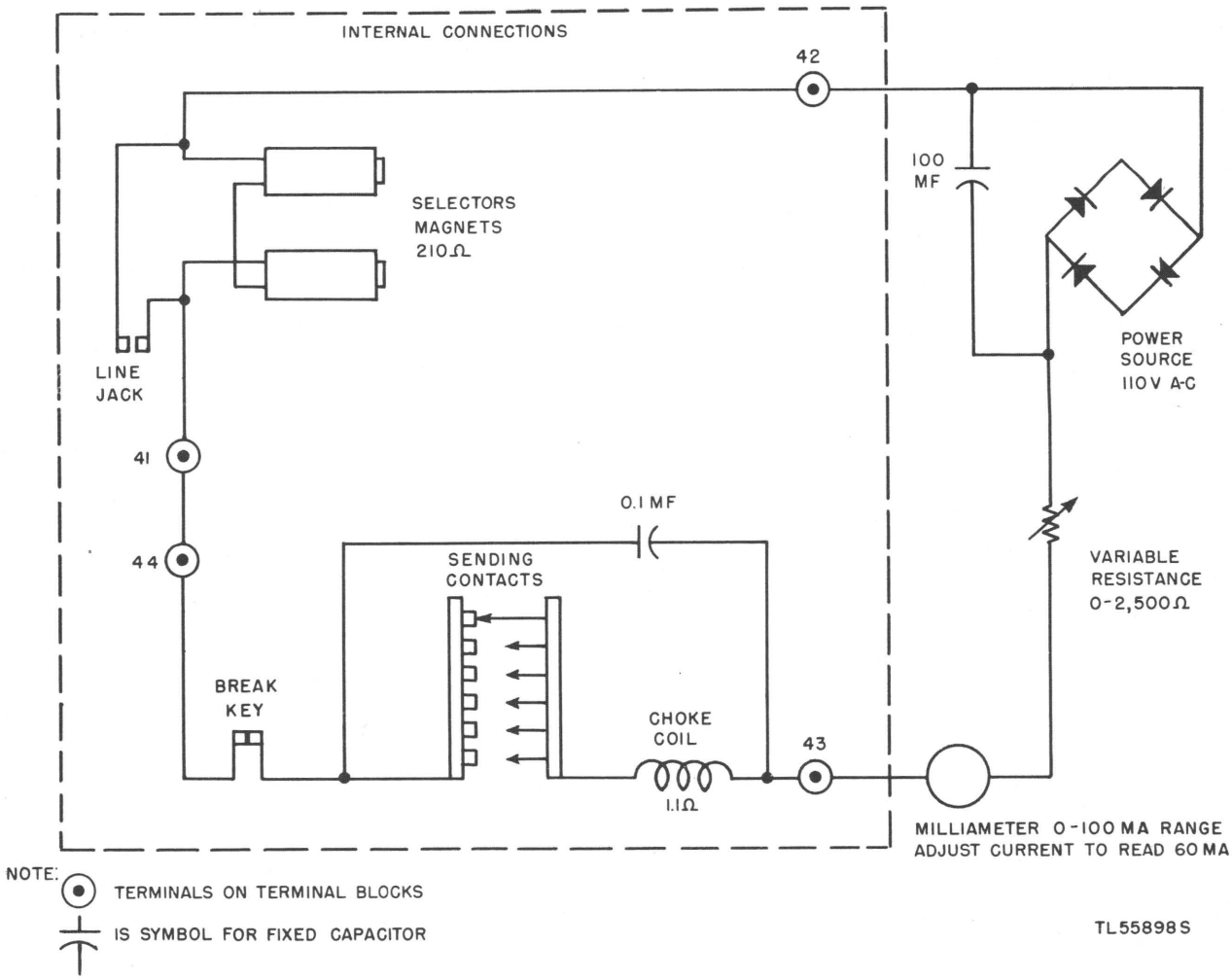

Figure 93. Dummy test circuit.

of the following circuit elements connected in series: the send and receive circuits, a d-c power source not to exceed 125 volts, a milliammeter, and a variable resistor whose resistance is sufficient to limit the current to 60 milliamperes (ma).

Caution: When shorting any part of the series circuit, make sure that sufficient resistance is left in the circuit to avoid damaging the milliammeter. For example, using 110-volt power source, there must always be 1,833 ohms in the series circuit to limit the current to 60 ma, or there must be 16 2/3 ohms for every volt of power source voltage.

c. SETTING UP DUMMY TEST CIRCUIT. Figure 93 shows a dummy test circuit which may be used to localize electrical trouble when other teletypewriter testing equipment is not available.

d. SETTING UP TEST CIRCUIT WITH SWITCHBOARD BD–100. Following is one of the methods which can be used in connecting Switchboard BD–100 as a dummy circuit. The send and receive plugs are not inserted directly into the OPERATOR'S PRINTER jacks because the internal circuits of Switchboard BD–100 do not provide the series circuit furnishing 60 milliamperes required for the test. Instead, the send and receive plugs of the teletypewriter are wired in series and connected to a pair of line terminals. This setup permits the line current in the series circuit to be adjusted to 60 milliamperes as indicated by the meter on Switchboard BD–100.

(1) Fasten the shells of the teletypewriter send and receive plugs together with friction tape so that the tip and sleeve of each plug is exposed but held apart.

(2) Short the sleeves of both plugs together by wrapping 3 or 4 turns of cleaned bare copper wire around both plug sleeves. Twist the ends tight to hold the wire in place.

(3) Connect the plug tips to a vacant pair of line terminals of Switchboard BD–100 by a piece of two-conductor insulated wire having test clips on one end. Snap one test clip on the tip of the red cord and the other clip on the tip of the black cord. Be sure the clips do not short the tip and sleeve of the plugs.

(4) Turn the line rheostat of the corresponding line to the IN postion.

(5) Place the line current supply switch to LINE CURRENT SUPPLIED BY SWITCHBOARD position.

(6) Place the meter key to LINE CURRENT.

(7) Adjust the line current to 60 ma by adjusting the corresponding line rheostat.

117. Circuit Continuity Tests

a. When the test circuit is connected, current should flow through the entire circuit, indicating that the send and receive circuits of the typing reperforator are closed. If no current flows, then an open must be present in either the send or receive circuit. To test the continuity of the receive circuit, short the send plug, and to test the send circuit, short the receive plug. (See par. 116.) Refer to paragraphs 118 and 119 for information on locating opens in the send and receive circuits.

b. When the circuit is closed, send RY's and test sentences with the keyboard to check the over-all operation of the typing reperforator as a complete unit. If the typing reperforator operates without error, it is trouble-free. If the send circuit is shorted internally, the typing reperforator will run closed but will not transmit. If the receive circuit is shorted, the typing reperforator will run open. Results of these tests will definitely indicate whether the trouble is in the send or receive circuit.

118. Localization of Trouble in the Send Circuit

a. GENERAL. Trouble within the send circuit can be localized by the use of Test Unit I–236, ohmmeter, or a voltmeter and battery in series. The send circuit consists of the black send plug and cord, break contacts, and sending contacts in series.

b. LOCATION OF OPENS. With the typing reperforator unit removed, attach test leads to the black send plug and short various parts of the send circuit in which the open might occur. When shorting some part of the circuit results in a low-resistance indication in the test set, the open is within the part of the circuit shorted. Following are tests which will localize trouble to the most probable causes.

(1) *Plug or cord circuits.* Short terminals 43 and 44. If test set does not indicate a short, the plug or cord circuit is open.

(2) *Keyboard.* Remove typing reperforator unit, short the sending contacts and the choke coil. The part of the circuit that was effectively removed by the short, which makes the rest of the circuit continuous when shorted, is open.

(3) *Break key.* Short the break key. If the resistance reading is unaffected, the break key is operating properly.

(4) *Base wiring.* If the above tests fail to locate the trouble, place one end of the shorting wire on the sleeve of the black plug and the other end on the following terminals in turn: terminal 44, keyboard contacts, break contacts, terminal 44, and the tip of the plug. The trouble will be found between the point where the test set indicates a short and the point where the test set indicates open.

c. LOCATION OF SHORTS. (1) *General.* Short circuit may be located in a manner similar to that used for locating open circuits, as described in *b* above, except that the circuit is opened at the various points of test. The test set is connected across the tip and sleeve of the send plug for all tests. The short will be found between the point in the circuit which, when clear, opens the send circuit, and the next point where breaking the circuit does not open the send circuit.

(2) *Keyboard base wiring.* To determine whether or not the trouble is in the base wiring, remove the typing reperforator unit. If this action removes the short, the trouble is not in the base wiring. If the short persists, make a point-to-point check by opening the circuit at the following points in turn: terminal 44 keyboard break contacts, terminal 44, and

send plug. The short can be found by following the procedure given in *c* (1) above.

d. LOCATION OF CROSSES. Refer to paragraph 115*f* for the discussion of crosses between the motor, send, and receive circuits.

e. LOCATION OF GROUNDS. Grounds in the send circuits may be the result of the same conditions described under the discussion of the motor circuit in paragraph 115*g*. Except for the following change, perform the same test to locate grounds in the send circuit: touch the lead of Test Unit I–236 (or the ohmmeter, whichever is used) to the tip and sleeve of the send plug instead of to the terminals of the power plug. All other conditions discussed in paragraph 115*g* apply to the send circuit.

119. Localization of Trouble in the Receive Circuit

a. GENERAL. Trouble within the receive circuit can be localized by the use of Test Unit I–236 or an ohmmeter. The receive circuit consists of the red receive plug and cord, the selector magnets, and wiring, connected in parallel.

b. LOCATION OF OPENS. With Test Unit I–236 or an ohmmeter, test for continuity of the receive circuit. Connect the test equipment to the tip and sleeve of the red (receive) plug. If there is an indication of an open, make the following tests.

(1) *Typing reperforator unit.* Remove the typing reperforator unit and with Test Unit I–236 or an ohmmeter check the resistance between contacts 11 and 12 of the typing reperforator unit. Testing across the coils of a pulling magnet selector in series, the resistance should be about 210 ohms; in checking the coils of a holding magnet selector, the resistance should be about 184 ohms. The resistance of each coil when tested alone should be about 105 or 92 ohms respectively. Test Unit I–236 will not measure resistance but it will indicate whether the resistances of the two coils are approximately equal. If the magnet circuit is clear, the open is in the base wiring.

(2) *Base wiring.* If the above tests fail to locate the open, then the open is in the receive cord or in the base wiring. The following tests will locate the open quickly and accurately. Connect the leads of Test Unit I–236 or an ohmmeter to the tip and sleeve of the red (receive) plug. Connect a 4-foot length of insulated wire to the sleeve of the red plug, and with the other end of the wire short out various parts of the receive circuit by touching in successive order the following terminals and contacts: terminal Nos. 41, 46 (on FB43 base only) 11, 12, 45, $\overline{42}$, and the red plug tip. The open will be between the first contact which shorts the receive plug when touched, and the preceding contact.

c. LOCATION OF SHORTS. Shorts in the receive circuit will prevent the full line current from reaching the selector magnets. Shorts may occur between two wires or between wires and metal parts. A short in the wiring will be indicated on the test set. Inspect the teletypewriter for shorts in the following sequence:

(1) *Base wiring.* Remove the typing reperforator unit and open the selector shorting jack. The contacts on the line shorting jacks on all bases should be insulated for these tests. Place a small insulated strip between the contacts sufficiently thick to hold the contacts apart. On the high (receiving-only) base the line and selector shorting jack, mounted on the relay base plunger, should be depressed. Measure the resistance between the tip and sleeve of the red receive plug. If the meter indicates a short within the wiring, open the wiring at each of the following terminals in turn: terminal Nos. 41, 46 (on FB43 base only) 11, 12, 45, 42, and the plug terminals. Measure the resistance at the tip and sleeve of the red plug. The short is between the first terminal opened which doesn't remove the short indication of the meter, and the preceding terminal tested. Refer to the appropriate schematic diagram for the typing reperforator being tested when tracing shorts.

(2) *Typing reperforator unit.* Remove the typing reperforator unit and test the resistance between contacts 11 and 12. The resistance for pulling magnet selectors connected in series should be about 210 ohms, and about 184 ohms for holding magnet selectors. A low-resistance reading indicates a short. Remove one of the leads at either of the selector magnets and measure the resistance of the two magnets in series. If the resistance is about 210 or 184 ohms, as mentioned above, the short is not in the selector magnets but in wiring between the magnets and contacts 11 and 12 of the typing

reperforator unit. Check the resistance between contact 11 (or 12) and the frame of the typing reperforator unit. The wiring is grounded if a short is indicated on the test set.

d. LOCATION OF CROSSES. Refer to paragraph 115*f* for the discussion of crosses between the motor, send, and receive circuits.

e. LOCATION OF GROUNDS. Grounds in the receive circuit may be the result of the same conditions described under the discussion of the motor circuit in paragraph 115*g*. Except for the following change, perform the same test to locate grounds in the receive circuit: touch the lead of Test Unit I–236 (or the ohmmeter, whichever is used) to the tip and sleeve of the receive (red) plug instead of to the terminals of the power plug. All other conditions discussed in paragraph 114 apply to the receive circuit.

120. Introduction to Localization of Mechanical Troubles

a. When a mechanical function either fails to operate or operates in a faulty manner, the trouble must be localized or isolated in a particular adjustment or series of adjustments. The experience of the repairman and the overall condition of the equipment will indicate which of the following two methods is the better approach to various troubles.

(1) One method involves checking the individual requirement for *all* adjustments in the subassembly or mechanism. Use the related data found in the detailed requirements and adjustment procedures, section XV, to determine the sequence to be followed.

(2) A second method involves setting up by hand the selecting mechanism and completing the operation by manually rotating the motor, shaft, gear, or cam that normally drives the assembly. This method is usually quicker when only one adjustment is faulty and the remainder of the mechanism is in good condition. In such cases only the related adjustments need to be checked.

Caution: *In same cases evidences of faulty operation may be apparent only when the mechanism is power-driven.*

b. Additional aid in locating mechanical troubles may be secured from records of previous troubles and adjustments.

c. The procedure for localizing mechanical trouble is divided into the effects of the trouble as follows:

(1) Typing reperforator does not start.

(2) Typing reperforator unit runs open.

(3) Sending cam sleeve turns continually.

(4) Typing reperforator scrambles letters and functions.

121. Locating Trouble When Typing Reperforator Does Not Start

The following conditions should locate trouble if the typing reperforator will not start.

a. ELECTRICAL TROUBLE. See paragraph 115 for electrical power troubles. Electrical trouble in the motor circuit may be due to mechancial adjustments of contacts, and tests for electrical trouble will accurately locate these troubles.

b. EXCESSIVE MOTOR OR MAIN-SHAFT TORQUE. With the teletypewriter cover removed, turn the motor by hand in the direction of normal operation. If the motor cannot be easily turned by hand, make the following tests to locate the cause of the binding.

c. BINDING AT MAIN-SHAFT DRIVE GEAR. The reperforator unit should remain on its base while making this test. Turn the motor by hand for one complete revolution to check the backlash between the pinion and gear. If there is indication of bind, reposition the motor to obtain the allowable tolerance.

d. TRANSMITTER SHAFT BINDS. (1) Check gear clearance of transmitter-shaft drive gear when typing reperforator unit is fastened to the base unit.

(2) Check binding of the transmitter-shaft bearings.

122. Locating Trouble When Typing Reperforator Unit Runs Open

Examine for the following situations if the typing unit runs open:

a. ELECTRICAL TROUBLE. With the teletypewriter cover removed, press the selector armature to the mark position. If the armature does not bind and the teletypewriter runs closed, the trouble is electrical. If the teletypewriter does not run closed with the armature in the mark position, the trouble is mechanical and within the typing unit.

807975 O - 48 - 9

b. SELECTOR TRIP-OFF MECHANISM. (1) Examine the selector sleeve when the selector armature is in the mark position. If the selector sleeve rotates under these conditions, the trouble is in the selector trip-off mechanism.

(2) Loosen the trip-off eccentric screw and turn the screw until the screw-head does not touch the trip-latch plunger. If the selector-cam sleeve does not stop rotating, the trouble may be in the stop lever. Turn the main shaft by hand while holding the stop lever from rotating. If the selector-cam sleeve is stopped after one revolution, the trouble may be in the trip-latch or in the trip-latch spring, or in a worm-stop lever.

c. MAIN-SHAFT CLUTCH THROW-OUT LEVER. If the selector sleeve does not rotate when the selector armature is in the mark position, but the bail cam continues to rotate, the trouble is in the clutch throw-out lever.

(1) With the selector armature held in the mark position, rotate the main shaft slowly and examine the clutch throw-out lever.

(2) If the clutch throw-out lever does not engage the sixth cam, check for a missing spring, a broken or missing stop arm or cam arm.

(3) If the clutch throw-out lever does engage the cam, check the clearance between the clutch jaws.

123. Locating Trouble When Sending Cam Sleeve Turns Continually

If the transmitter runs open make the following checks on the transmitter clutch throw-out lever.

a. See if the clutch throw-out lever engages the throw-out cam. The clutch throw-out lever spring may be missing or the clutch throw-out lever may be binding.

b. Adjustment of the clutch throw-out lever eccentric.

c. Adjustment of space-repeat rod.

124. Typing Reperforator Scrambles Letters and Functions

If the typing reperforator prints but scrambles letters and functions, the source of trouble may be either external to the reperforator or within a subassembly of the reperforator.

a. If the trouble is believed to be external, check the items listed in (1) through (3) below.

(1) Characteristics of the signal line.

(2) Line current, should be 60 milliamperes for ideal operation.

(3) External relays which may cause a biased signal to be received by the selector mechanism even wnen the signal is sent by the keyboard on the same typing reperforator.

(4) To test the operation of the typing reperforator without the use of the external line, set up a dummy circuit as explained in paragraph 116.

b. If the trouble is not external to the typing reperforator, check the items listed below:

(1) Range-finder assembly for proper range setting.

(2) Keyboard sending contacts which should be clean and properly adjusted.

(3) Motor speed.

(4) Platen spring if the shift function does not work properly. Also check the rubber platen disk to see if it is worn.

(5) Platen shift rocker for proper adjustment.

(6) Code bar bell cranks and vertical levers for proper lubrication and operation. If there is evidence of binding readjust in accordance with instructions given in section XV.

125. Testing the Typing Reperforator with a Test Circuit

Adaptations of test circuits will vary with the experience of repair personnel. The sequence of testing given below is recommended for general use of all personnel involved in the repair of typing reperforators.

a. Set up a circuit as explained in paragraph 116.

b. Type (or receive) test sentences to see if errors occur.

c. With the cover removed, check the code position of the code bars for each letter or operation. See figure 21 for the teletypewriter code. The code bars move to the right when a marking impulse is received. The platen should move forward or backward to correspond with the desired function.

d. Use the RY combination to get complete reversal of the selecting parts (code bars, vertical levers, etc.). Any part that is sticking can be readily detected.

e. With the motor switch turned to OFF, operate the R and Y keys and slowly turn the motor in its normal direction of operation. Watch the marking and spacing operation of the selector unit and the selector armature. Poor sending contacts or improper contact adjustment may cause one or more of the sending contacts to transmit space instead of mark impulses.

f. If no results are obtained from the test described in *a* through *e* above, the trouble is probably in the adjustment of the selector unit. After checking the tension of the armature spring (on pulling magnet selector only), make a complete adjustment of the selector unit according to the requirements given in section XV. Trouble in the selector unit will be evident only if the typing reperforator is power-driven.

Section XIV. REPAIRS AND REPLACEMENTS

126. General Repair Information

a. This section describes the repairing and replacing of defective typing reperforator parts and does not duplicate information on preventive maintenance procedure furnished in part three. The repair instructions furnished are not intended as a complete shop guide listing every possible work operation that might be involved in large-scale dismantling and repairing of salvaged typing reperforators. The procedures included are intended to prescribe the operations involved in replacing and repairing those parts, assemblies, and units subject to the greatest amount of wear.

b. Because of variations in service needs and in repair and supply facilities available, definite rules cannot always be given specifying exactly which parts, assemblies, or units should be repaired and which should be replaced. As only a limited number of the many small typing reperforator parts can be satisfactorily repaired, the repair instructions consist primarily of detailed disassembly, cleaning, replacement, reassembly, adjustment, and lubrication procedures to be followed in overhauling a complete typing reperforator or repairing a single unit or assembly. Actual repair instructions are included for those parts and assemblies which can be satisfactorily repaired under average conditions.

c. Except in cases of extreme emergency, all repairs to typing reperforators should be completed by personnel thoroughly trained in teletypwriter maintenance. Knowing what NOT to do is as important as knowing what to do when making teletypewriter repairs. Equipment operating with minor faults may fail completely as a result of efforts by inexperienced personnel to correct apparently simple defects.

d. Inspecting, cleaning, and lubricating completed while making repairs should be performed in accordance with preventive maintenance procedures described in part three and additional instructions in this part. All adjustments should be completed in accordance with the detailed requirements and adjustments in section XV. Refer to section VIII for moisture-proofing and fungiproofing instructions.

e. General instructions grouped in the paragraphs at the front of this section are intended for use when a complete unit is removed and another (new or repaired) unit is installed. The general instructions do not include disassembly, cleaning, repair, replacement, and reassembly information which applies only to the repairing and replacing of individual parts.

127. Indexing of Repair and Replacement Procedures

Refer to the general index for the location of paragraphs in this section giving detailed repair and replacement instructions for individual parts and subassemblies. The paragraphs are arranged to group the related topics for each of the principal assemblies.

128. Operation of Equipment During Overhaul

During the course of overhauling or making major repairs, model 14 typing reperforators must be operated under power for purposes of

observing over-all operation or checking the requirements of certain parts. If the associated equipment is available for testing purposes, no special testing circuits are necessary. Refer to the TM's on the complete sets for information on equipment, connections, and operation. If the associated equipment is not available for testing purposes (operating with a replacement typing reperforator, or for other reasons), provide temporary power and signal circuits for workbench operation. These circuits for workbench operation are discussed in paragraphs 129 and 130 following.

129. Temporary Power Supply for Workbench Testing

a. GENERAL. A power supply, suitable for testing purposes, should be available for operating the model 14 typing reperforators when they are removed from their associated equipment. Equipment having governed series motors, requires 115-volt dc or 115-volt, 25- to 60-cycle ac. Equipment having synchronous motors requires a source of regulated power, usually 60-cycle ac. *Check the equipment nameplate to be certain which type of power is required.* Make connections between the equipment on the workbench (table, box, shelf, or other support for equipment and tools) and the proper power supply with insulated leads terminated with test clips. Other strapping necessary for testing the equipment on the workbench may be made with any suitable wire available.

b. TYPING REPERFORATORS (FPR17) USED AS A PART OF REPERFORATOR TRANSMITTERS TG–26–A AND TG–27–A. For workbench operation of model 14 (FPR17) typing reperforators used as part of Reperforator Transmitters TG–26–A and TG–27–A, connect the test clips on one end of the power leads to the connection-block terminals. Connect the other end of the power leads to the proper power supply through a series resistor. Figure 94 shows the proper connections and the strapping necessary for operation on several different power supplies.

c. TYPING REPERFORARORS (FPR5, 21, AND 23) USED AS PART OF FIXED PLANT EQUIPMENT. For workbench operation of model 14 (FPR5, 21, and 23) typing reperforators used as part of fixed plant equipment, connect the test clips on one end of the power leads to slip-connection

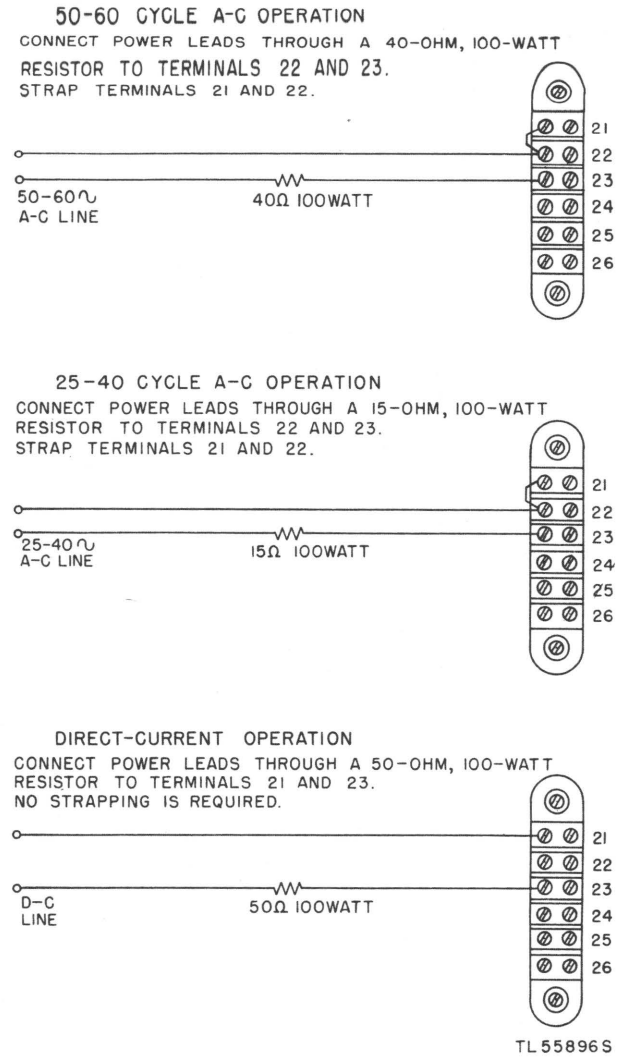

Figure 94. Connections and strapping for workbench operation of model 14 (FPR17) typing reperforators used as part of Reperforator Transmitters TG-26-A and TG-27-A.

terminals as shown in figure 95. Connect the other end of the leads to the proper power supply. Figure 95 shows the proper connections and the strapping necessary for operation on the normal power supplies.

130. Signal-Circuit Connections During Repairs

The signal circuits discussed in this paragraph may be used to check the operation requirements of the typing reperforator during repairs. If no extra equipment is available to complete the necessary connections, refer to paragraph 116 for instructions on using a

dummy test circuit. Normally the signal circuit of model 14 typing reperforators is wired for neutral operation. However, the equipment may be used for polar operation by making a few minor changes in the wiring. Refer to the appropriate wiring diagrams included as figures 312 through 316. Instructions for setting up a signal circuit for neutral operation follow:

a. TYPING REPERFORATOR (FPR17) USED AS PART OF REPERFORATOR TRANSMITTERS TG–26–A AND TG–27–A. Connect the signal line with the red shell plug to connection-block terminals Nos. 41 and 42 and the signal line with the black shell plug to terminals Nos. 43 and 44 for workbench operation. Connect the other ends of the signal lines to a unit of sending and receiving teletypewriter equipment *known to be in proper adjustment.* The line current (power) must be furnished from some source external to the typing reperforator.

b. TYPING REPERFORATORS (FPR5, 21 AND 23) USED AS PART OF FIXED PLANT EQUIPMENT. Connect the cord with the red shell plug (receiving line) to terminal Nos. 11 and 12 (on FPR5) or Nos. 41 and 42 (FPR21 and FPR23) for connections during repairs. Terminate the other end of the receiving line to sending teletypewriter equipment *known to be in proper adjustment.* Connect the unit to an external source to provide the proper line current of 60 milliamperes.

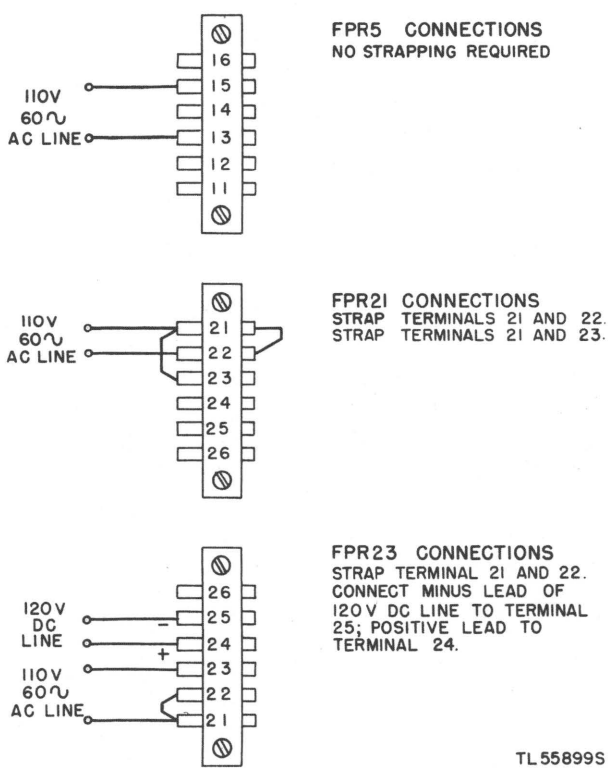

Figure 95. Connections and strapping for workbench operation of model 14 (FPR5, 21 and 23) typing reperforators used as part of fixed plant equipment.

131. Ground Connection for Testing During Repairs

A ground connection is not required to complete the signal circuit. However, a ground wire attached to the frame reduces the danger of electric shock resulting from faulty insulation of leads, windings, etc., from bare wire making contact with the metal frame, and from feed-through from filter capacitors. Use a spring-type test clip on the ground wire to permit connection and disconnection.

132. Instructions for Removing Principal Typing Reperforator Units

a. COVER. Lift the cover straight up. (See fig. 1.)

b. TYPING REPERFORATOR UNIT. Remove two knurled thumbscrews that fasten the typing reperforator unit to the base. Remove the typing reperforator unit by lifting the unit with a slight twist to the left until it clears the base.

c. MOTOR UNIT. Remove three mounting screws that fasten the motor to the base. (See fig. 45.) Remove the two screws holding the motor leads terminal block and slip the block through the reperforator unit. Do not unsolder the leads unless it is necessary.

133. General Disassembly Procedure

a. PREPARATION FOR DISASSEMBLY. Before starting to disassemble the typing reperforator, take the following preparatory steps.

(1) Arrange a clean place to work on a bench, table, or box. Make sure that dust or dirt will not fall or be blown into the mechanism while it is disassembled. When rough boards or other rough surfaces are used as a workbench, place several thicknesses of paper or some kind of cloth material on the boards to prevent small parts from becoming lost or dirty.

(2) Secure several small, clean cardboard, wool, or metal containers to keep the parts of

different assemblies from becoming lost or mixed together.

(3) Arrange the necessary tools and materials where they will be readily accessible during the progress of the repair work. Be sure the containers used for the special cleaning operations are located where dirt will not enter them and they will not be easily upset.

b. DISASSEMBLY PROCEDURE. (1) Disconnect the power and signal-line connections, remove the typing reperforator cover, and dismount the typing reperforator unit, in the manner described in subparagraphs below.

(2) Remove the ribbon, roll of tape, and any paper tags or forms that may be subject to damage while the typing reperforator is being cleaned and repaired.

(3) Before disassembling the various units and assemblies, clean any excess quantities of oil, grease, or dirt from around the nuts, screws, and fasteners that must be loosened or removed so that the wrenches and other tools will fit them properly.

(4) Proceed to disassemble the various parts and assemblies using the particular tools designed for each item.

Note. Do not disassemble any units or assemblies beyond the point necessary to thoroughly inspect and clean the entire mechanism and repair or replace any defective parts.

(5) When small parts are disassembled, place them in a container and mark them to identify their origin.

(6) Refer to index in appendix II for illustrations showing location of parts and part numbers.

(7) Vary the sequence with which the work is completed in any manner that will make it possible to speed up the work involved without sacrificing the quality. Most experienced mechanics prefer to complete the cleaning, washing, drying, etc., of as many parts as possible before starting to repair, adjust and lubricate the various units. This permits an early and accurate appraisal of the number of parts requiring repair or replacement and the amount of time required to complete the work.

134. Instructions for Special Cleaning Procedures

a. GENERAL. Equipment that has been disassembled for major overhaul can be thoroughly cleaned by immersing and brushing the parts in containers filled with the appropriate cleaning fluids.

Caution: Do not immerse equipment wiring, resistors, capacitors, motor armature, or motor windings.

b. USE OF SPECIAL CLEANING MATERIALS. The following cleaning fluids normally available through supply channels are satisfactory for use as described below.

(1) Use a soap and water solution to remove nonoily dirt from nonelectrical rubber and cellulose parts on carrying chests.

(2) Use cleaning compound, stock No. 6G236, to remove oil, grease, gummy dirt. Soak 10 to 15 minutes and flush with very hot water.

(3) Use dry-cleaning solvent (SD) to remove oil, grease, gummy dirt, and paper lint.

(4) Use carbon tetrachloride only for cleaning electrical contacts.

(5) Use diacetone alcohol to remove ditto or hectograph ribbon stain from metal, rubber, or cellulose parts.

c. DRYING. (1) *Wiping.* Dry parts by wiping with a clean, dry cloth. Be careful to dry the cleaning fluid from all the crevices of the parts.

(2) *Oven drying.* Dry the parts in an improvised oven heated with electric lamps and adjusted to maintain a temperature of about 160° F. Leave parts in the oven from 1 to 2 hours.

135. Inspection Procedure for Major Repairs

a. GENERAL. The inspection procedures for a major overhaul include all items listed in the preventive maintenance check list in part three together with additional items which may be inspected while the typing reperforator is disassembled. The inspection will be made to determine which parts are satisfactory for re-use, which require repairs, and which must be replaced with new parts. If the typing reperforator is damaged by foreign objects or during shipment, it may only be necessary to disassemble and inspect one of the principal units and give the remainder of the typing reperforator a preventive maintenance inspection.

b. FREQUENCY OF MAJOR OVERHAULS. Wide variations in the age and general physical condition of the typing reperforator and the experience of the lower echelon maintenance personnel who complete the preventive mainte-

nance work will all affect the need for disassembling the equipment for a major overhaul. Differences in the climatic conditions under which the equipment is operated will also affect the length of time between major overhauls. Do not completely disassemble typing reperforators until the regular preventive maintenance inspection indicates that the general wear on the parts has reached the point where they should be disassembled to permit a thorough inspection. Typing reperforators operating 8 to 12 hours per day will ordinarily not require a complete overhaul by a higher echelon shop more often than at 6- or 8-month intervals. Typing reperforators operating less than 8 hours per day may be maintained in such condition that a complete overhaul is not warranted even at the end of a year in the service; very old and well-worn equipment operating in tropical regions may require a major overhaul every 3 or 4 months. *In all cases the thoroughness of the preventive maintenance work performed by the second and third echelon personnel is the principal factor in determining how frequently the typing reperforator must be taken out of service and returned to a higher echelon shop for a major overhaul.*

c. PROCEDURE. Make the inspection on typing reperforators incidental to repairs after all parts have been thoroughly cleaned. Include all related items listed in the preventive maintenance check list in part three and in addition include a thorough inspection of the wearing surfaces of gears, cams, levers, springs, bearings, etc., which can be inspected only after the equipment is disassembled. While the parts are disassembled, make a thorough inspection of the surfaces of all castings and supporting parts to determine that no breaks or cracks exist. Inspect the condition of all wiring, insulating strips, and terminal blocks while they are accessible. Check carefully the surface condition of all clutches, commutators, contacts, etc., and the end play of bearings in accordance with detailed instructions in other paragraphs of this section and related paragraphs in the requirements and adjustment data, section XV.

136. General Reassembly Procedure

Reassemble all parts, subassemblies, and units in accordance with the following provisions:

a. Replace all worn or broken parts that cause malfunctioning of the typing reperforator and adjust according to directions in the appropriate paragraph in section XV. Replace, while the equipment is disassembled for check and repair, any worn parts that have not caused trouble, but are likely to cause it before the next complete overhaul of the typing reperforator.

b. Assemble replaced parts and associated parts firmly. Tighten all fasteners, screws, nuts, and bolts carefully.

c. Readjust all parts disturbed or replaced during repairs at the time of, or immediately after, their assembly.

d. When dented or flattened areas prevent proper turning and adjusting, remove the damaged parts and repair or replace.

e. Bent or distorted parts may be restored to shape and re-used, provided that no cracks result which would be likely to cause future failure in service, and that hardened surfaces have not been softened by repairs.

f. If the locking edges of lockwashers removed during repairs are rounded, replace the lockwashers by new ones.

g. Replace screws or nuts with damaged heads.

h. When screws, nuts, or other parts are locked in place by locknuts, don't loosen these parts or remove them without first loosening the locknut. (Such a procedure may damage the threads.) Set up loosened or removed parts tightly on reassembly.

i. Remove slivers and sharp burrs that are a hazard.

137. Introduction to Motor-Unit Repairs

a. Complete disassembly and overhaul of the motor unit should be made *only* when the motor starts to give trouble and then only by specially-trained personnel.

b. The overhaul should include complete disassembly and cleaning of the motor, inspection and replacement or repair of burned governor contacts, worn end-ring brushes, worn commutator brushes, grooved or burned commutators, worn motor bearings, or poor insulation. The motor need not be completely disassembled to replace or repair brushes or governor parts, and these may require repairs or replacement more often than once every 6 months.

138. Disassembly of Motor for Major Repairs (fig. 96)

Use the following sequence of steps when disassembling the motor for repairs.

a. Remove the motor unit from the base by removing the three mounting screws and unsoldering the power leads at the terminal block.

b. Remove the motor pinion, governor-brush bracket assembly, and the governor. Be careful and do not lose any of the shims that may be on the armature shaft between the governor hub and the end frame casting of the motor.

c. Remove any external bearing retainer screws.

d. Remove the brush-holder caps and remove the brushes.

e. Remove the motor frame bolts or screws and separate the parts by prying gently with the blade of a screw driver. Lift out the armature. Do not drop the armature or damage the windings. Do not lose any of the parts, such as bearing retainers, spring washers, etc.

f. Remove the armature bearings using the No. 84020 bearing puller (not furnished as part of Tool Equipment TE–50).

Caution: On bearings which have a built-in dust shield, use the No. 84020 bearing pulley with extreme care. Position the bearing puller so that pressure is exerted on the outer bearing race *only*. Pressure exerted on the dust shield will crush the shield and destroy the bearing. *Do not attempt to pry the bearings off with a screw driver.*

139. Special Cleaning Instructions for Motor

The instructions given in this paragraph are for the cleaning of the internal parts of the motor. Refer to paragraph 46*d* for instructions for cleaning the external parts of the motor.

a. Disassemble the motor. (See par. 138.)

b. Clean all dust, paper lint, nonoily dirt, etc., from the stator and armature windings by brushing carefully with a clean, dry sash brush.

Caution: Be careful not to damage the windings.

c. Clean all oil, grease, or gummy deposits from the face of the armature and stator by wiping with a piece of clean cheesecloth that has been dampened with dry-cleaning solvent (SD). Do not use an excessive amount of dry-cleaning solvent (SD).

d. Clean the end bells, bearings, motor pinion, and other all-metal parts by immersing in a container of appropriate cleaning fluid. (See par. 134.) Be sure to dry and lubricate the parts as directed for each of the cleaning materials. Use a sash brush to remove dirt, grease, or gummy deposits.

e. Clean all dirt, dust, oil, grease, gummy deposits, or other foreign material from the commutator by rubbing with a piece of clean cheesecloth dampened with carbon tetrachloride. Be careful not to damage the windings.

Note. Discoloration of the commutator segments caused by the carbon particles becoming imbedded in the face of the segments should not be removed unless the commutator must be refinished because it is badly grooved or if the brushes spark excessively. Refer to paragraph 141 for information on resurfacing the commutator.

140. General Instructions for Replacement and Repair of Motor Armature

a. After long periods of operation, the commutators of series motors become worn and grooved by the brushes and require resurfacing as described in paragraph 141. If the surface of the commutator is not grooved deeply and has a smooth, even, grayish coating of oxide, no repairs are required unless there is excessive sparking at the brushes under load.

b. If there is excessive sparking of brushes on a commutator that is not grooved or pitted, clean the commutator with cloth moistened with carbon tetrachloride, turning the shaft over by hand after the brushes are removed as described in paragraph 142.

c. If there is still excessive sparking, remove the armature from the motor and clean the commutator lightly with #0000 sandpaper. To do this, wrap a piece of sandpaper around the commutator and rotate the armature in a lathe or between other fixed centers, holding the sandpaper lightly by hand.

Note. The copper commutator segments frequently become quite dark because carbon particles from the carbon brushes become imbedded in the commutator segments. This discoloration greatly increases the life of the segments. DO NOT polish to remove the discoloration unless the segments are deeply grooved.

d. Inspect the commutator carefully to determine if it is necessary to undercut the seg-

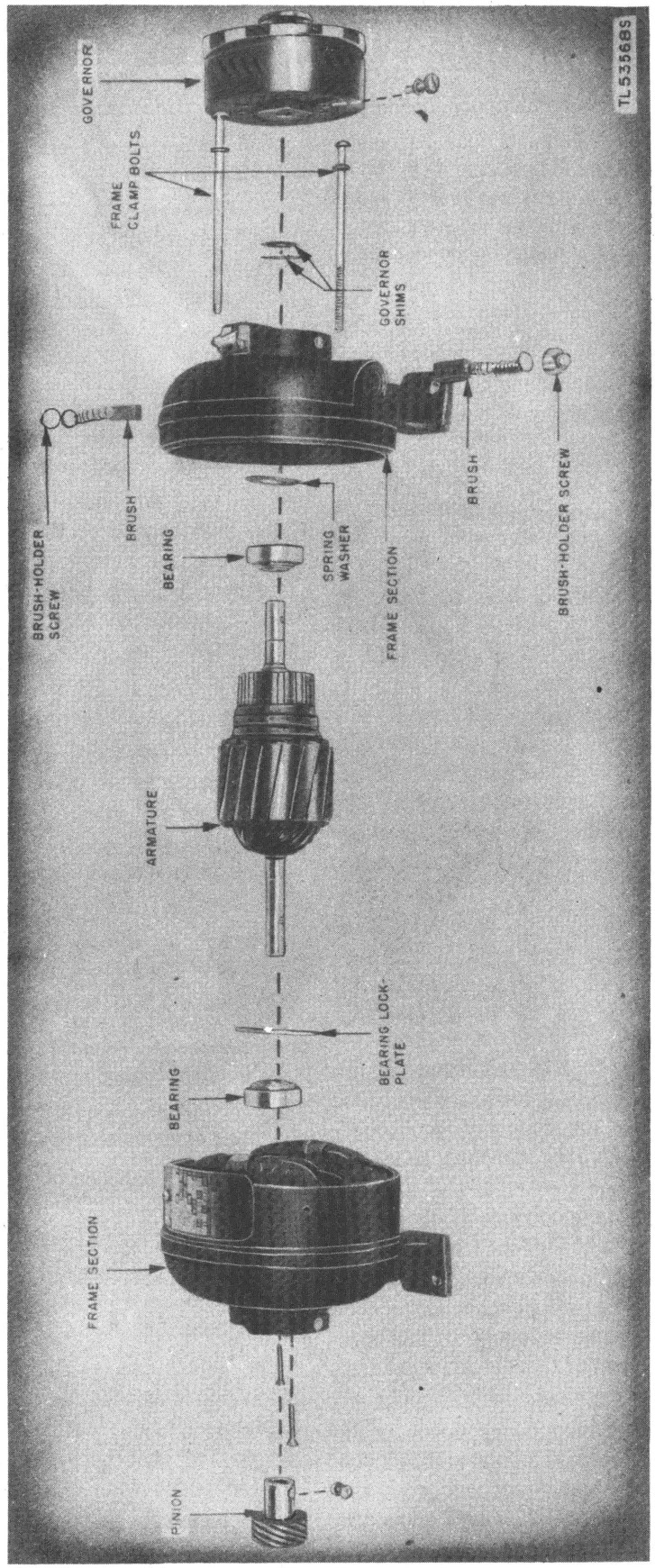

Figure 96. Disassembly of motor.

ment insulators. The top of the insulator must be below the level of the adjoining commutator bars to prevent small carbon particles from the brushes lodging in the separators and shorting the bars.

e. Lower echelons should replace the motor when the commutator requires resurfacing and higher echelons should complete repairs or replace the motor in accordance with local instructions.

141. Resurfacing Motor Commutators

When authorized by local instructions the commutator may be resurfaced by experienced personnel as follows:

a. REFINISHING COMMUTATOR SURFACE. (1) Mount the motor armature between centers on a lathe so that the armature shaft does not run out of line more than 0.0005 inch. Place a sharp cutting tool in the tool rest and set the tool rest so that light cuts will be made. Make a series of light cuts across the entire width of the commutators by moving the tool rest up and down the length of the lathe. Generally movement of the tool rest will be automatically controlled by a worm gear. Take care not to get deep cuts in the commutators. Continue the cuts until enough metal is removed to eliminate the grooves and rough spots in the surface. DO NOT REMOVE MORE METAL THAN NECESSARY.

(2) Polish the commutator with a strip of fine sandpaper (#000 or #0000) held in flat contact with the armature as it revolves in the lathe.

Caution: Do not attempt to smooth a rough commutator with sandpaper unless a lathe is available. DO NOT use emery cloth or carborundum paper as loose carborundum particles may cause trouble in the electrical circuits.

b. UNDERCUTTING COMMUTATOR BAR SEPARATORS (INSULATORS). (1) Tool equipments furnished to the larger repair shops may be equipped with any one of several types of undercutting tools. Do not attempt to use special undercutting tools until the directions furnished with them have been carefully studied.

(2) If no standard undercutting tool is available, improvise a tool from a piece of hacksaw blade. Grind the sides of the teeth so that the total width of the teeth is a little less than the width of the separators. Hold this improvised tool at an angle so that only one or two teeth are in contact with the mica, and draw the tool in a direction away from the windings. Repeat the process until the surface of the mica is 1/64 to 1/32-inch below the surface of the metal segments. Repeat for all the segments.

Caution: After the mica has been undercut between all segments, check to be sure that no slivers of metal remain in the slots. These slivers would short the commutator segments and burn out the windings when the motor is started.

142. General Instructions for Replacing Motor Brushes

a. In removing the brushes, note or mark the position so that the brush may be replaced in the same holder and with the same side uppermost. If the brush has a number stamped on the carbon, this may be used as a guide.

b. Inspect the brushes as follows:

(1) Check to be sure at least 5/16-inch of brush material remains.

(2) Check to be sure the surface bearing on the commutator constitutes at least one-third of the brush face.

(3) The brushes should make contact across at least three-fourths of the long dimension of the brush face.

c. If the above requirements are not met, substitute a new brush which has been properly surfaced. (See par. 143.)

143. Surfacing and Installing Motor Brushes

The method of shaping the brush face to the proper curvature is as follows:

a. Wrap a piece of #0000 sandpaper around a sector of the armature under the brush holder.

b. Place the brush in the holder with the numbered or marked side up, bearing against the sandpaper under the normal pressure of the brush spring.

c. Turn the armature (around which the sandpaper is wrapped) back and forth by hand until the brush surface has the proper curvature. The last turning of the armature should be in the normal direction of rotation.

d. Remove the brush and bevel the edges slightly with sandpaper.

e. Wipe off the brush with a piece of cloth slightly moistened with carbon tetrachloride.

f. See that the pigtail inside the brush spring is intact, free from kinks, and will allow the brush spring to extend properly.

g. Clean out the brush holder with cloth moistened with carbon tetrachloride and wrapped around a screwdriver blade or similarly shaped tool.

h. Reinsert old brushes in the same brush holder and with the same side uppermost.

i. Insert a new brush or a brush that has just been resurfaced with the numbered side up.

j. See that the brush moves freely in the brush holder. Check the pressure of the brush springs and see that they meet the specified requirements.

144. Replacing Armature Bearings

a. GENERAL. (1) Install new bearings if inspection of the old bearings indicates that the bearings are burned, cracked, badly worn, or injured in any way.

(2) Handle the bearings both before and after cleaning carefully. See that no dirt gets inside the bearing races. Lubricate all bearings, including old bearings found to be in good condition by cleaning and inspection; also lubricate new bearings with grease before they are placed on the shaft. In addition to the lubrication factor, the grease aids in preventing dirt from entering the bearing while it is out of the motor. Use a paper washer placed over the exposed side of the bearing as a further aid to prevent dirt from entering the bearing.

b. INSTALLATION OF BEARINGS. (1) In the larger repair shops some type of arbor press or bench vise will normally be available. This can be used to press the bearings onto the armature shaft.

(*a*) Slip the bearings onto the armature shaft as far as they will go fingertight with the dust covers (when bearings are so equipped) nearest the windings.

(*b*) Prepare two blocks of hard wood of equal length and about 1 inch longer than the shaft extension. The hardwood block must be shaped to avoid any pressure on the ball bearing or outer race. Place one of these blocks on each side of the shaft, with one end bearing against the inner bearing race and the other against the rear vise or arbor press jaw. Place another block between the other end of the armature shaft and the other vise or arbor press jaw. Tighten vise very slowly until there is an even pressure exerted on *both* sides of the bearings. *Be careful not to bend the shaft.* Tighten the vise slowly until the bearing is pressed completely against the shoulder on the armature shaft. Repeat the procedure to mount the bearing on the other end of the armature shaft. Figure 97 shows the method of pressing a bearing on the armature shaft using a vise.

Note. This bearing can be taken apart. If possible disassemble and assemble it on the shaft. Then the inner race can be removed and replaced on the shaft with less danger of injury to the other bearing parts.

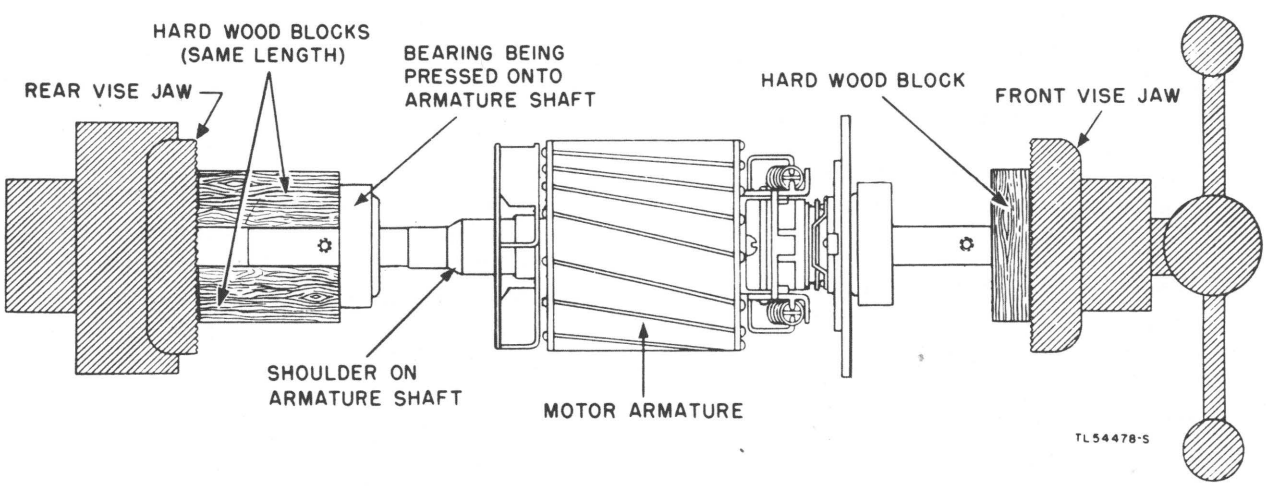

Figure 97. Pressing armature bearing onto its shaft by use of a vise.

(2) When a suitable press or vise is not available and bearings must be installed on the motor shaft, the following method may be used when authorized as a field expedient.

(*a*) Slide the bearings onto the armature shaft as far as they will go fingertight with the dust covers (when bearings are so equipped) placed nearest the winding.

(*b*) Prepare a piece of copper or brass pipe about 1 inch longer than the shaft extension and having an inside diameter slightly larger than the diameter of the armature shaft. Slip the copper or brass pipe onto the shaft so that it bears against the inner bearing race. If copper or brass pipe is not available, use iron pipe and a brass washer to keep from damaging the inner bearing race.

(*c*) Stand the armature on end with the pipe resting on the bench or work table. (See fig. 98.)

(*d*) Place a block of hardwood over the other end of the armature shaft and pound with careful, even strokes until the bearing is forced firmly against the shoulder of the shaft.

Caution: Be sure the pipe bears against the *inner* race of the bearing. Also be careful not to bend or otherwise damage the armature shaft.

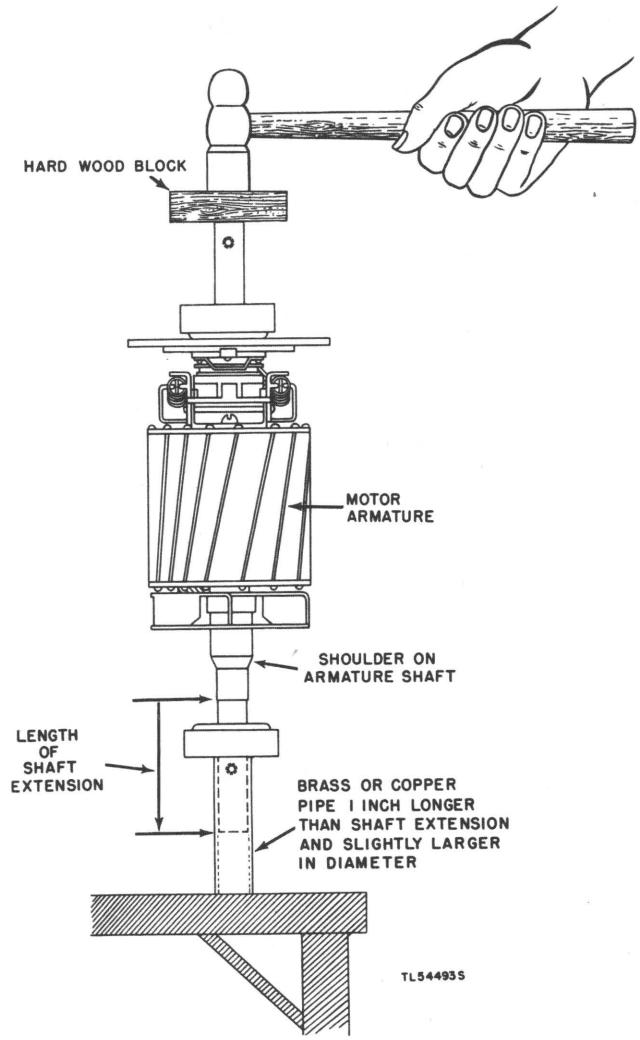

Figure 98. Mounting bearings on the armature shaft by use of hammer and soft metal pipe.

145. Reassembly of Motor

a. PREPARATION. Thoroughly clean and dry the motor before reassembling. Examine the bearings and parts which should be free from dirt before the reassembling is started.

b. STEP-BY-STEP REASSEMBLY. (1) Position the bearing retainer so that the holes match the position of the retainer screws.

(2) Insert armature into stator so that the bearing opposite the commutator end of the shaft enters the end bell. Do not use force as the bearing should enter the end bell easily.

(3) Remove the commutator brushes if they are still in the end bell, and place the end bell on the commutator end of the shaft. Gently tap the end bells into place.

(4) Replace the motor frame bolts and tighten opposite sides at the same time so as not to screw the end bells.

(5) Using a toothpick or piece of stiff wire, move the bearing retainer ring into position so that the retainer ring screws can be started. Tighten both retainer screws at the same time.

(6) Replace the motor pinion and pilot screw.

146. Introduction to Governor Repairs

a. GENERAL. Governor contacts cause considerable trouble when they are not in good condition. All governor contacts in good condition have an over-all grayish color. When the contacts become pitted, or the grayish color does not cover 75 percent of the contacting surfaces, replace *both* contacts with new contacts. (See pars. 147 and 148.)

Caution: Always replace governor contacts in pairs. Do not touch the contacting surfaces

with the fingers because even minute deposits of moisture or dirt will cause arcing and pitting.

b. CONTACTS IN SATISFACTORY CONDITION. The surfaces of governor contacts may be covered with very small build-ups and craters and the governors still operate satisfactorily. Figure 99 shows an enlarged view of small build-ups on one contact that almost entirely match the craters on the opposite contact, thus giving a miximum of contacting surface. Contacts in this condition need not be replaced unless trouble is experienced in securing and maintaining the proper speed adjustment.

c. COMMON CAUSES OF CONTACT TROUBLE. (1) Trouble due to poor surface condition is frequently the result of a previous attempt to burnish or file a new surface on old contacts. In such cases the build-ups have been removed as shown in figure 99 but the craters still exist with the result that the amount of contacting surface is reduced.

(2) A shift in the position of either contact (except while adjusting new contacts) will result in build-ups and craters being positioned as shown in figure 99. This condition results in extremely erratic motor speed since practically all of the contacting surface has been lost.

147. Disassembly of Governor

When it is desired to completely disassemble the governor-brush assembly, proceed as follows:

a. Remove the screw holding the governor adjusting bracket to the brush spring-plate bracket.

b. Remove the screw holding the governor adjusting bracket to the brush spring plate, and remove the adjusting bracket.

Note. When the governor-brush assembly does not require repair, merely loosen the screw (*a* above) and raise the left end of the governor adjusting bracket so that it pivots (on the loose screw) to the right of the governor.

c. Remove the screws holding the brush springs in place, and remove the springs.

Note. If complete disassembly is not desired, the springs may be pushed aside to allow removal of the governor.

d. Loosen the screw holding the governor to the switch end of the rotor shaft and slip the governor from the shaft.

e. Remove the screws securing the target and governor cover and remove target and cover.

f. Unhook the No. 6323 spring (fig. 100).

g. Loosen the screw which clamps the feather spring on the end of the No. 6314 contact spring (fig. 100), and lift the contact spring out of the governor shell.

h. Remove the nut and lockwasher on the No. 6320 contact screw (fig. 100) and lift out the contact screw.

148. Replacing Governor Contact Points

a. The contact points are made of tungsten material and are attached to the contact screw spring; the upper contact is soldered, the lower contact is secured by fastening with a nut. Heat the old contact points with a soldering iron and remove the points. When a contact requires replacement, replace both the upper and lower contact points at the same time. This procedure tends to eliminate difficulties in seating the contacts.

b. New points are placed onto the contact screw and spring by replacing the whole screw. The new point on the contact screw is properly

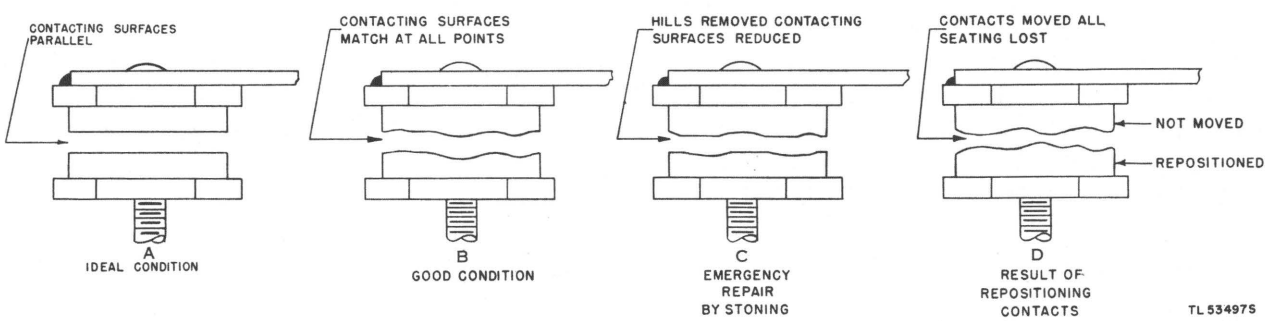

Figure 99. Enlarged diagrams of governor contact surfaces.

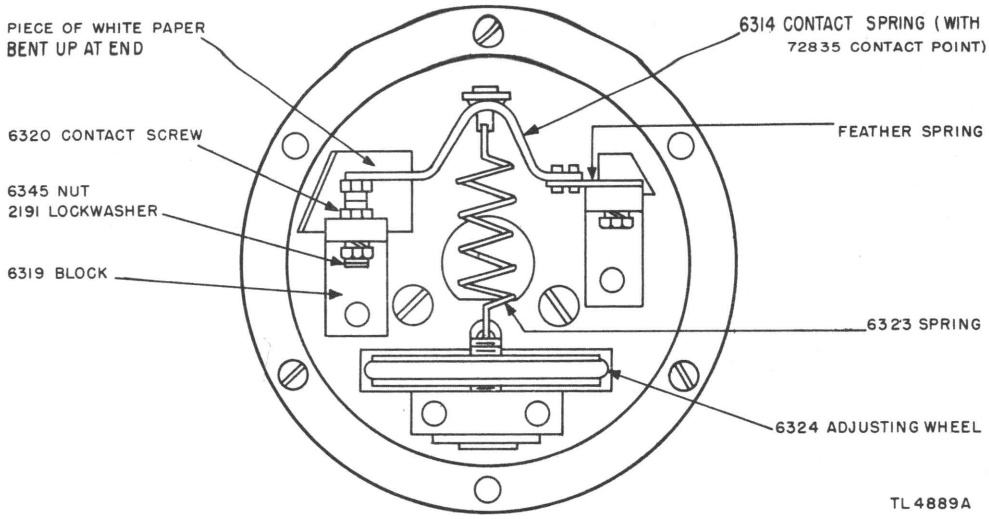

Figure 100. Internal view of governor.

alined when the contacting surface of the new point is perpendicular to a line through the center of the contact screw. (See fig. 101.) The new point of the contact spring is properly alined when there is no appreciable gap between any part of the contacting surface of the new point and the straight edge when checked in the manner shown in figure 101.

Note. Old style No. 6314 contact springs were equipped with contact points which screwed into the spring and were bonded by a drop of solder at the end of the spring. New style contact springs are not threaded and the points are fastened to the contact springs only.

149. Repair of Contact Points

For emergency operation, when trouble is due to build-ups, or when fitting and new contact points are not available, remove both contacts and *lightly,* dress them with a fine carborundum stone (part of Tool Equipment TE–50). A particularly large build-up may have to be knocked off with a screwdriver and then dressed with the carborundum stone. BOTH CONTACTS SHOULD BE REPLACED AS SOON AS POSSIBBLE. THIS IS NECESSARY TO AVOID MORE TROUBLE FROM BUILD-UPS AND PITTING WHICH FORM QUICKLY ON RESURFACED CONTACTS.

150. Reassembly of Governor

a. Insert the No. 6320 contact screw into the hole in its mounting block. Place a No. 2191 lockwasher and a No. 6345 nut on the end of the contact screw. Tighten the nut securely.

b. Insert the feather spring of the No. 6314 contact spring under the clamp on its mounting block and tighten the clamp screw until the contact spring is held friction tight. The contact should remain slightly separated (approximately 0.005 inch).

c. Hook the No. 6323 spring onto the contact spring and turn the adjusting wheel until all tension is released. Contacts should return to the slightly separated position in *b* above.

d. Insert a piece of white paper behind the contacts as shown in figure 102.

e. Illuminate the contacts with a flashlight, or other small lamp, and turn the adjusting wheel until the contacts just touch.

f. Slide the contact spring to the right or left until the sides of the upper and lower contact points are in line. If a gap can be seen on either side of the contacts, loosen the contact mounting-block retaining screw and move the top of the block to the right or left. At the same time, shift the contact spring to keep the contact points in line. (See fig. 102.) Tighten both the contact-spring clamp screw and the contact mounting-block retaining screw.

g. If a gap at the front or back of the contacts is noticed, use a pair of long-nose pliers to twist the feather spring on the end of the contact spring. (See fig. 102.) Repeat any of

the operations that may be required until the contacts meet all requirements for position.

h. Turn the adjusting wheel so that the tension of the No. 6223 spring is near the midpoint of its range.

i. Reassemble the governor cover and target on the governor and remount the governor on the motor.

151. Inspection, Cleaning, and Repair of Governor Contact Disks

a. Clean governor contact disks with a piece of cloth dampened with carbon tetrachloride. A smooth, even, grey coating of oxide is a desirable condition. Don't disturb the contact disks unless there is excessive sparking at the brushes.

b. To remove pits or burned spots from contact disks, use #0000 sandpaper held by hand and with the motor running at normal speed. Hold a piece of cloth with the sandpaper in such a way as to immediately wipe off the cuttings and particles.

c. Don't touch the surface of contact disks with the hand. Minute deposits of moisture or dirt will cause arcing and pitting.

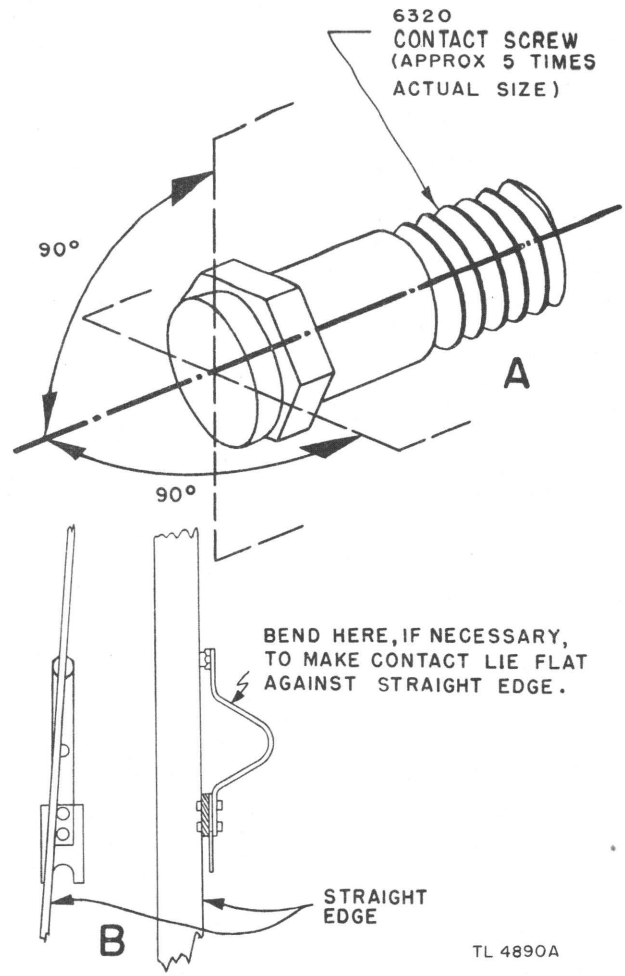

Figure 101. Alinement of new governor contact points.

152. Repair and Replacement of End-Ring Governor Brushes

a. Replace the No. 78403 carbon brushes on the tips of the end-ring governor contact springs when the brushes have worn down to 1/16-inch. Replace the individual brushes in the following manner when it is not desired to replace the entire brush assembly.

b. Unsolder the old brush from the spring. Clean out any solder remaining in the hole from which the brush was removed. Insert the new brush in the hole and solder firmly in place.

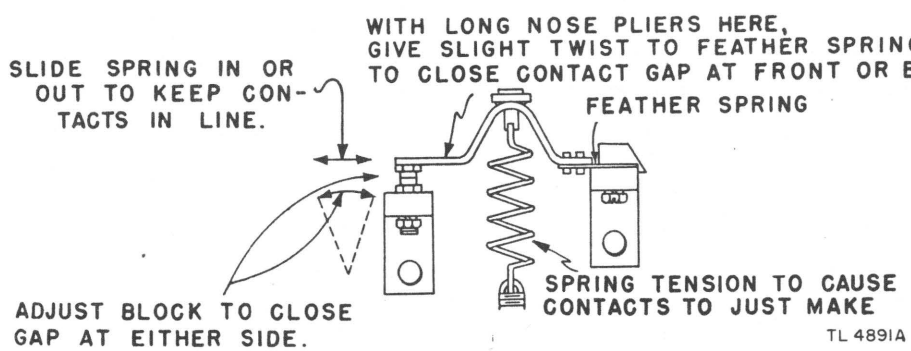

Figure 102. Positioning governor contacts.

c. Place the governor-brush assembly in proper position and tighten the mounting screws.

153. Testing Repaired Governors

a. After the governor is completely reassembled and adjusted, new contacts are seated by running the motor on test for at least 1 hour. Check the speed every 15 minutes and immediately investigate any sudden change in the motor speed.

b. If the motor speed is erratic and the trouble cannot be traced to other parts of the motor, disassemble the governor, and recheck the contacts for build-ups and alinement. If build-ups are found, replace the contacts. After realining the contacts, reassemble the governor and run the motor again for 1 hour.

c. The operation of the governor is satisfactory if the motor speed has not changed appreciably at the end of the test run.

154. Introduction to Keyboard Base Repairs

a. All inspection, cleaning, repairing, replacement, and adjustment of keyboard base parts should be completed with the typing reperforator unit removed from the base.

b. As most of the parts are exposed when the typing reperforator unit is removed, no special disassembly is required for general cleaning and inspection purposes. Instructions for disassembling the transmitter drive-shaft assembly and transmitter (sending) contacts are furnished in paragraphs 157 and 158.

c. For ordinary repair cleaning, refer to preventive maintenance cleaning instructions. (See par. 44*a*.) When an excessive amount of dirt or gummy deposit is encountered, wipe the base with a piece of cloth dampened in carbon tetrachloride then with a dry cloth. A soft brush may be used to brush off the dirty areas and around the wiring.

d. For replacement of keyboard parts not described in this section, refer to requirements and adjustment, section XV.

e. Replacement of transmitter shaft panel requires the removal of the tape-out alarm bell.

155. Replacing Key Tops

a. Replace missing key tops and any that are worn to a degree that makes them illegible.

b. Key tops are removed from the keylevers by turning the tops one-quarter turn in a clockwise direction and lifting them up. Replace the caps by arranging the cap in the normal position and pressing the cap down on the keylever while holding the keylever from underneath. The cap will snap into the proper position.

156. Replacement of Transmitter-Shaft Driven Gear

a. Replace the driven-clutch member if any of the teeth are missing; if the gear is badly worn, and when the requirements of paragraph 190 cannot be met.

b. To replace the gear, remove the driven-clutch member pilot screw, and slide the driven gear from the transmitter shaft. Slide the new member onto the shaft and replace the pilot screw.

c. Adjust the clearance between the driven-clutch member and the transmitter-shaft driving gear. (See par. 189.)

157. Replacement of Transmitter Shaft, Cam Sleeve, and Clutches

a. Replace the transmitter shaft if it is scored. Replace the clutches if teeth are broken or the tips of the teeth are worn. Replace the cam sleeve if the cams are badly worn, if the cam bearing is badly scored, or if there is noticeable play between the shaft and the cam sleeve.

b. To replace transmitter-shaft parts, loosen the bushing adjusting screws nearest the drive gear and remove the bushing. Move the transmitter contacts out of the path of the transmitter-cam sleeve, and remove the cam sleeve from the transmitter contacts in the direction of the drive gear. Slide the cam sleeve, clutch spring, and movable clutch from the shaft.

c. Replace the new parts in the reverse order that the parts were removed.

d. Adjust the transmitter shaft. (See par. 183.)

158. Repair or Replacement of Transmitter (Sending) Contacts

a. Do not clean or burnish transmitter contacts that are working properly. Clean contacts that are out of adjustment or causing

trouble, with carbon tetrachloride; remove build-ups with a contact file; adjust the contacts according to paragraphs 187 and 188.

b. Replace the contacts if the contact springs are broken or if the contacts are badly burned.

c. Replace transmitter contacts as a complete assembly when possible.

d. Dismount the contact assembly by removing the two screws that fasten the contact assembly to the frame.

e. Remove the wiring to the contacts by unsoldering the connections at the terminals. Clean the wires of excess solder, attach to the new contacts, and solder the connections. Exercise care so as not to change the electrical connections to the transmitter contacts.

159. Instructions for Base Repairs (General)

Certain repairs not covered in paragraphs 154 through 158 may be necessary. The instructions given in this paragraph are general and apply to both the keyboard and receiving-only bases.

a. After the typing reperforator unit has been removed from the typing reperforator base, the base plate can be easily taken off by removing the six screws fastening the base plate to the base.

b. All parts and wiring are accessible for inspection and should be cleaned as described in preventive maintenance cleaning instructions, paragraph 34*e*, and special instructions, in paragraphs 44 and 45.

c. Inspect the wiring carefully for damage at fasteners and where it passes through openings in the casting or other parts. When the insulation has been seriously damaged or has been softened by oil and grease, replace the entire length of the wire. When several wires have been damaged, replace the entire harness. Use rubber and friction tape for temporary repairs.

d. Clean all contacts with cloth dampened with carbon tetrachloride. Burnish the contacts and reposition them when necessary. Refer to section XV for instructions on spring tensions.

Note. Refer to section VIII and treat the bottom of the base before reassembling the base plate.

e. Clean cords, plugs, and terminal block connections on the top and bottom of the base as described in section V and replace any parts found on inspection to be seriously worn.

f. After the base has been cleaned, inspect, and if necessary, repair the items listed below:

(1) *Motor switch.* Inspect the guard over the motor switch. If it is broken and no replacement is available, a piece of heavy gage metal may be cut and bolted into place over the toggle. If the switch is broken replace the complete switch.

(2) *Tape container.* Examine the tape container to see that it does not bind the tape roll thus keeping it from turning properly. If the container is bent or has large dents which press against the tape, remove the container by removing the two mounting screws holding it to the base. Open the container and remove any tape remaining on the spindle. Place the container on a flat surface, hold a padded wooden block over the dented or bent surfaces, and tap the block lightly with a hammer until the surfaces are smooth. If the wire rack holding the guide roller is bent or broken, a piece of heavy gage wire may be bent into shape and placed on the container.

(3) *Tape-out lever.* If the tape-out lever is broken and no replacement is available, a strip of metal of the same dimensions should be bent into the proper shape and mounted on the lever shaft.

(4) *Locating pins.* If the locating pins are worn or broken so that they do not hold the reperforator unit in place, the pins should be replaced. If replacements aren't available, short partially threaded screws may be used.

(5) *Frame.* If small cracks are found in the frame casting, repair as instructed in paragraph 169.

160. Introduction to Typing Reperforator Unit Repairs

a. Instructions required for a major overhaul of the typing reperforator unit are given in paragraphs 161 through 166. The instructions are arranged by the principal assemblies and subassemblies of the typing reperforator unit for easy reference when repairs to a single item are necessary.

b. The various assemblies should be disassembled only to the extent necessary to complete the work involved. Complete disassembly of the typing reperforator unit is warranted only when the unit has been subjected to sand, grit, or some corrosive element.

807975 O - 48 - 10

161. Removing and Disassembling Typing Reperforator Unit Subassemblies

a. RANGE-FINDER ASSEMBLY. (1) Remove the two screws that mount the range finder on the selector assembly. (See fig. 34.)

(2) Remove the bell-crank screw and remove bell crank. Remove trip-latch screw, and remove trip latch and spring. Remove stop-lever screw locknut and stop-lever screw. Remove stop-lever spring and stop lever.

b. SELECTOR ASSEMBLY. (1) *Removal of selector armature.* Remove the armature and selector-arm springs. Loosen the outside selector-armature pivot-screw locknut, and remove the pivot screw. Remove the selector armature carefully by moving the armature in the direction of the removed pivot screw until the armature is clear of the opposite pivot screw, and withdraw the armature.

(2) *Removal of selector magnets.* Remove the two screws that mount the selector-magnet switch and remove the selector-magnet switch and the clutch throwout lever contacts. Remove the two screws that mount the magnet bracket to the selector assembly and remove the magnet bracket. Slide the magnet coils off the magnet bracket and move the selector-magnet switch and magnet coil to the side of the typing reperforator unit. This must be done as the selector-magnet switch has soldered connections to the magnet coil. Also the line leads are soldered to the magnet coil.

(3) *Removal of selector assembly.* Remove the three screws that mount the selector assembly on the typing reperforator unit frame. Carefully remove the selector assembly. Move the main-shaft clutch throw-out lever in a direction opposite to its spring pull in order to free the assembly. Handle the selector assembly with care. Don't damage the small parts.

(4) *Removal of the selector arm.* Remove the centralizing eccentric screw from the selector-arm bracket. Remove the two mounting screws from the selector-arm bracket and remove the selector-arm bracket.

(5) *Removal of selector levers, swords, and T-levers.* Remove the selector-lever springs and the locking-lever spring. Remove the five nuts and washers that clamp the separator plates together. Remove the separator plates, swords, T-levers, selector levers, and locking lever.

c. REMOVAL OF TYPE-BASKET ASSEMBLY. (1) Unhook the code-bar locking-lever spring, the LETTERS pull-bar spring and the LETTERS spare pull-bar spring.

(2) Unhook the punch-arm spring and the signal bell-hammer spring.

(3) Remove the three type-basket assembly mounting screws.

(4) Remove the nut from the left ribbon-spool bracket. Remove the rear mounting screw and swing the bracket so that the ribbon-spool cup will not interfere with the type basket.

(5) Remove the mounting screws of the vertical-lever bracket and remove the vertical-lever assembly.

(6) With the pull bars held out of engagement with the pull-bar guide, slide the assembly upward, turning toward the left and out of the unit.

d. REMOVAL OF TYPE BAR. (1) Remove the ribbon and the ribbon guide.

(2) Remove the platen-guide shaft from the platen block. (See fig. 66.) Push the platen block toward the rear and rotate it clockwise out of the path of the type bars.

(3) To remove a type bar, pull it forward and down as far as it will go and lift its pivoted end from the type-bar segment. In case it cannot readily be disengaged from the bearing rod or if it is one of the type bars at the extreme end of the type-bar segment, back off the retaining screw at the left end of the type-bar bearing rod (not more than one full turn) in order to facilitate the removal of the type bar.

e. REMOVAL OF CODE BARS. Remove the two screws fastening the code-bar mounting plate to the typing reperforator frame. Holding the code bars parallel, lift upward disengaging the pull bars and T-levers from the code bars. Be careful not to lose the shims that may stick to the under side of the code-bar mounting plate when it is removed.

f. REMOVAL OF PERFORATING ASSEMBLY. (1) Remove the four perforating assembly mounting screws.

(2) Unhook the punch operating-arm spring.

(3) Remove the mounting screws of the vertical-lever bracket and remove the vertical-lever assembly.

(4) Remove the screws from the terminal blocks on the typing reperforator unit and move them to the side.

(5) Remove the perforating assembly by lifting up slightly and turning to the right.

g. REMOVAL OF MAIN BAIL. DO NOT REMOVE THE MAIN BAIL UNLESS REPAIRS ARE NECESSARY. The code bars must be removed before the main bail can be removed (see *e* above). Proceed as follows:

(1) Remove the two screws holding the motor guard. Remove the motor guard.

(2) Remove the two screws mounting the ribbon-reverse bail. Remove the ribbon-reverse bail, and the oiler felt and clip.

(3) Remove the locknuts from the main-bail plunger and remove the main bail.

162. Repairing and Replacing Type Bars

a. REPLACING TYPE BARS. To replace type bars, reverse the procedure followed in removing them. (See par. 161*d*.)

(1) Lift the pull bar to engage the bottom of the type bar with the bottom notch of the pull bar.

(2) The pull bar is properly engaged with the type bar when the top of the pull bar is in line with the other pull bars and the type bar is resting against the type-bar backstop.

(3) After replacing the type bars, tighten the bearing-rod retaining screw moderately tight.

b. REPAIR OF TYPE-BAR PALLETS. (1) Straighten toes with type-bar toe-straightening tools.

(2) Adjust horizontal alinement by heating the pallet with the soldering tool and moving the pallet up or down by tapping.

(3) Straighten pallets by gripping the type bar firmly with the short-nose pliers just below the pallet and bending the end of the type bar.

163. Reassembling Typing Reperforator Unit Subassemblies

a. In general all parts are reassembled in the reverse order in which they are disassembled. If the parts have been cleaned and the surfaces are free from oil relubricate them as they are reassembled. Give particular attention to all parts which are not easily accessible after the reassembling is completed.

b. Any adjustments which have been altered in the process of disassembling, cleaning, repair, replacement, or reassembly of the parts must be completely readjusted according to the related instructions in section XV.

164. Removing and Inspecting Main Shaft

a. GENERAL. Most repairs to the main-shaft parts are made by replacing the part. Main-shaft parts between the main-shaft bearing locknuts and the nearest shaft end can be replaced without removing the main shaft from the typing reperforator unit. (See fig. 104.) If the main shaft must be removed to get at the part that must be serviced or replaced, completely disassemble, clean, inspect, and lubricate the shaft before assembling it.

b. REMOVAL OF MAIN SHAFT FROM TYPING UNIT. (1) Remove typing reperforator unit from the base.

(2) Remove the three screws that mount the motor to the base and move the motor aside.

(3) Remove the two screws that mount the range finder on the selector assembly, and remove the range finder.

(4) Remove the outer selector-cam friction-clutch plate, by turning the plate clockwise with a large screwdriver, and remove the selector cam.

(5) Remove the two screws that hold the tape-out alarm gear assembly in place and remove the tape-out alarm gear assembly.

(6) Remove the four screws that hold the main-shaft bearing caps in place.

(7) Hold the main-shaft clutch throw-out lever away from the main shaft and remove the main shaft.

c. REMOVAL OF MAIN-SHAFT PARTS. (fig. 104). (1) *Removal of selector cam.* The selector cam may be removed from the main shaft without removing the shaft from the typing reperforator unit. See *b* (1), (2), (3), and (4) above.

(2) *Removal of main-shaft gear.* After removal of selector-cam sleeve, remove the inner selector-cam friction clutch and the selector-unit friction spring. Grasp main-shaft drive gear in one hand and remove the main-shaft bearing locknuts by turning the nuts counterclockwise from the selector-cam end. Remove the main-shaft bearing, the main-shaft clutch, the main-shaft clutch spring, and the bail-cam unit. Remove the bail-cam friction-clutch spring

and friction disk and washer. Remove the three screws holding the main-shaft gear and remove main-shaft gear.

(3) *Removal of keyboard spiral gear.* Remove all parts from the keyboard spiral-gear end. Remove main-shaft bearing locknuts, turning the nuts counterclockwise from the keyboard spiral-gear end. Remove main-shaft bearing. Remove keyboard spiral-gear locknut and washer and remove gear.

(4) *Removal of main shaft for replacement.* Steps 1, 2, and 3 will prepare the main shaft for replacement as far as disassembly.

165. Repairing and Replacing Main Shaft

a. INSPECTION AND REPAIR PROCEDURE. (1) *Gummy friction washers.* Gummy friction washers can usually be cleaned in dry-cleaning solvent (SD). Thoroughly dry and lubricate the washers with oil before reassembly. Replace any washers that have a hardened surface or have lost their absorbent qualities, tears, or worn spots.

(2) *Selector-cam unit.* When the selector cams become worn so that the requirements and adjustments of the selector mechanism given in section XV cannot be met because the points of the selector cam are worn, replace the selector-cam unit with a new unit.

(3) *Drive gear.* Replace the main-shaft drive gear when it becomes badly worn or when the proper clearance cannot be obtained by adjustment. (See par. 227.) Replace the gear if any of the teeth are missing. If the new gear is supplied without the hub, disassemble the old gear unit by removing the three hub mounting screws and lockwashers and use the old hub with the new gear.

b. REPLACING MAIN SHAFT. (1) Remove the typing reperforator unit from the base. The

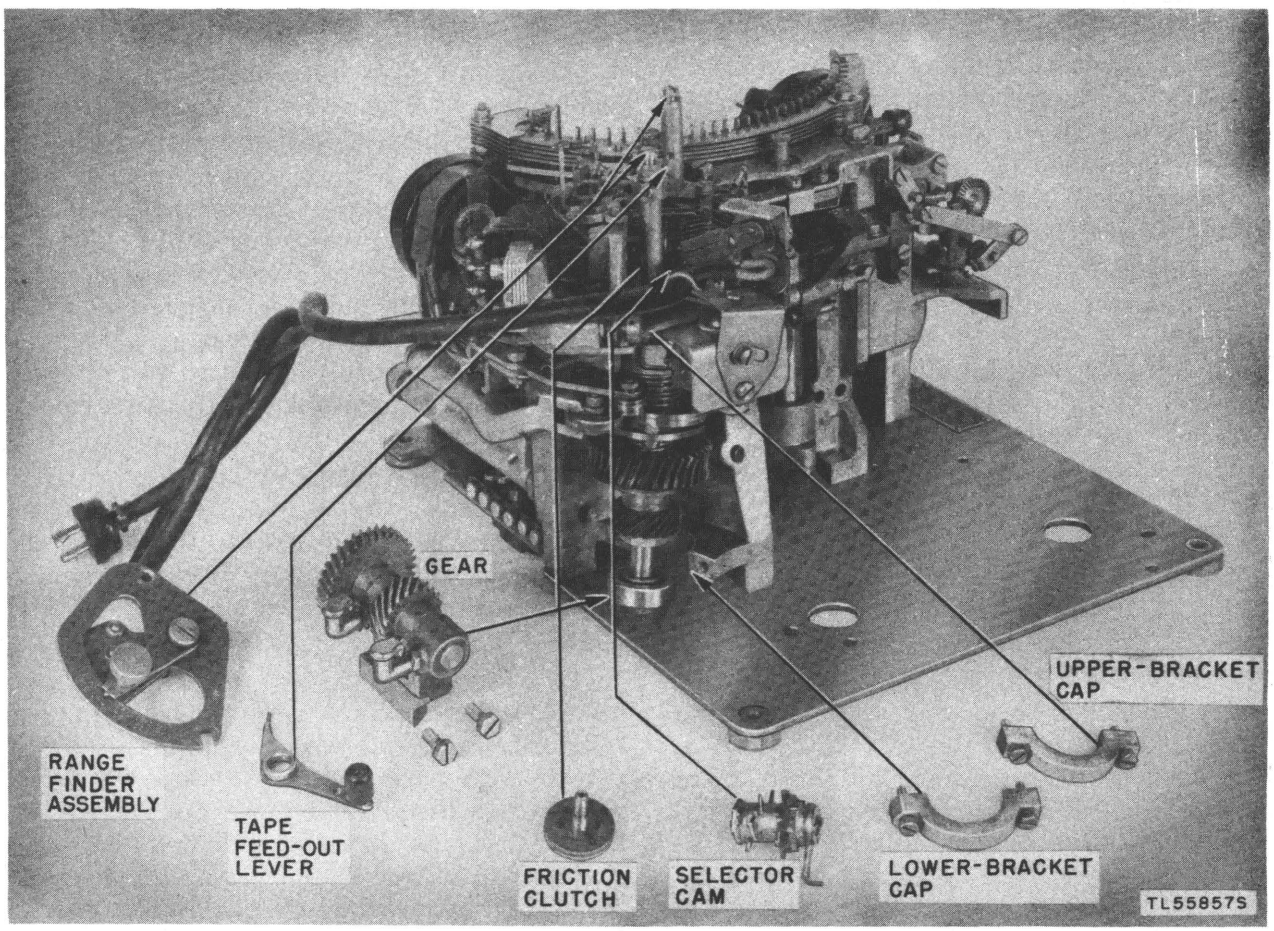

Figure 103. Removal of main shaft from typing unit.

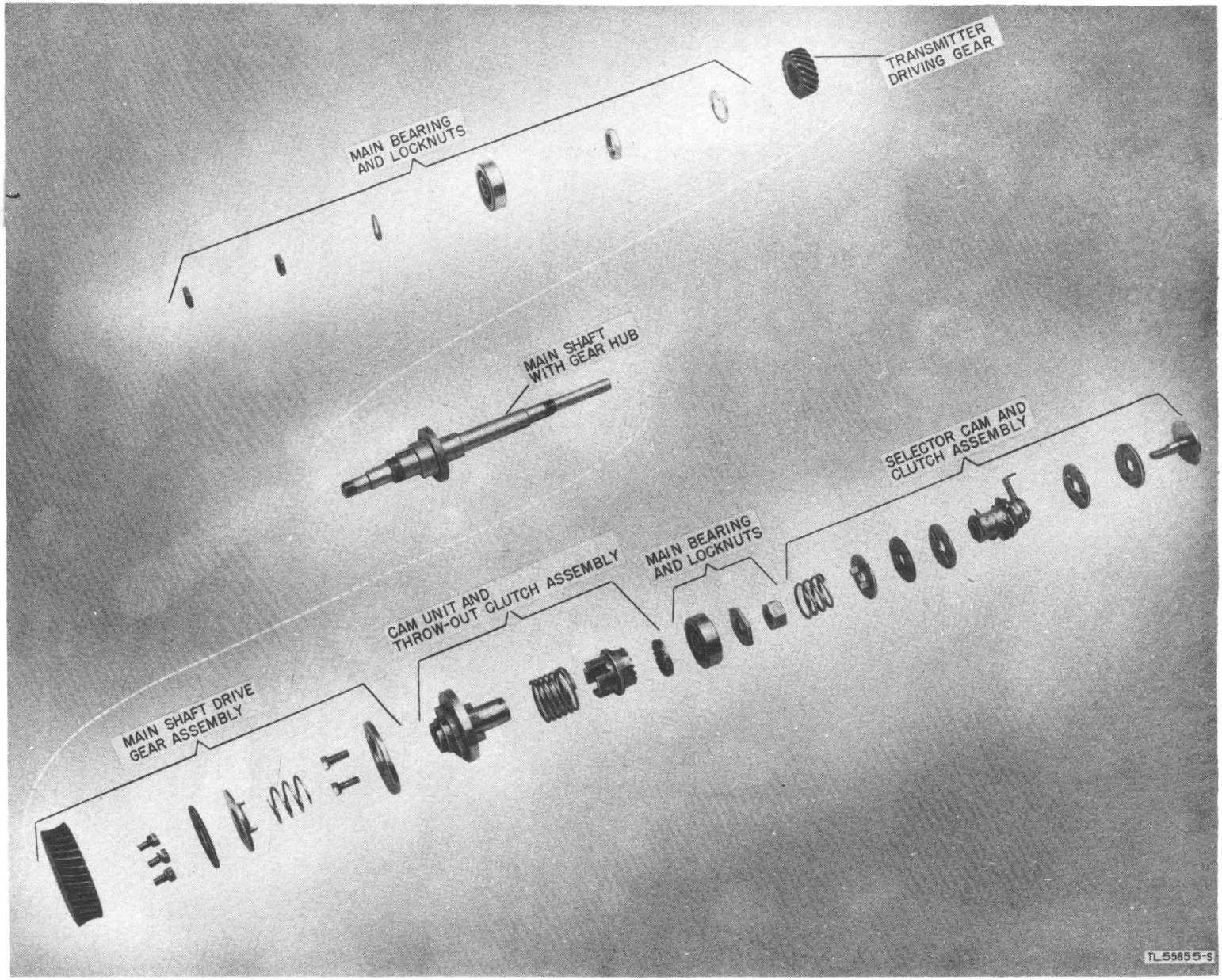

Figure 104. Main-shaft parts in sequence of removal.

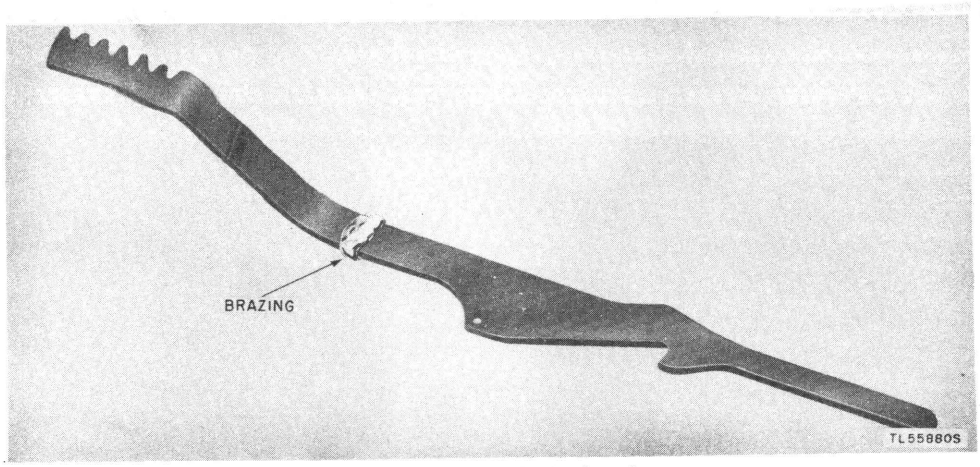

Figure 105. Repair by brazing.

main shaft can be replaced with the selector unit in place but the range-finder assembly must be removed as described in paragraph 164*b* (3).

(2) Remove the selector cam and preceding components from the main shaft if they are not already removed and slide the main shaft into place.

(3) Move the clutch throw-out lever until the main shaft will slide past and into place.

(4) Place the bearing caps on the main bearings and tighten screws just sufficiently to prevent the shaft from shifting.

(5) Place the selector cam and associated parts on the end of the shaft.

(6) Replace the tape-out alarm gear assembly and tighten the screws.

(7) Replace the motor unit tightening the three screws holding it to the typing reperforator unit frame. Make certain that the friction-clutch plates face in the right direction, and that the selector-cam ends fit into the slots of the driven clutch plates. After the driving clutch plate on the end of the shaft has been tightened, check to see if the selector cam can be turned by hand. The cam should turn without difficulty.

(8) Refer to related paragraphs in section XV for complete instructions on the adjustment of the main-shaft and range finder which must be completed before the typing reperforator can be operated.

166. Repair of Punch Block

a. CAUSES OF TROUBLE. Listed below are the most frequent causes of trouble in the punch block. Never remove the punch block until it is determined that preventive maintenance measures will not remedy the trouble.

(1) The tape is jammed in the punch block and will not feed through the feed roll.

(2) The tape feeds through the punch block and feed roll, but perforation is incomplete or faulty.

(3) The tape cannot be threaded into the punch block.

(4) Punch fingers on the punch block are jammed or stuck.

(5) Punch block is filled with collected dust or grit.

(6) The upstop screw is improperly adjusted on the punch block causing improper chadding of tape.

(7) The feed hole punch on the punch block is broken or damaged.

(8) The platen insert on the punch block is worn, causing excessive wear on the type bars and damaging the ribbon.

(9) The die plate is dull causing improper chadding.

(10) Improper threading of the tape through the punch block by the operator in the initial threading of the tape. The operator during this operation will thread the tape properly through the block and the feed roll but will

place excessive tension on the tape and pull it through the block while the perforator is in motion, thereby causing mutilation and uneven spacing.

b. REPAIRS. (1) Minor repairs, such as bits of tape mutilation being stuck between the punch block, may be made without removing the punch block for a complete overhaul. When bits of tape are stuck between the punch block proceed as follows:

(*a*) Turn the motor switch to OFF.

(*b*) Turn the motor by hand until the punches are in their lowest position.

(*c*) Gently insert the 0.002-inch gage from the left side of the block into the tape slot.

(*d*) Push the gage between the die plate and stripper plate. If the above operations do not clear the punch block of tape mutilations, remove the unit and perform a complete overhaul.

Caution: Always turn off motor switch during the dusting or brushing off of punch block.

(2) Trouble may be experienced due to dull die plates. If the die plate becomes dull due to heavy usage, and no replacement parts are available, the following method may be used to sharpen the die plate.

Caution: Do not attempt to sharpen the die plate as long as the tape is being properly punched. This method if repeatedly used will lessen the life of the die plate.

(*a*) Construct a die-plate sharpening tool using a discarded hand-drill bit.

(*b*) Insert the tool in a hand drill. With the die plate held firmly in a small vise, apply a small amount of valve-grinding compound to the openings in the die plate.

(*c*) Slowly revolve the drill until the plate is sharpened.

(*d*) Thoroughly clean the die plate and reassemble the punch block.

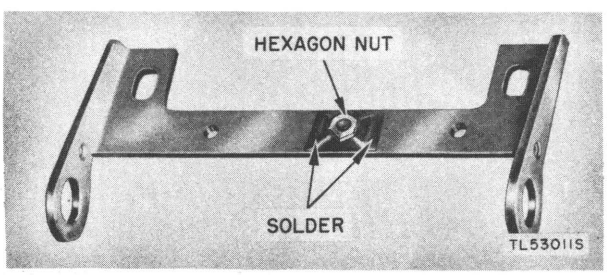

Figure 106. Repair of threads

167. Instructions for Repair and Replacement of Cover

a. The repairs to the various parts of the cover are limited to cleaning as described in preventive maintenance instructions, paragraph 34*e*, and straightening bent parts before the refinishing described in paragraph 168.

b. Replace a cracked or broken glass cover and missing screws.

c. When a cover or door mounting screw is broken and cannot be replaced, drill a hole with a small drill and tap it to accommodate a new flathead screw. Countersink the hole for the head of the new screw.

d. Replace the padding and facing that has become frayed which might drop into the mechanism.

168. Painting and Refinishing

a. When a touch-up job is required on painted surfaces of the typing reperforator, apply paint with a small brush. When numerous scars and scratches warrant complete repainting, remove the cover, panels, etc., and complete the work where there is no possibility of damaging the typing reperforator mechanism. Use dry-cleaning solvent (SD) to soften, and sandpaper to clean rust spots and corroded metal surfaces.

Caution: Don't use steel wool. Minute particles of steel wool frequently enter the case and cause harmful internal shorting or grounding of the circuits.

b. Use only paint authorized and consistent with existing regulations in painting or refinishing the chests or typing reperforator covers.

c. Refer to section VIII for information on moistureproofing and fungiproofing after repairs.

169. Emergency Repairs

a. GENERAL. Under *emergency conditions* normal requirements for new replacement parts may have to be set aside and any available parts, assemblies, or units used to restore service.

Note. USE LOCALLY-CONSTRUCTED OR TEMPORARILY-REPAIRED PARTS AND NONSTANDARD ITEMS OR ADJUSTMENTS TO RESTORE SERVICE ONLY UPON PROPER AUTHORITY AND REPLACE OR READJUST THEM AT THE EARLIEST OPPORTUNITY.

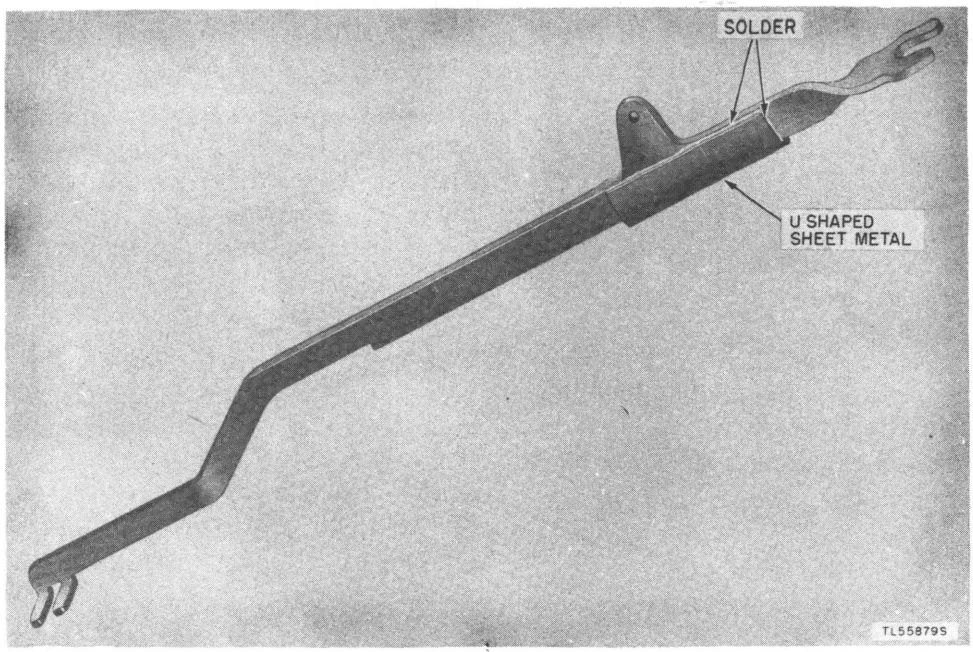

Figure 107. Repair by soldering.

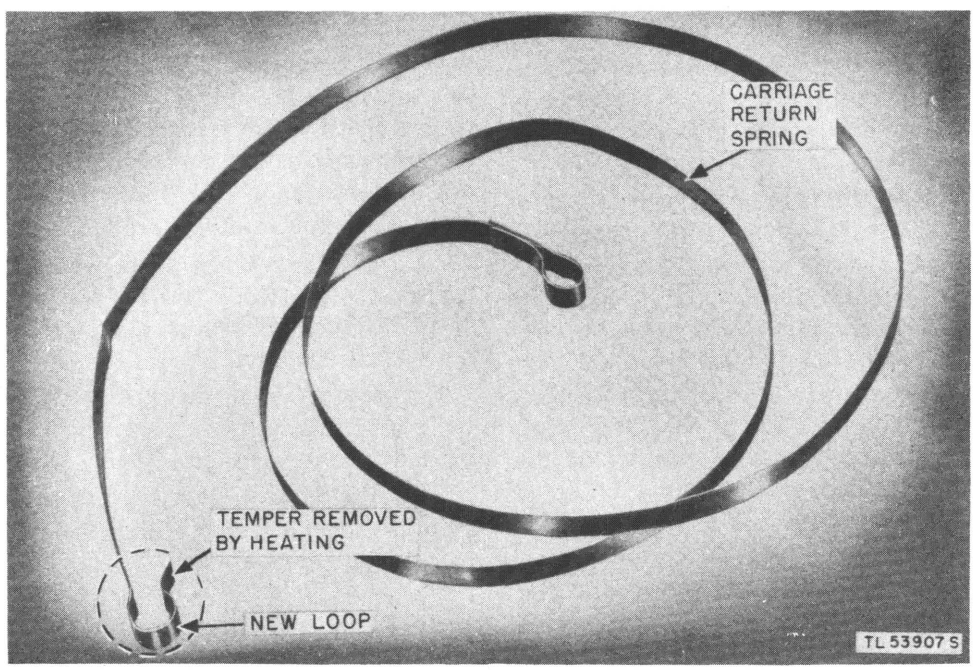

Figure 108. Repair of metal spring.

b. CASTING REPAIRS. Frames of cast-iron or steel may sometimes be repaired by brazing. Figure 105 illustrates a break repaired by brazing. Take great care in setting up broken castings for brazing especially when small errors in positioning cannot be corrected by adjustment.

c. STRIPPED THREADS. (1) When threads in parts have been stripped they can sometimes be repaired by using the next larger size tap

that has the same number of threads per inch, and by using the next larger size screw. For example, a No. 6–32 thread that has been stripped can be retapped with a No. 8–32 tap, and a No. 8–32 screw used instead of the No. 6–32 screw.

(2) When the above method is not suitable, repairs may sometimes be made by drilling a clearance hole for the screw, and soldering a steel hexagon nut over the hole on the side away from the screw. (See fig. 106.)

d. REPAIRS BY SOLDERING. Solder may be used in joining any metals which can be tinned, such as copper, brass, or steel; but the repairs must be made in such a way that there is little strain on the solder. Figure 107 shows a repair to a steel bar using solder and a piece of sheet metal bent in the form of a U. Both the sheet metal and the repaired part must be tinned by using an acid flux. In the above example, a large area of solder holds each side of the broken part to the sheet metal, and the sheet metal gives the joint strength. When acid flux is used for tinning, the parts must be cleaned in hot water to remove the traces of acid left after soldering.

e. TEMPERED METAL PARTS. (1) Parts, such as small springs broken near the ends, may sometimes be used by turning up a new end loop with a pair of pliers.

(2) Large springs and tools that are broken near the ends can sometimes be heated and bent into shap. Figure 108 shows a spring, the end of which has been repaired by heating and reshaping. Certain tools can be heated, reformed, hardened, tempered, and resharpened in order to restore their usefulness.

Section XV. REQUIREMENTS AND ADJUSTMENTS

170. Introduction to Test Requirements and Adjustment Procedures

a. GENERAL. The data in this section include all test requirements and adjustments for typing reperforators. The information is arranged in the sequence that will normally be followed when a test and adjustment of a complete typing reperforator is undertaken.

Note. The adjustments given in this section apply to all the typing reperforators covered in this manual. No changes in mechanical adjustments are required when the typing reperforators are adapted to receive from cam-type transmitter distributors which operate at 390 operations per minute.

b. INDEX. When a complete test and adjustment is not involved, refer to the index to locate the desired information.

Caution: Always remember that a change in any one adjustment requires the checking of all related adjustments.

171. Details of Requirements and Procedures

The information in each paragraph is arranged under three headings: preparation, requirements, and adjustments.

a. PREPARATION. Necessary instructions for arranging the unit for testing or adjusting are furnished under this heading.

b. REQUIREMENTS. Measurements, spring tensions, settings, etc., that have been found to give the best results are furnished under this heading. Some requirements have a very small working margin and others have a large working margin. Owing to slight differences in various machines of the same model, some reperforators function much better when clearances are adjusted to minimum values recommended, other reperforators give better results with clearances adjusted to maximum values. The same is true for spring tensions, air gaps, etc. Therefore, the requirements given in this manual for clearances, spring tensions, etc., should be applied as necessary to give the best results and operation.

c. ADJUSTMENTS. Each adjustment is described in the text and for emphasis is often indicated in the illustration. The adjustments vary in nature, including replacing an old spring with a new one, bending a leaf spring with a spring bender, cutting and then forming a new loop end on coil springs, repositioning an eccentric screw, inserting shims between

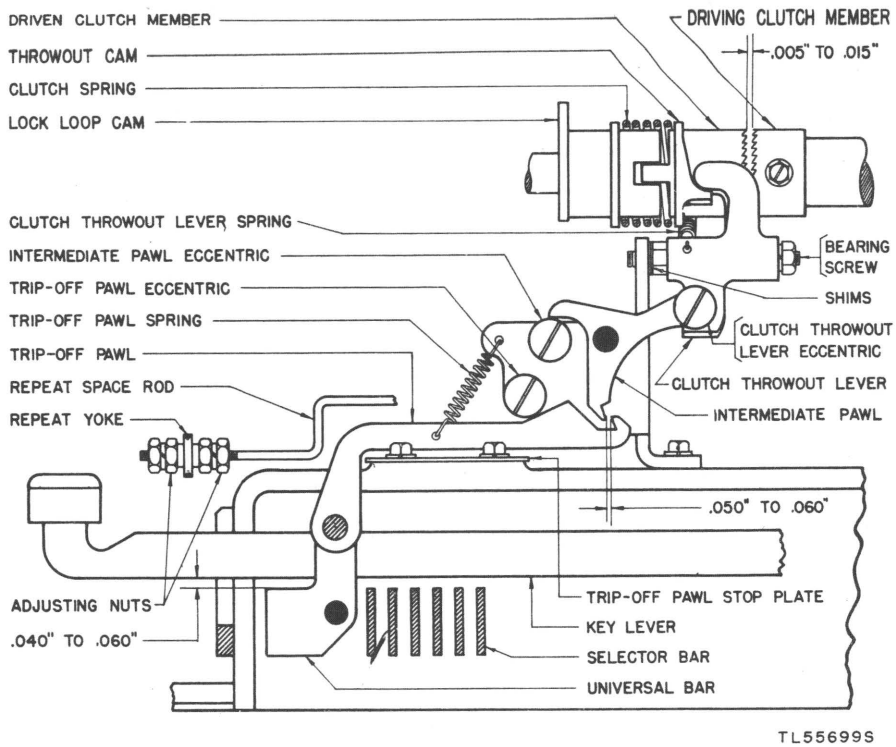

Figure 109. Keyboard base requirements.

parts, etc. As a starting point when making adjustments set the clearances etc., midway between the minimum and maximum values until it can be determined if more critical adjustments are required.

172. Preparation for Checking and Adjusting

a. GENERAL. Reperforator adjustments are made on the basis of various units and assemblies. To facilitate checking and adjusting, it is necessary to remove some of the units and assemblies, or to set up certain functions.

b. REMOVING AND REPLACING ASSEMBLIES AND UNITS FROM ASSOCIATED EQUIPMENT. Refer to disassembly and reassembly information in section XIV for detailed information when required.

c. SETTING UP CERTAIN CHARACTER OR FUNCTION. When the instructions for making an adjustment specify the setting up of a certain character or function, use the following method: rotate the motor fan or governor counterclockwise, as viewed from the fan or governor end, until the locking lever is about to drop off the long high part of the locking cam. Move the armature extension (if the unit is equipped with a pulling magnet selector) or the selector arm (if the unit is equipped with a holding magnet selector) to the operated (marking) or unoperated (spacing) side in accordance with first selecting impulses of the code combination to be set up. Refer to code chart. (See fig. 21.) Hold the armature extension or the selector-arm extension in this position, and again rotate the motor fan or governor until the top (No. 1) selector sword has been positioned and the locking lever is on a peak of the locking cam. Position the armature extension or the selector-arm extension in accordance with the second impulse of the code combination to be set up and repeat the procedure followed in positioning the top (No. 1) selector sword. Position all of the selector swords following the foregoing procedure. When all swords have been positioned and the main clutch has been engaged, further rotation of the motor fan or governor will cause the unit to select the character or to perform the function which has been set up.

d. SPRING TENSION. Spring tension values given in this manual were derived from meas-

urements made with teletype spring scales which are calibrated for use in a vertical pull position; when the scales are used in any other position the reading is an indicated value. To get the proper spring value readings, use spring scales included in the teletypewriter tool kit as shown in the illustrations.

e. FIXED PIVOTS. Solid black circles in illustrations indicate fixed pivots.

173. Universal-Bar Pilot-Screw Adjustment (fig. 109)

a. PREPARATION. Remove reperforator unit from keyboard base. Remove the base cover plate.

b. REQUIREMENTS. The trip-off pawl should be approximately midway between the sides of the slot in the casting, and the universal bar should have some end play, not more than 0.010 inch.

c. ADJUSTMENT. Loosen the universal-bar pilot screw, move the trip-off pawl until it is midway between slot sides, insert 0.010-inch gage between shoulder of pilot screw and universal bar, retighten pilot screw. Tighten locknuts.

174. Tape-Out Lever Adjusting-Clamp Adjustment (fig. 110)

a. PREPARATION. Remove reperforator unit from keyboard base. Remove the base cover plate.

b. REQUIREMENTS. There should be a clearance of ¼-inch (plus or minus 1/32-inch) between the tape-out lever and the tape-reel roller, with the locking pawl touching the front face of bell-hammer extension and the play of bell hammer taken up in a direction away from the bell.

c. ADJUSTMENT. Loosen the clamping screw, hold the adjusting clamp firmly against the locking-pawl bushing, and move the adjusting clamp to engage the extension on the locking-pawl. Tighten the clamping screw making sure that the locking-pawl bushing has no end play between the shoulder on the shaft and the adjusting clamp.

175. Trip-Off Pawl Stop-Plate Adjustment

a. PREPARATION. Remove the reperforator unit from the keyboard base. Remove the base-plate cover.

b. REQUIREMENTS. There should be 0.040-inch to 0.060-inch clearance between all key-levers and the universal bar. (See fig. 109.)

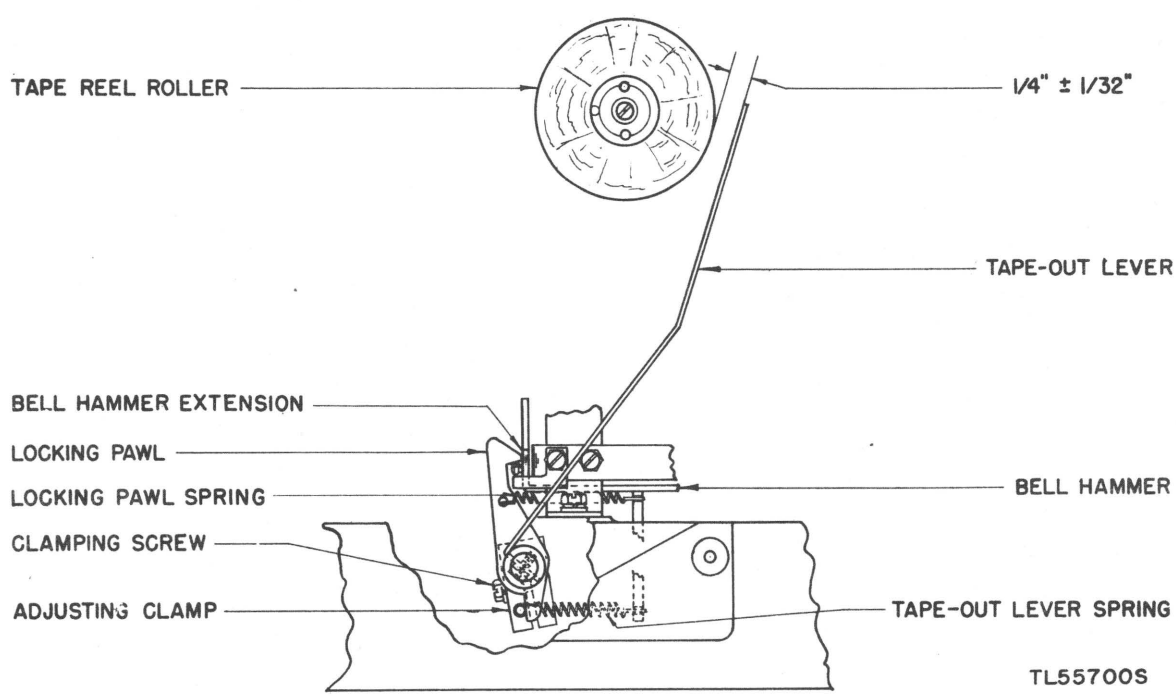

Figure 110. Tape-out lever adjusting-clamp requirements.

c. ADJUSTMENT. Loosen both trip-off pawl stop-plate nuts, move plate in desired direction so that the 0.040-inch gage can be inserted between the keylevers and the top of the universal bar and the 0.060-inch gage does not fit, retighten stop-plate nuts.

176. Gear Guard Adjustment (fig. 111)

a. PREPARATION. Remove reperforator unit from keyboard base.

b. REQUIREMENTS. There should be 0.002-inch to 0.004-inch clearance between the bell hammer and the bell operating post when the bell hammer is held in its locked position by the locking pawl.

c. ADJUSTMENT. Move the bell hammer to its locked position, loosen gear-guard mounting screws with a long screwdriver, move the guard

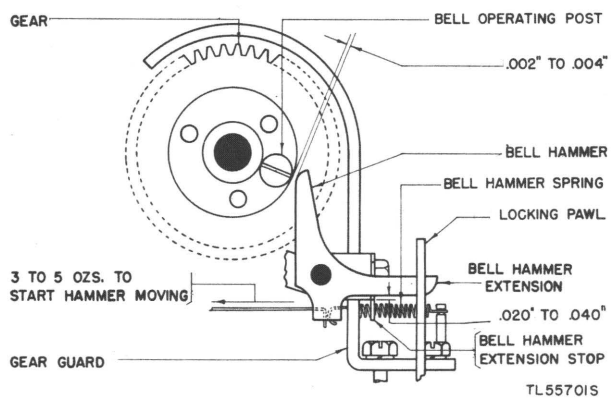

Figure 111. Gear guard adjustment.

until proper clearance is obtained between the bell hammer and the bell operating post. Retighten mounting screws.

177. Bell Adjustment (fig. 112)

a. PREPARATION. Remove the reperforator unit from the base.

b. REQUIREMENTS. Move the bell hammer to its unlocked position. There should be some clearance, but not more than 0.004-inch, between the bell hammer and the bell when the bell hammer is in the unlocked position.

c. ADJUSTMENT. Loosen the bell mounting screw, insert a 0.004-inch gage between the bell hammer and the bell. Move the bell until proper clearance has been obtained. Retighten the bell mounting screw.

178. Bell-Hammer Extension Stop Adjustment

a. PREPARATION. Remove the reperforator unit from the base.

b. REQUIREMENTS. Move the main-shaft until the locking pawl engages the bell-hammer extension. There should be 0.020-inch to 0.040-inch clearance between the lower side of the bell-hammer extension and the bell-hammer extension stop when the locking pawl is engaging the bell-hammer extension. (See fig. 111.)

c. ADJUSTMENT. Loosen the extension-stop mounting screw, insert a 0.020-inch gage between the bell-hammer extension and the bell-

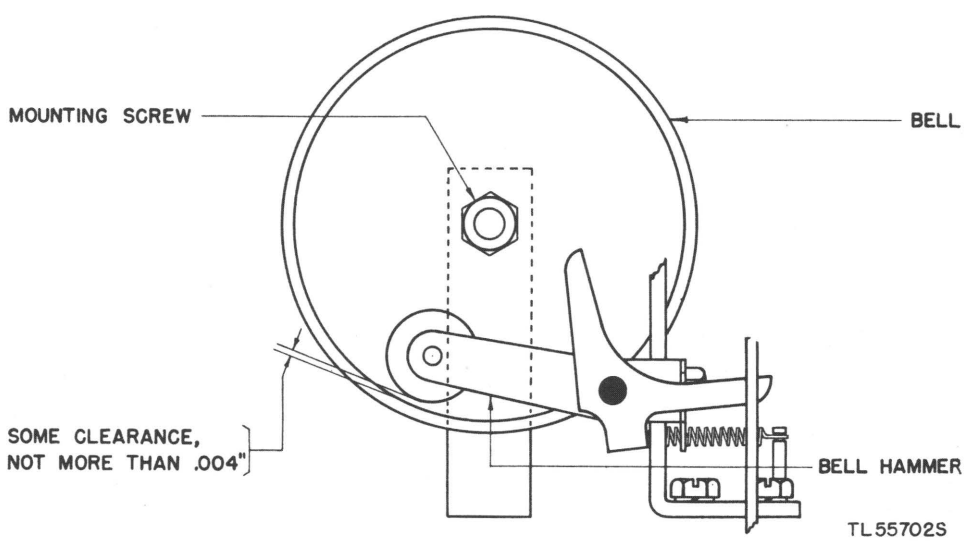

Figure 112. Bell requirements.

hammer extension stop. Move the stop until the proper clearance is obtained. Retighten the mounting screw.

179. Bell-Hammer Spring Tension Adjustment

a. PREPARATION. Remove the reperforator unit from the base.

b. REQUIREMENTS. Hook an 8-ounce scale in the spring hole, and pull horizontally away from the spring. With the bell hammer resting against the gear guard it should require 3 to 5 ounces to start the hammer moving. (See fig. 111.)

c. ADJUSTMENT. If requirement is not met, replace with a new spring.

180. Tape-Out Lever Spring Tension Adjustment

a. PREPARATION. Remove the reperforator unit from the base. Remove the locking-pawl spring.

b. REQUIREMENTS. Rotate the bell operating post out of the way. With an 8-ounce scale hooked in the spring hole of the locking pawl, and pulling toward the rear of the base at right angles to the front of the pawl, it should require 3 to 4¼ ounces to cause the locking pawl to just butt against the bell-hammer extension. (See fig. 110.)

c. ADJUSTMENT. If requirement is not met, replace with a new spring.

181. Locking-Pawl Spring Tension Adjustment (fig. 113)

a. PREPARATION. Remove the reperforator unit from the base.

b. REQUIREMENTS. With the locking pawl resting against the front face of the bell-hammer extension, hold down the tape-out lever. Hook an 8-ounce scale in the spring hole and pull in line with the spring toward the front of the unit. It should require ¼ to ¾ ounces to start the pawl moving.

c. ADJUSTMENT. If the requirement is not met, replace with a new spring.

182. Lock-Loop Spring Tension Adjustment (fig. 114)

Note: This adjustment applies to the keyboard base only.

a. PREPARATION. None required.

b. REQUIREMENTS. Rotate the transmitting shaft until the lock-loop roller is resting on the low part of its cam. Hook an 8-ounce scale in the lock-loop spring hole and pull in line with the spring. It should require from 4 to 5 ounces to start the lock loop moving.

c. ADJUSTMENT. If the requirements are not met, replace with a new spring.

183. Transmitting-Cam Cylinder Adjustment (fig. 115)

a. PREPARATION. Remove the reperforator unit from the keyboard base.

b. REQUIREMENTS. The transmitting-cam cylinder should have some end play, but not more than 0.002-inch.

c. ADJUSTMENT. Adjust the bushing in the rear bearing bracket by means of its adjusting nuts.

184. Locking-Lever Shaft Adjustment (fig. 114)

a. PREPARATION. Remove the reperforator unit from the keyboard base.

b. REQUIREMENTS. With the locking levers in the spacing position and the contact levers on the high part of their cams, there should be not less than 0.002-inch clearance between the locking levers and the contact levers when the play in the locking levers is taken up in a direction to make the clearance a minimum, and not more than 0.008-inch clearance when the play is taken up in a direction to make the clearance a maximum.

c. ADJUSTMENT. Adjust the position of the locking-lever shaft by means of its adjusting nut.

185. Locking-Lever Travel Adjustment (fig. 114)

a. PREPARATION. Remove the reperforator unit from the keyboard base.

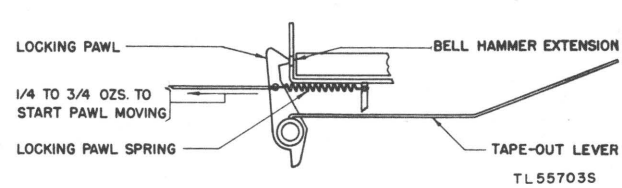

Figure 113. Locking-pawl spring tension requirements.

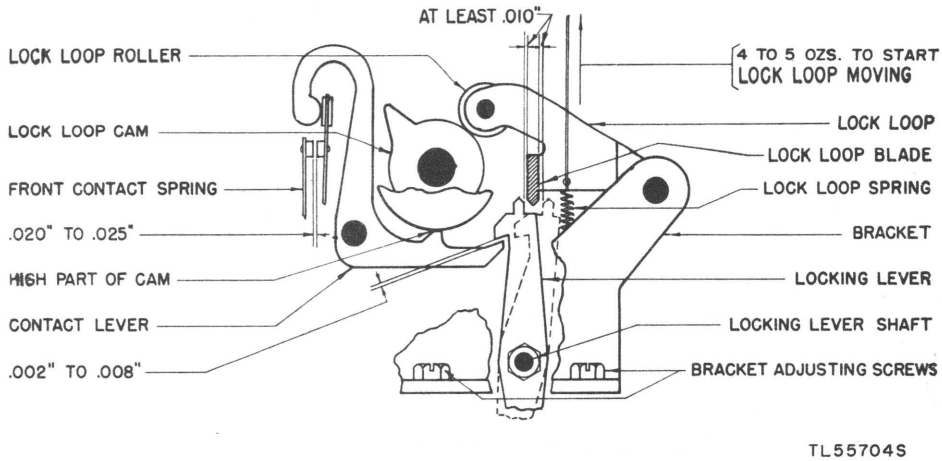

Figure 114. Lock-loop requirements.

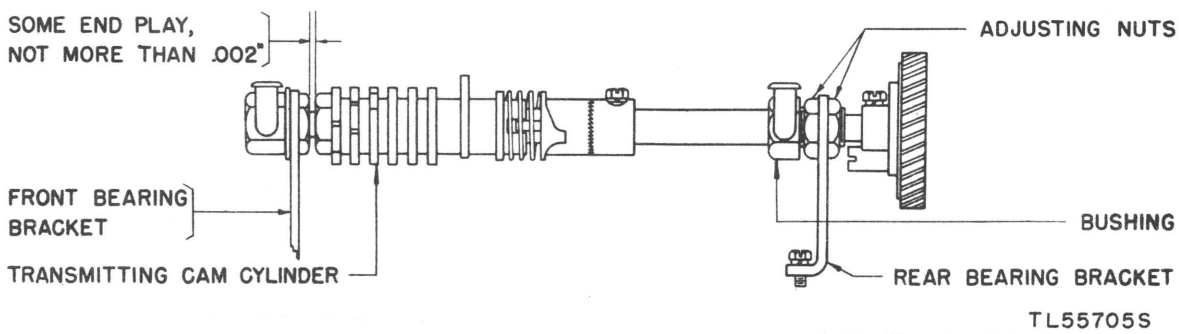

Figure 115. Transmitting-cam cylinder requirements

b. REQUIREMENTS. With the LETTERS key depressed and the lock-loop roller resting on the low part of its cam, there should be at least 0.010-inch clearance between any locking-lever finger and the lock-loop blade. Make a similar check when the BLANK key is depressed.

c. ADJUSTMENT. Loosen the four screws which hold the main bracket and shift the bracket.

186. Contact-Levers Compression Spring Adjustment (Transmitting Cam)

a. PREPARATION. Remove the reperforator unit from the keyboard base.

b. REQUIREMENTS. The compression spring between the contact levers and the front bracket should exert sufficient pressure against the contact levers to hold the contact levers where they are placed.

c. ADJUSTMENT. Check all contact levers when they are in their indents on the transmitting cam. If requirement is not met, replace with new compression springs.

187. Transmitting-Contact Gap Adjustment (fig. 114)

a. PREPARATION. Remove the reperforator unit from the keyboard base.

b. REQUIREMENTS. With each contact lever on the high part of its cam, the contact gap should be from 0.020-inch to 0.025-inch.

c. ADJUSTMENT. Bend the shorter contact spring to obtain this clearance. For the start-stop contact *only,* clearance should be 0.015-inch to 0.025-inch.

188. Transmitting-Contact Spring Pressure Adjustment (fig. 116)

a. PREPARATION. Remove the reperforator unit from the keyboard base.

b. REQUIREMENTS. With each contact lever on the low part of its cam. it should require a pressure of 4½ to 5½ ounces to open the contacts when pressing against the spring above the contact point.

c. ADJUSTMENT. Bend the longer contact spring. Recheck the contact gap adjustment.

189. Clutch Throw-Out Lever Adjustment (fig. 109)

a. PREPARATION. Remove the reperforator unit from the keyboard base.

b. REQUIREMENTS. There should be from 0.005-inch to 0.015-inch clearance between the clutch teeth when the clutch is fully disengaged.

c. ADJUSTMENT. Position the clutch throw-out lever by means of shims placed between the bearing screw and the bracket.

190. Clutch-Spring Compression Adjustment (fig. 117)

a. PREPARATION. Remove the reperforator unit from the keyboard base.

b. REQUIREMENTS. Move the clutch to its operated position. Hook a 32-ounce scale to the driven-member projection and pull directly in line with the shaft. It should require from 9 to 12 ounces to separate the clutch teeth.

c. ADJUSTMENT. If requirement is not met, replace with a new compression spring.

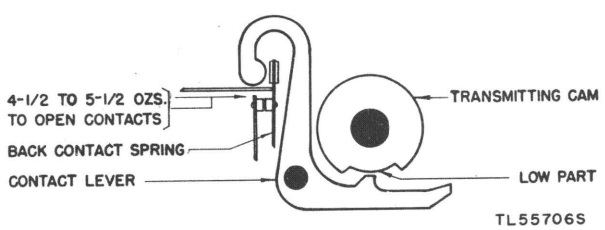

Figure 116. Transmitting-contact spring pressure requirements.

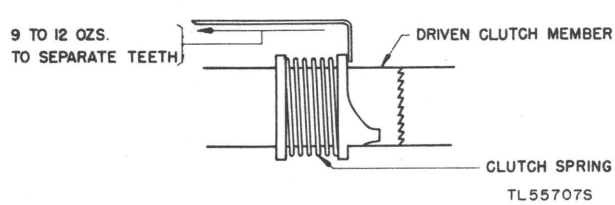

Figure 117. Clutch-spring compression requirements.

191. Lock-Loop Roller Adjustment (fig. 114)

(This adjustment applies only to keyboards equipped with a lock loop having an elongated mounting hole for roller pivot screw.)

a. PREPARATION. Remove the reperforator unit from the keyboard base.

b. REQUIREMENTS. Rotate the keyboard shaft until the clutch teeth are disengaged. Press the lock-loop roller against its cam to fully disengage the clutch teeth, and position the locking levers directly below the lock-loop blade to make the clearance a minimum. Under these conditions, there should be from 0.008-inch to 0.015-inch clearance between the lock-loop blade and the locking lever having the least clearance.

c. ADJUSTMENT. Position the roller pivot screw by utilizing its elongated mounting hole.

192. Intermediate-Pawl Eccentric Adjustment (fig. 109)

a. PREPARATION. Remove the reperforator unit from the keyboard base.

b. REQUIREMENTS. There should be from 0.050-inch to 0.060-inch clearance between the trip-off pawl and the intermediate pawl when the trip-off pawl is resting against the stop plate and the intermediate pawl is against its eccentric.

c. ADJUSTMENT. Adjust by means of the intermediate-pawl eccentric.

193. Clutch Throw-Out Lever Eccentric Adjustment (fig. 109)

a. PREPARATION. Remove the reperforator unit from the keyboard base.

b. REQUIREMENT. The intermediate pawl should be held firmly between the clutch throw-out lever and the intermediate-pawl eccentric when the clutch throw-out lever is resting on the low part of the cam.

c. ADJUSTMENT. Adjust by means of the clutch throw-out lever eccentric screw.

194. Trip-Off Pawl Eccentric Adjustment (fig. 109)

a. PREPARATION. Remove the reperforator unit from the keyboard base.

b. REQUIREMENTS. Hold the clutch throw-out lever against the outer surface of the throw-out cam of the driven member, and at the same

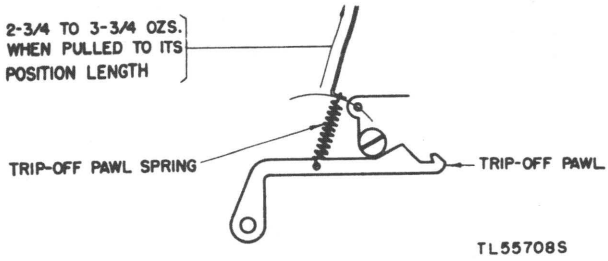

Figure 118. Trip-off pawl spring tension requirements.

time hold the clutch throw-out lever eccentric against the clutch throw-out lever. Under this condition the point on the trip-off pawl should clear the point on the intermediate pawl by not more than 0.004 inch when a keylever is being depressed.

c. ADJUSTMENT. Adjust by means of the trip-off pawl eccentric. The high part of the eccentric screw should be positioned toward the rear of the keyboard.

195. Clutch Throw-Out Lever Spring Tension Adjustment (fig. 109)

a. PREPARATION. Remove the reperforator unit from the keyboard base.

b. REQUIREMENTS. With the clutch teeth engaged and the clutch throw-out lever resting against the low part of the driven clutch member, hold the intermediate pawl against its eccentric and at the same time hook an 8-ounce scale over the throw-out lever, just above the spring hole, and pull in line with the spring. It should require 1½ to 2½ ounces to start the throw-out lever moving.

c. ADJUSTMENT. If this requirement is not met, replace with a new spring.

196. Trip-Off Pawl Spring Tension Adjustment (fig. 118)

a. PREPARATION. Remove the reperforator unit from the keyboard.

b. REQUIREMENTS. Unhook the trip-off pawl spring. Hook an 8-ounce scale in the spring eye. It should require 2¾ to 3¾ ounces to pull the spring to its normal position length.

c. ADJUSTMENT. If the requirement is not met, replace with a new spring.

197. Keylever Spring Adjustment (fig. 119)

a. PREPARATION. Remove reperforator unit from keyboard base; remove baseplate cover.

b. REQUIREMENTS. The opening between the ends of all keylever springs, excepting the spacer keylever spring, should measure 1 3/16 inches across the opening between the ends. The spacer keylever spring should measure 1 15/16 inches across the opening between the ends.

c. ADJUSTMENT. Adjust by bending the springs.

198. Slip-Connection Spring Adjustments (fig. 120)

a. PREPARATION. Remove the reperforator unit from the keyboard base.

b. REQUIREMENTS.

(1) With a suitable scale held parallel to the front edge of the front bracket on the base unit and the end of the scale held against the front post of the slip-connection terminal block, there should be a 7/16-inch to 15/32-inch space between the front post and the crimped portion of No. 16 slip-connection spring. Measure the distance from the rear post to No. 11 spring in the same manner.

(2) With a straightedge placed against the crimped portion of springs No. 11 and No. 16, there should be some clearance, but not over 0.015-inch, between the straightedge and springs No. 12 and No. 15 inclusive. There should also be a clearance not exceeding 0.015-inch between the straightedge and springs No. 17 and No. 18.

c. ADJUSTMENTS. (1) Bend springs No. 11 and No. 16.

(2) Bend the contact springs.

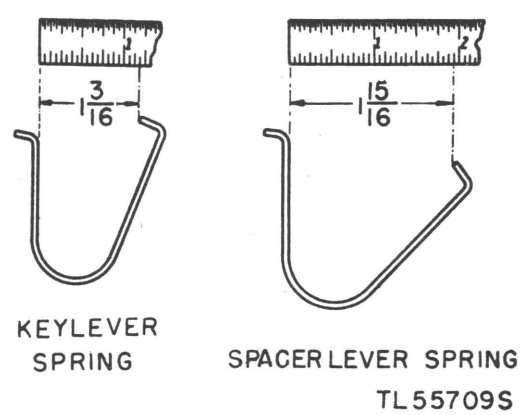

Figure 119. Keylever spring requirements.

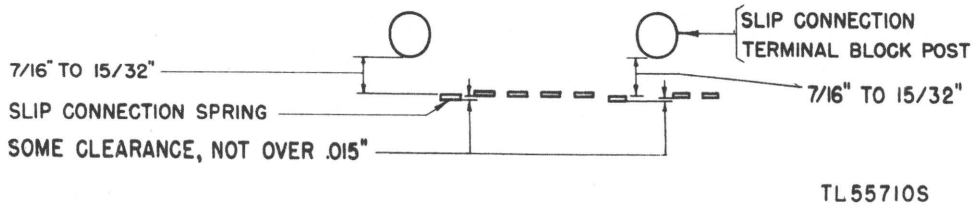

Figure 120. Slip-connection spring requirements.

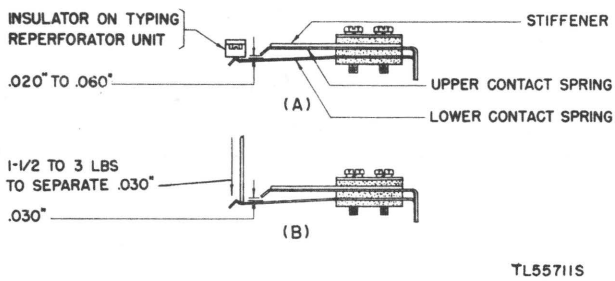

Figure 121. Line-shorting jack spring requirements.

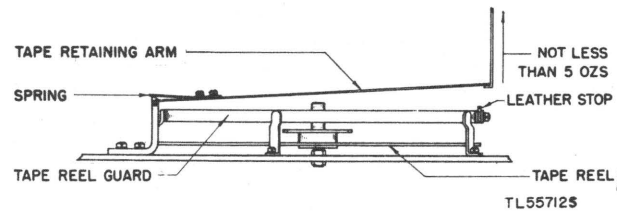

Figure 122. Tape-retaining arm spring tension requirements.

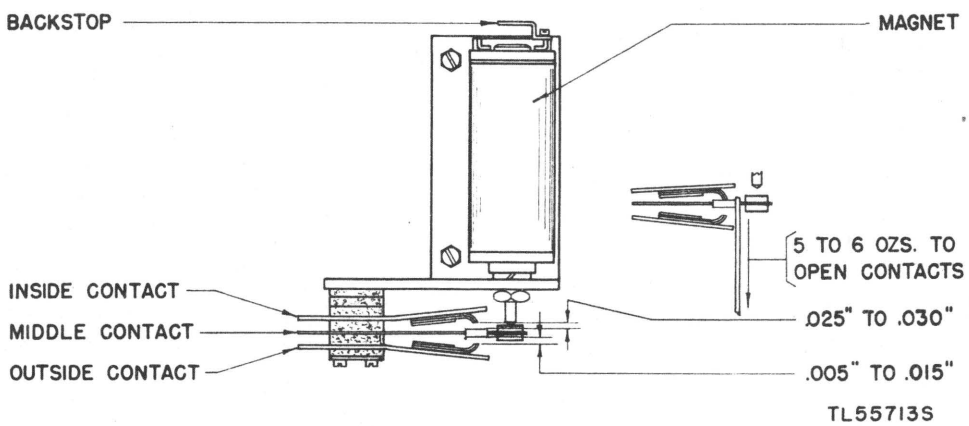

Figure 123. Contact-spring requirements for break operating.

199. Line-Shorting Jack Spring Adjustments (fig. 121)

a. PREPARATION. None required.

b. REQUIREMENTS. (1) With the typing reperforator unit in position on the base, there should be from 0.020-inch to 0.060-inch clearance between the upper and lower contact springs.

(2) With the typing reperforator unit removed from the base, apply a 12-pound scale to the top of the curved portion of the lower contact spring and push vertically downward. It should require 1½ to 3 pounds to separate the upper and lower contact springs 0.030 inch.

c. ADJUSTMENTS. (1) Bend the upper contact spring and stiffener.

(2) Bend the lower contact spring.

200. Tape-Retaining Arm Spring Tension Adjustment (fig. 122)

a. PREPARATION. None required.

b. REQUIREMENTS. With an 8-ounce scale hooked to the end of the tape-retaining arm and pulled vertically upward, it should require not less than 5 ounces to raise tape-retaining arm approximately 1 inch from its leather stop.

c. ADJUSTMENT. Adjust by bending springs not meeting requirements.

807975 O - 48 - 11

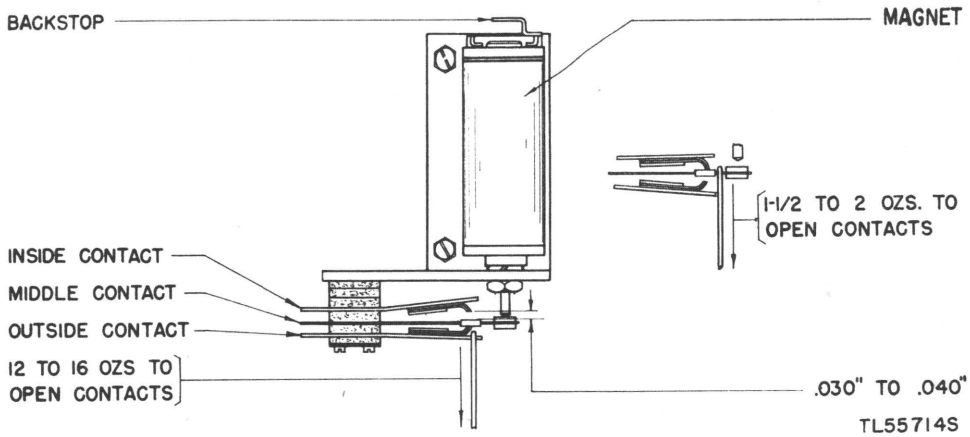

Figure 124. Contact-spring requirements for make operation

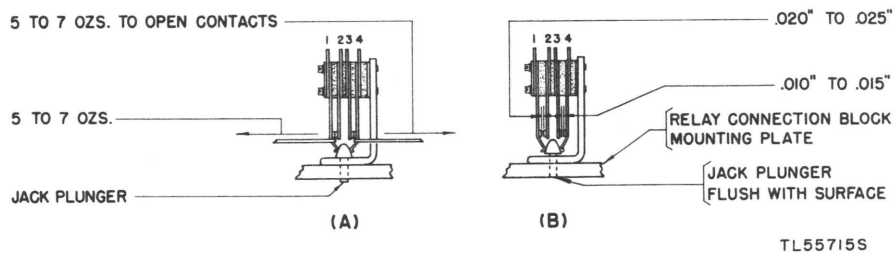

Figure 125. Line and selector circuit-closing jack contact-spring requirements.

201. Contact-Spring Adjustment for Break Operation (Control Relay) (fig. 123)

a. PREPARATION. None required.

b. REQUIREMENTS. (1) There should be a gap of 0.005-inch to 0.015-inch between the outside contact and the middle contact when the relay plunger is held operated.

(2) There should be a gap of 0.025-inch to 0.030-inch between the inside contact and the middle contact when the relay plunger is held operated.

(3) When the relay plunger is in the unoperated position, hook an 8-ounce scale over the middle contact spring at the side of the contact and pull horizontally at right angles to the contact spring. A pull of 5 to 6 ounces is required to cause the middle contact to break contact with the inside contact.

c. ADJUSTMENTS. (1) Bend the outside contact spring.

(2) Bend the inside contact spring.

(3) Bend the middle contact spring and recheck requirement number (2).

202. Contact-Spring Adjustment for Make Operation (Control Relay) (fig. 124)

a. PREPARATION. None required.

b. REQUIREMENTS. (1) With the relay plunger held operated, hook a 32-ounce scale over the end of the outside contact spring and pull horizontally at right angles to the spring; a pull of 12 to 16 ounces should cause the outside contact to just break contact with the middle contact.

(2) With the relay plunger held operated, there should be a gap of from 0.030-inch to 0.040-inch between the contact surfaces of the inside and middle contacts.

(3) With the relay plunger unoperated, hook an 8-ounce scale over the middle contact spring at the side of the contact and pull horizontally at right angles to the contact spring. It should require 1½ to 2 ounces to cause the middle contact to break contact with the inside contact.

c. ADJUSTMENTS. (1) Bend the outside contact spring.

(2) Bend the inside contact spring.

(3) Bend the middle contact spring and recheck requirement number (2).

203. Line and Selector Circuit-Closing Jack Contact-Spring Adjustments (fig. 125)

a. PREPARATION. None required.

b. REQUIREMENTS. (1) When the jack plunger is held flush with the relay connection-block mounting plate, there should be a gap of from 0.010-inch to 0.015-inch between the contact points of No. 3 and No. 4 contact springs.

(2) When the jack plunger is held flush with the relay connection-block mounting plate, there should be a gap of from 0.020-inch to 0.025-inch between the contact points of No. 1 and No. 2 contact springs.

(3) When an 8-ounce scale is hooked to contact springs No. 1 or No. 4 at right angles to the springs, it should require a pull of from 5 to 7 ounces to separate the contact points of contact springs of No. 1 and No. 2 or of contact springs No. 3 and No. 4, respectively.

c. ADJUSTMENTS. (1) Bend No. 3 contact spring.

(2) Bend No. 2 contact spring.

(3) Bend No. 1 and No. 4 contact springs.

204. Contact-Spring Position Adjustment (Tape Feed-Out Relay) (fig. 126)

a. PREPARATION. None required.

b. REQUIREMENTS. (1) The width of the contacting surface of each contact spring should be wholly within the length of the contacting surface of its mating contact spring. The maximum misalinement should not be over one-third of the width of the contacting surface.

(2) The hinge pins should not bind in the holes of the hinge bracket.

(3) The spring tangs should rest on the spool head so that the free end of the tang extends back of the front face of the spool head.

(4) The width of the spring tang should lie entirely within the projection of the top and bottom edges of the slots in the spool head, but the tang should not rub on the spool head when moved in the direction of travel of the spring from its normal position of rest on the spool head.

(5) With the spring tensions of contact springs X and No. 5 approximately equal, both legs of the armature should bear against the hinged bracket when the armature is in either the operated or the unoperated position.

c. ADJUSTMENTS. Slightly loosen the contact-spring mounting screws and position the springs and hinged brackets.

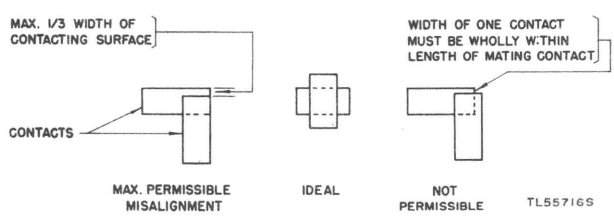

Figure 126. Contact-spring position requirements.

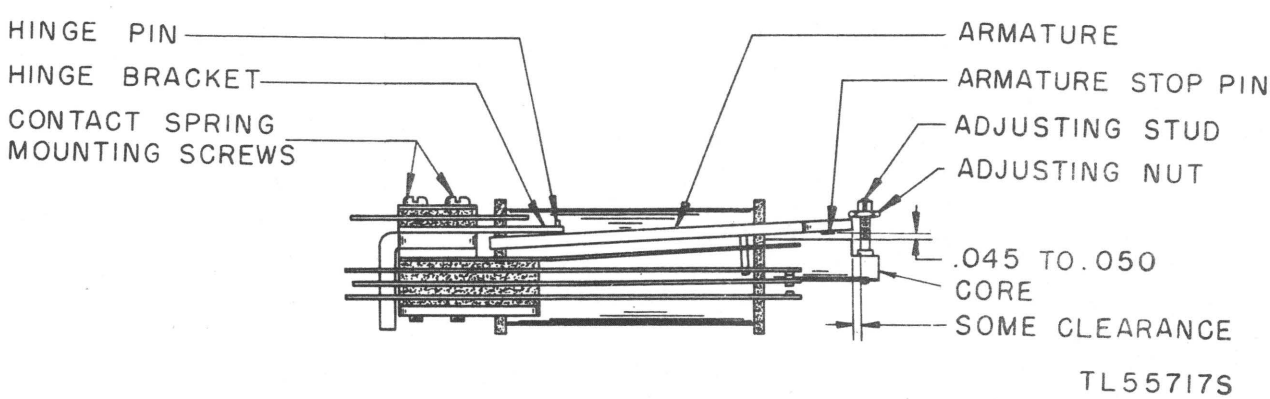

Figure 127. Adjusting-stud clearance requirements.

205. Adjusting-Stud Clearance Adjustment (Tape Feed-Out Relay) (fig. 127)

a. PREPARATION. None required.

b. REQUIREMENTS. There should be some clearance between the armature and the adjusting stud over the entire armature travel.

c. ADJUSTMENT. Bend the stud with a pair of long-nose pliers to obtain this clearance.

206. Adjusting-Nut Tightness Adjustment (Tape Feed-Out Relay) (fig. 127)

a. PREPARATION. None required.

b. REQUIREMENTS. The adjusting nut should be sufficiently tight on the stud to prevent its being readily turned with the thumb and forefinger.

c. ADJUSTMENT. Back off the adjusting nut from the adjusting stud until its slotted portion is free of the stud, then force the slotted parts of the nut closer together, using a pair of long-nose pliers.

207. Armature-Travel Adjustment (Tape Feed-Out Relay) (fig. 127)

a. PREPARATION. None required.

b. REQUIREMENTS. There should be from 0.045-inch to 0.050-inch clearance between the armature stop pins and the core.

c. ADJUSTMENT. Position by means of the adjustment nut.

208. Contact-Spring Tension Adjustment (Tape Feed-Out Relay) (fig. 128)

a. PREPARATION. None required.

b. REQUIREMENTS. (1) Contact springs X and No. 5 should be tensioned toward the armature so that the armature will be held against the adjusting nut by a pressure of 20 to 45 grams when a gram scale is applied to the back of the armature, at a point approximately midway between the points where the stop pins are located, and pushed against the tension of the contact springs.

(2) Contact springs Nos. 1, 3, and 4 should be tensioned toward the armature so that it requires a pressure of from 30 to 50 grams to start the tang of each spring moving away from the side of the slot next to the armature when the armature is held in the operated position, and a gram scale is applied to contact springs Nos. 1, 3, and 4.

(3) Contact spring No. 2 should be tensioned toward the armature so that it requires a pressure of from 20 to 40 grams to cause it to break contact with No. 3 contact.

c. ADJUSTMENTS. (1) Bend contact springs X and No. 5.

(2) Bend contact springs Nos. 1, 3, and 4.

(3) Bend contact spring No. 2.

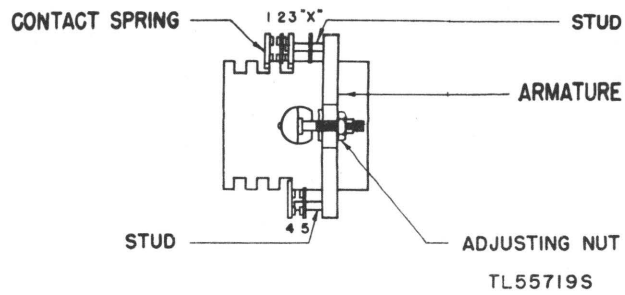

Figure 128. Contact-spring tension requirements.

209. Stud Gap Adjustment (fig. 128)

a. PREPARATION. None required.

b. REQUIREMENTS. With the armature unoperated there should be at least a 0.006-inch clearance between the end of the stud and the No. 2 contact spring.

c. ADJUSTMENT. Bend the tang of No. 3 contact spring and recheck its spring pressure.

210. Contact Sequence Adjustments (Tape Feed-Out Relay)

a. PREPARATION. None required.

b. REQUIREMENTS. On the break-make contacts of the spring combinations, the normally closed contacts should break before the normally open contacts make.

c. ADJUSTMENTS. Gage by eye. Modify the spring tensions, stud gaps, and contact adjustments as required.

211. Contact Adjustments (Tape Feed-Out Relay) (fig. 128)

a. PREPARATION. None required.

b. REQUIREMENTS. (1) With the armature in the unoperated position, both contacts of

the forked spring No. 2 should make with the contacts of spring No. 3.

(2) The make contacts of the No. 2 and No. 5 contact springs should make contact with their mating contacts on the No. 1 and No. 4 contact springs approximately simultaneously. The break contacts of the No. 2 contact springs should separate from their mating contacts on the No. 3 spring approximately simultaneously.

(3) Contact springs No. 2 and No. 5 should meet the following requirements:

(*a*) When the relay is electrically energized (with approximately 0.030 ampere of current) against a 0.016-inch gage inserted between the armature and the core, none of the make contacts on either the No. 2 or No. 5 contact springs should make contact with a mating contact on the associated No. 1 and No. 4 contact springs.

(*b*) When the relay is electrically energized (with approximately 0.030 ampere of current) against a 0.009-inch gage inserted between the armature and core; at least one of the make contacts on each of the No. 2 and No. 5 contact springs should make contact with its mating contact on the associated No. 1 and No. 4 contact springs.

(*c*) When the relay is electrically energized (with approximately 0.030 ampere of current) against a 0.005-inch gage inserted between the armature and the core, both break contacts on the No. 2 contact spring should be separated from their mating contacts on the associated No. 3 break contact spring.

c. ADJUSTMENTS. (1) Bend the contacts of spring No. 2.

(3) Bend contacts of springs No. 2 and No. 5.

(3) Bend the tangs on each of the No. 1 and No. 4 contact springs, then recheck their pressure.

212. Lock-Bar Eccentric Bushing Adjustment

a. PREPARATION. Remove the reperforator unit from the keyboard base.

b. REQUIREMENTS. With the keylevers resting against the leather upstop and the lock bar in its extreme left-hand position, the keylevers should be blocked by the projections on the lock bar and there should be at least a 0.010-inch clearance between the bottom of the keylevers and the top of the projections.

c. ADJUSTMENT. Position the eccentric bushings on which the lock bar mounts.

213. Space-Repeat Rod Adjustment (fig. 109)

a. PREPARATION. Remove the reperforator unit from the keyboard base.

b. REQUIREMENTS. There should be a 0.010-inch to 0.020-inch clearance between the clutch throw-out lever and the high part of the throw-out cam, when the space bar is held depressed by applying pressure at approximately the center of the space bar until the bar rests lightly against it downstops.

c. ADJUSTMENT. Position the adjusting nuts on the space-repeat rod.

214. Space-Repeat Rod Spring Tension Adjustment (fig. 109)

a. PREPARATION. None required.

b. REQUIREMENTS. Hold the repeat yoke unoperated. Hook an 8-ounce scale over the space

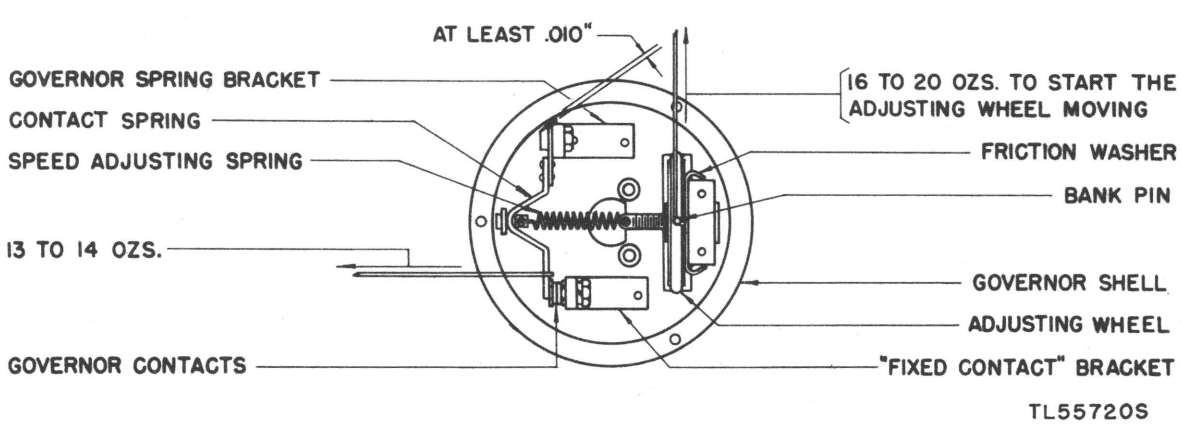

Figure 129. Governor shell requirements.

repeat rod just below the spring and pull horizontally toward the front of the keyboard. It should require ¾ to 1¾ ounces to start the rod moving.

c. ADJUSTMENT. If this requirement is not met, replace with a new spring.

215. Governor Shell Adjustment (fig. 129)

a. PREPARATION. Remove the governor-adjusting bracket and governor cover. Remove the speed-adjusting spring.

b. REQUIREMENTS. (1) The governor contact points should meet squarely and there should be at least 0.010-inch clearance between the governor spring bracket and the rim of the governor shell.

(2) There should be a gap of 0.015-inch to 0.040-inch between the governor contacts.

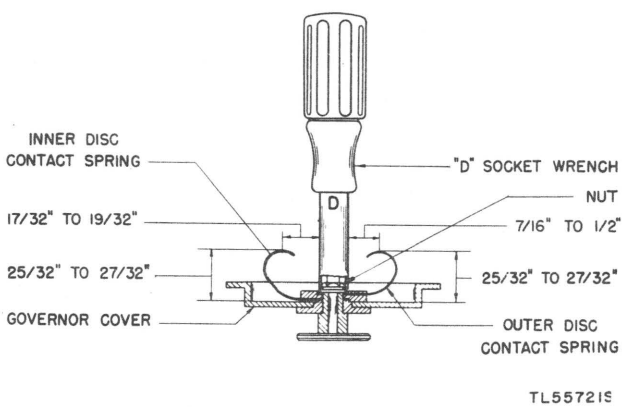

Figure 130. Inner and outer disk contact-spring requirements.

c. ADJUSTMENTS. (1) Position the governor spring bracket by means of its mounting screws. If necessary, reposition the fixed-contact bracket to facilitate squaring up the contacts.

(2) Bend the governor contact spring, and replace the speed-adjusting spring.

216. Speed-Adjusting Wheel Friction-Washer Spring Pressure Adjustment (fig. 129)

a. PREPARATION. Remove the governor adjusting bracket and governor cover.

b. REQUIREMENTS. Rotate the speed-adjusting wheel to a point where the governor contact pressure is 13 to 14 ounces, as indicated by hooking a 32-ounce scale over the contact spring next to the contact point and pulling parallel to the speed-adjusting spring. Then insert a bank pin radially in the leather rim of the speed-adjusting wheel, and hook a 32-ounce scale over the pin and pull at a tangent to the periphery of the adjusting wheel. It should require 16 to 20 ounces to start the wheel moving.

c. ADJUSTMENT. To adjust the friction, remove the friction washer and bend the large projections.

217. Inner and Outer Disk Contact-Spring Adjustments (fig. 130)

a. PREPARATION. Remove the governor cover, target, and brush spring plate.

b. REQUIREMENTS. (1) The distance from the inside surface of the governor cover to the

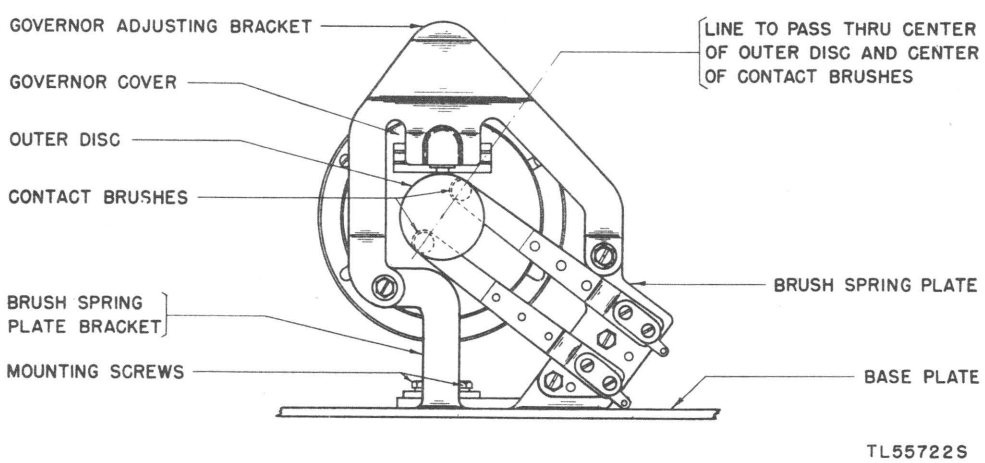

Figure 131. Governor-brush spring-plate bracket requirements

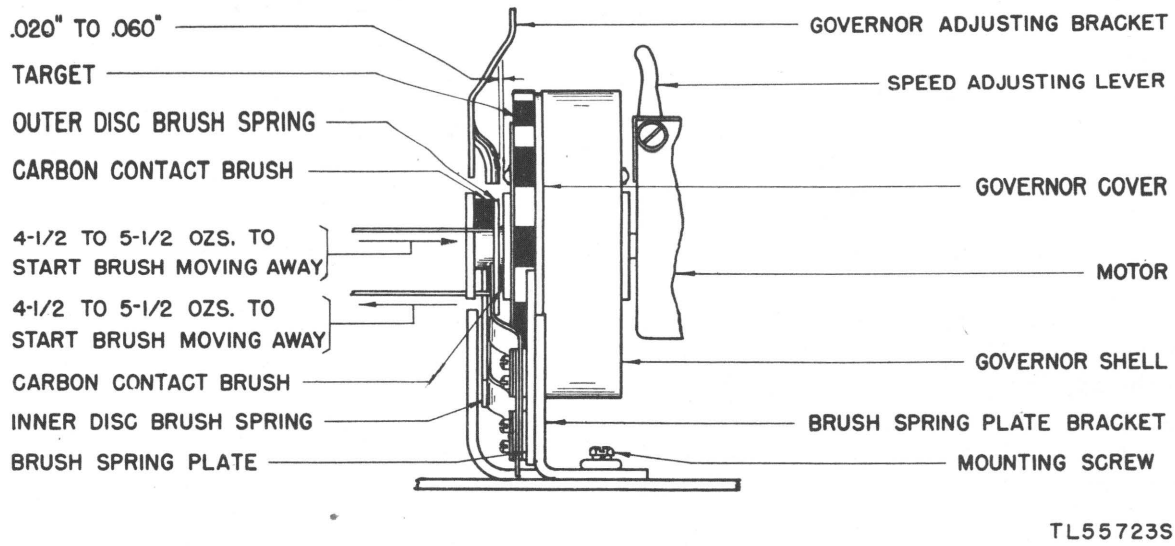

Figure 132. Governor-brush spring pressure requirements.

highest point on the contact springs should be from 25/32-inch to 27/32-inch.

(2) Place a D socket wrench over the nut, located in the center of the governor cover, that is used to hold the contact springs in place. With a 6-inch scale, measure the radial distance from the vertical surface of the wrench to the point where the scale touches the curved surface of the inner disk contact spring. This distance should be 17/32 to 19/32-inch.

(3) In a similar manner, measure the distance from the wrench to the point of contact on the outer disk contact spring. This distance should be from 7/16 to ½-inch.

c. ADJUSTMENT. Adjust by bending the contact springs. Replace the governor cover, target, and brush spring plate.

218. Governor-Brush Spring-Plate Bracket Adjustment

a. PREPARATION. None required.

b. REQUIREMENTS. (1) A line through the center of the outer disk should also pass through the centers of both contact brushes. (See fig. 131.)

(2) The surface of the brush spring-plate bracket, on which the brush spring plate is mounted, should be in alinement with the outer surface of that part of the governor cover on which the target is mounted. (See fig. 132.)

(3) The brush spring-plate bracket should be parallel to the edge of the motor-base plate.

c. ADJUSTMENTS. Adjust the brush spring-plate bracket by utilizing its mounting slots.

219. Governor-Brush Spring Pressure Adjustment (fig. 132)

a. PREPARATION. Remove the governor adjusting bracket.

b. REQUIREMENTS. (1) *Inner disk brush spring.* Hook an 8-ounce scale over the inner spring just in front of the carbon contact brush. Pulling horizontally away from the motor, it should require 4½ to 5½ ounces to start the brush moving away from the disk.

(2) *Outer disk brush spring.* Apply an 8-ounce push scale against the outer brush spring, just in front of the carbon contact brush. Pushing horizontally toward the motor, it should require 4½ to 5½ ounces to start the brush moving away from the disk.

c. ADJUSTMENT. Remove and bend the brush spring. When the springs are replaced and the pressure obtained, take care that the contact brushes lie flat against their respective disks, and that the outer edges of the brushes are either flush with, or not more than 3/64-inch inside, the outer edges of the disks. Replace the governor adjusting bracket.

220. Governor Adjusting Bracket Adjustment (fig. 132)

a. PREPARATION. None required.

b. REQUIREMENTS. The adjusting surface of the governor adjusting bracket should clear

the speed-adjusting wheel by 0.020-inch to 0.060-inch.

c. ADJUSTMENT. Clearance is gained by bending the governor adjusting bracket.

221. Governor Shim Adjustments (fig. 132)

a. PREPARATION. None required.

b. REQUIREMENTS. There should be at least a 0.006-inch clearance between the adjusting-lever wearing strip and the adjusting wheel when the adjusting wheel is opposite the wearing strip and the play of the armature is taken up in a direction to make this clearance a minimum by overcoming the armature end thrust spring.

c. ADJUSTMENT. Install shims on the armature shaft between the governor hub and the end frame casting.

222. Main-Shaft Clutch Spring Tension Adjustment (fig. 133)

a. PREPARATION. Remove reperforator unit from the base and place in position on its back.

b. REQUIREMENTS. With the teeth of the driven clutch member resting against the teeth of the driving member but not engaged, hook a 32-ounce scale over the throw-out cam on the driven clutch member and pull as nearly in line with the shaft as possible. It should require 24 to 30 ounces to separate the clutch teeth.

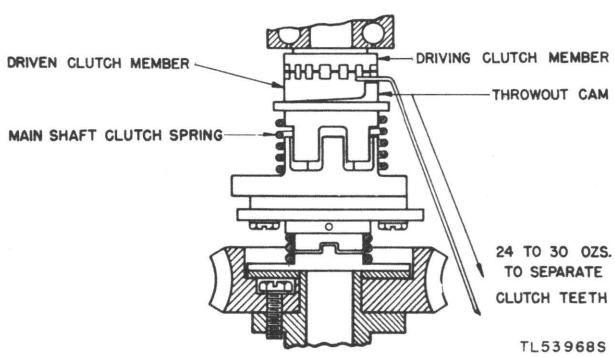

Figure 133. Main-shaft clutch spring tension requirements.

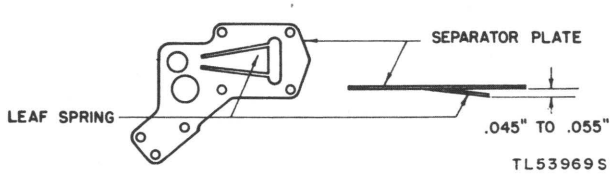

Figure 134. Selector separator plate requirements.

c. ADJUSTMENT. If the requirement is not met, replace with a new spring.

223. Selector Separator Plate Adjustment (fig. 134)

a. PREPARATION. None required.

b. REQUIREMENTS. The leaf springs should exert a light pressure against the swords. This requirement should be checked only if the selector is dismantled for repair.

c. ADJUSTMENT. Bend the leaf springs at the narrow portions so that the ends of the springs are 0.045-inch to 0.055-inch below the under surface of the straight portions. *Be very careful in removing and replacing the selector lever springs to guard against distorting them. The subsequent selector adjustments will be facilitated if the swords and selector levers are replaced in the identical location they formerly occupied.*

224. Main-Shaft Adjustment (fig. 135)

a. PREPARATION. None required.

b. REQUIREMENTS. Rotate the selector-cam sleeve at least one complete revolution. The cams on the selector-cam sleeve should line up with their associated selector levers.

c. ADJUSTMENT. Loosen the four screws that hold the main-shaft bearing brackets. Set the position of the main shaft so that the requirement is met. Retighten the screws.

225. Main-Shaft Clutch Throw-Out Lever Adjustment (fig. 135)

a. PREPARATION. None required.

b. REQUIREMENTS. The clutch throw-out lever should be free on its bearings with no perceptible end play and there should be from 0.010-inch to 0.020-inch clearance between the ends of the clutch teeth when the members are fully disengaged.

c. ADJUSTMENT. Position the clutch throw-out lever upper pivot screw and adjust the lower pivot screw so that the clutch throw-out lever is free with no perceptible end play when the pivot-screw locknuts are tightened.

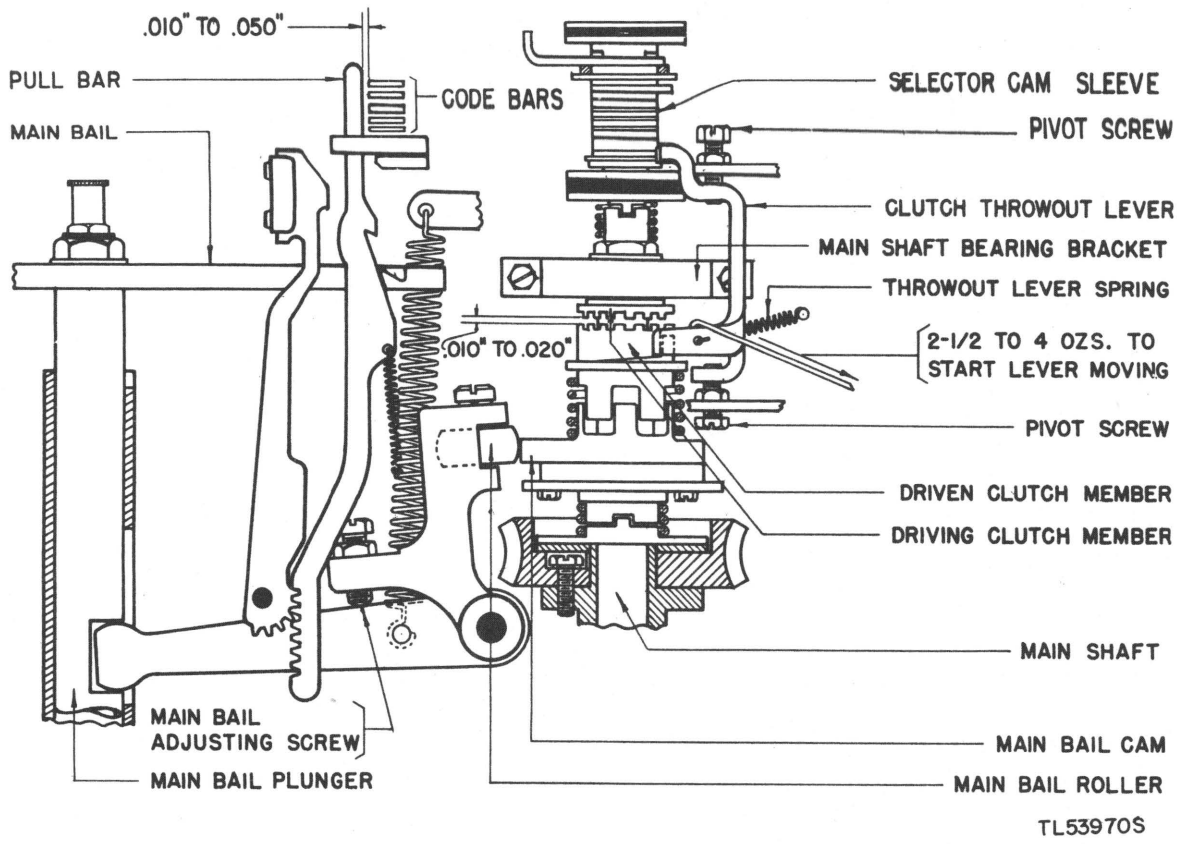

Figure 135. Main-shaft requirements.

226. Main-Shaft Clutch Throw-Out Lever Spring Tension Adjustment (fig. 135)

a. PREPARATION. None required.

b. REQUIREMENTS. Rotate shaft until clutch throw-out lever rests against the lower surface of the driven clutch member. Hook an 8-ounce scale over the clutch throw-out lever at the spring hole and pull horizontally at right angles to the clutch throw-out lever. It should require 2½ to 4 ounces to start the lever moving.

c. ADJUSTMENT. If requirement is not met, replace with a new spring.

227. Motor Position Adjustment

a. PREPARATION. None required.

b. REQUIREMENT. There should be a barely perceptible amount of backlash between the motor pinion and the highest point on the main-shaft gear. Check this backlash throughout a complete revolution of the main shaft.

c. ADJUSTMENT. Position the motor by means of the motor mounting screws.

228. Selector-Armature Bracket Link Friction Adjustment

a. PREPARATION. Remove the selector-armature link screw.

b. REQUIREMENTS. With an 8-ounce scale hooked in the link screw hole and pulled at right angles to the link, it should require a tension of not over 8 ounces to start the link moving.

c. ADJUSTMENT. Remove the link and adjust the slotted end to obtain this friction. Replace the link and screw.

229. Selector-Lever Spring Tension Adjustment (Pulling Magnet) (fig. 136)

a. PREPARATION. None required.

b. REQUIREMENTS. Rotate the shaft until all the code bars are in the mark position and the main bail is in its highest position. Move the swords manually to the spacing position. Hook a 32-ounce scale over the end of each selector

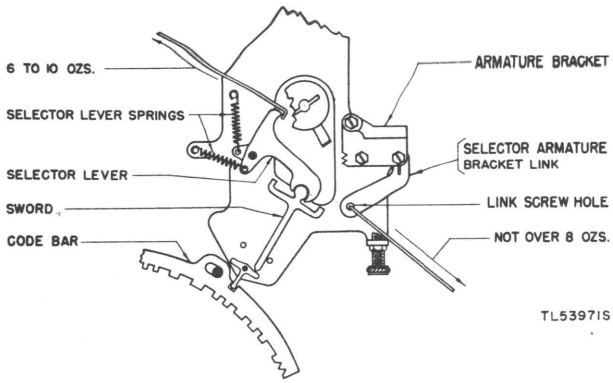

Figure 136. Selector-armature bracket link friction requirements.

lever at the selector-cam sleeve and pull radially to the main shaft. It should require 6 to 10 ounces to start each selector lever moving.

c. ADJUSTMENT. If this requirement is not met, replace with a new spring.

230. Selector-Armature Adjustment (fig. 137)

a. PREPARATION. None required.

b. REQUIREMENTS. The armature should be free on its pivot screws, with barely perceptible end play. There should be some clearance, but not more than 0.008-inch, between the lower surface of the armature locking wedge and the No. 1 sword, under the following conditions:

(1) No. 1 selector lever resting on the peak of its cam.

(2) No. 1 sword held against the upper separator plate without bending the latter.

(3) Armature end play taken up in a direction to reduce the specified clearance to a minimum.

c. ADJUSTMENTS. If there is no clearance between the armature locking wedge and the No. 1 sword, loosen the locknut on the upper pivot screw and adjust to obtain clearance, noting that a quarter-turn of the screw is equivalent to approximately 0.006-inch. Remove the armature bracket and adjust the lower pivot screw to obtain the proper armature end play. Replace the armature bracket. If there is more than 0.008-inch clearance, remove the armature bracket and adjust the lower pivot screw. Replace the bracket and adjust the armature end play by means of the upper pivot screw.

231. Selector-Armature Bracket Link Adjustment (figs. 138 and 139)

a. PREPARATION. Unhook the locking-lever spring, loosen the magnet-bracket mounting screws, and move the bracket to its rearmost position. Loosen the armature-bracket mounting screw, the link screw, and back off the armature stops. Move the armature-bracket eccentric out of the way so that it will not interfere with the adjustment.

b. REQUIREMENTS. Rotate the main shaft until the No. 1 selector lever rests on the peak of its cam. The position of the armature bracket should be such that a line through the center of the No. 1 sword extends approximately through the centers of the armature pivot screws when the swords are held midway between the stop posts by means of the 72581 gage pins.

c. ADJUSTMENT. Hold the swords in a position midway between the two stop posts by

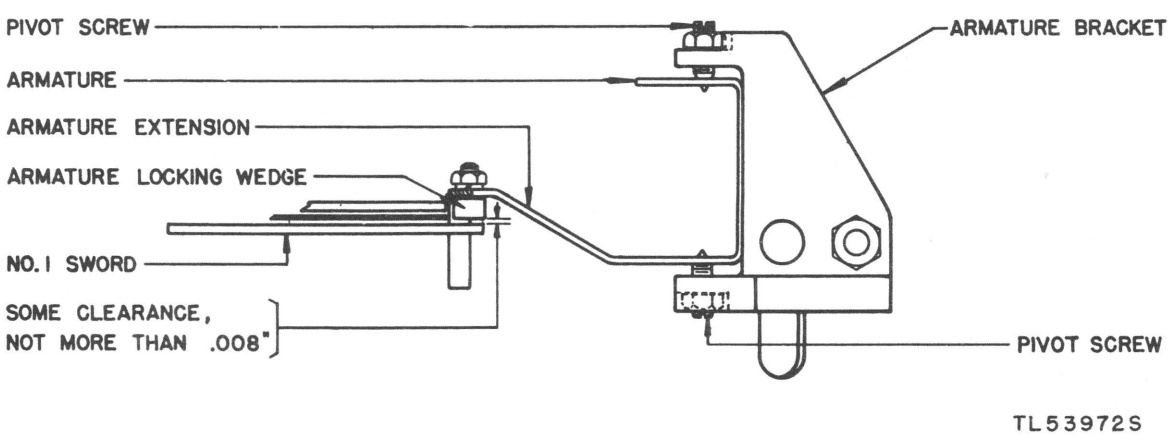

Figure 137. Selector-armature requirements.

means of the 72581 gage pins inserted between the stop posts and the swords. Be sure that both the armature extension arms are between the sword arms. With the swords held in this position, place the 73370 locating gage over the end of the No. 1 sword so that the two legs of the gage are against the ends of the sword arms. Move the bracket to a position where both armature extension arms are against the flat surface between the legs of the gage. Hold the bracket in this position and tighten the link screw *only*. Remove the locating gage and the two gage pins.

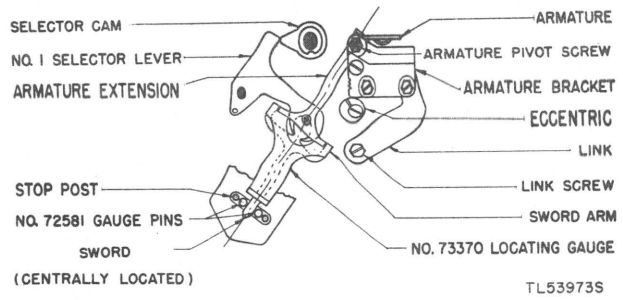

Figure 138. Selector-armature bracket link

232. Selector-Armature Bracket Adjustment

a. PREPARATION. Same as for paragraph 231 except for those parts pertaining to the link screw.

b. REQUIREMENTS. The position of the armature bracket should be such as to provide some clearance, but not more than 0.040-inch, between each sword and either stop post under the following conditions: Rotate the main shaft until the No. 1 selector lever is resting on the peak of its cam. With the armature in its unoperated (spacing) position, move the spacing arm of the No. 1 sword against the armature extension. Place a 0.40-inch gage against the spacing stop post and move the armature slowly toward the marking position. The blade of the sword should strike the 0.040-inch gage before the armature leaves the spacing arm of the sword. Under these conditions the armature will move the sword to within not more than 0.040-inch of the stop post. Remove the 0.040-inch gage and repeat the above procedure. The armature should leave the spacing arm of the sword before the blade of the sword strikes the spacing stop post. Under these conditions there will be some clearance between the sword and the stop post. Unhook the armature spring at its adjusting screw, and with the armature in its operated (marking) position, move the marking arm of the No. 1 sword against the armature extension. Then rotate the armature slowly toward the spacing position until the armature just leaves the marking arm of the No. 1 sword. Check the clearance between the No. 1 sword and the marking stop post in the same manner as described in the foregoing. With each selector lever on the peak of its cam, each associated sword should be tried for the foregoing requirement of some clearance, but not more than 0.040-inch, between each sword and the stop posts.

c. ADJUSTMENT.

(1) Tighten the armature-bracket mounting screws just enough so that the bracket may be moved by tapping it lightly. By rotating the bracket on its pivot, the clearance between the sword and the stop posts may be regulated. If this clearance is more than 0.040-inch, move the bracket in a direction to bring the armature toward the sword. If there is no clearance, move the bracket in the opposite direction to bring the armature away from the sword.

(2) If the clearance between the sword and one stop post is close to zero and the clearance between the sword and the other stop post is more than 0.040-inch, it will be necessary to refine the selector-armature bracket link adjustment (par. 231) as follows: Loosen the armature-bracket mounting screws and the armature link screw and move the armature bracket to the right or left so that the rear end of the link will move in the direction corresponding to the post at which a greater clearance is desired; that is, if the clearance between the sword and the right stop post is less than that between the sword and the left stop post, move the bracket to the right. Tighten the link screw and proceed to adjust the armature bracket according to the preceding paragraph. After the bracket is set and both screws are tightened, move the bracket eccentric against the bracket and tighten the screw. The eccentric and link will, thereafter, determine the position of the bracket. The bracket may be removed by simply removing the two bracket mounting screws. In replacing, hold the bracket against the eccentric stop while tightening the two bracket mounting screws.

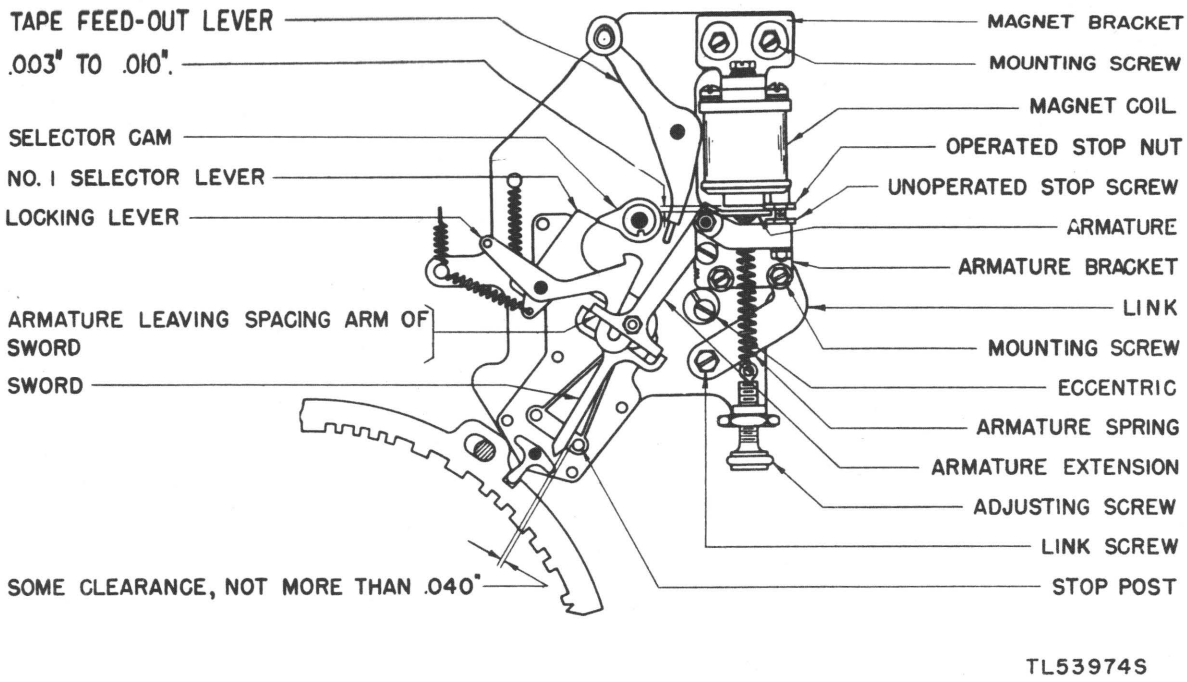

Figure 139. Selector-armature bracket requirements.

233. Armature Stop Adjustment (fig. 140)

a. PREPARATION. See paragraph 231.

b. REQUIREMENTS. The No. 1 sword arms (right and left) should clear the associated arms of the armature extensions by 0.040-inch to 0.042-inch when the front edge of the opposite sword arm is against its armature extension arm and the No. 1 selector lever is on the high part of its cam.

c. ADJUSTMENT. To adjust the clearance of the right arm, reposition the unoperated stop screw with the armature in its unoperated position. To adjust the clearance of the left arm, reposition the operated stop nut with the armature in its operated position. If either clearance is changed, recheck clearance of the other arm.

Caution: BE SURE THAT THE STOP NUT IS TIGHT ON ITS SCREW. PINCH THE HUB IF THE NUT IS LOOSE.

234. Armature Locking-Wedge Adjustment (Pulling Magnet Selector) (fig. 141)

a. PREPARATION. None required.

b. REQUIREMENTS. Move the locking lever to the high part of its locking cam. There should be a 0.008-inch to 0.012-inch clearance between the point of the armature locking wedge and the point of the locking lever when the two points are in line and the locking lever is on the high part of the locking cam.

c. ADJUSTMENT. Position the locking wedge forward or backward in its slot in the armature extension by means of the locking wedge locknut.

235. Armature Locking-Lever Spring Tension Adjustment (Pulling Magnet Selector) (fig. 141)

a. PREPARATION. Move the locking lever to the high part of its cam. Hook a 32-ounce scale in the spring hole of the locking lever and pull in line with the spring.

b. REQUIREMENTS. It should require 10 to 14 ounces to start the lever moving.

c. ADJUSTMENT. If this requirement is not met, replace with a new spring.

236. Stop-Lever Eccentric Stud Adjustment (Pulling Magnet Selector) (fig. 142)

a. PREPARATION. Remove the range-finder assembly.

b. REQUIREMENTS. The stop lever on the range-finder assembly should overtravel the

latching surface of the trip latch by from 0.004-inch to 0.006-inch.

c. ADJUSTMENT. Adjust the stop-lever eccentric stud to obtain this overtravel, making certain that the tightening of the eccentric stud nut does not disturb the adjustment. Replace the range-finder assembly. (See note in par. 238.)

237. Stop-Lever Spring Tension Adjustment (Pulling Magnet Selector) (fig. 143)

a. PREPARATION. Remove the range-finder assembly.

b. REQUIREMENTS. Hook an 8-ounce scale at the end of the stop lever on the range-finder assembly while holding the trip-latch plunger operated. It should require ¾ to 1¼ ounces to start the lever moving. Make certain that the stop-lever eccentric stud has been adjusted before checking this requirement.

c. ADJUSTMENTS. If this requirement is not met, replace with a new spring. Replace the range-finder assembly. (See note in par. 238.)

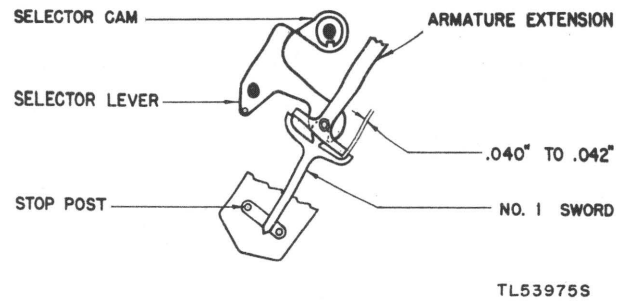

Figure 140. Armature stop requirements.

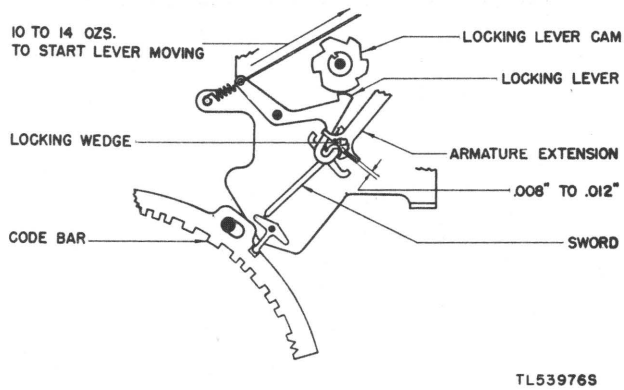

Figure 141. Armature locking-wedge requirements.

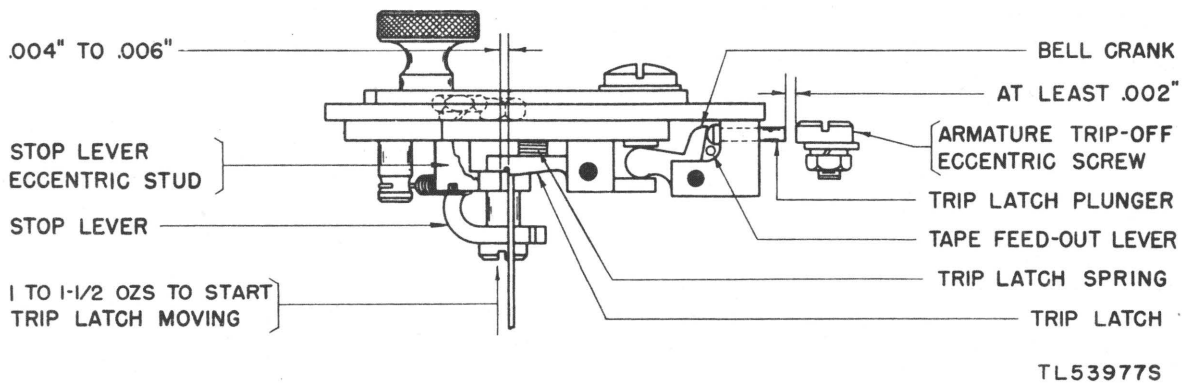

Figure 142. Stop-lever eccentric stud requirements.

238. Trip-Latch Spring Compression Adjustment (Pulling Magnet Selector) (fig. 142)

a. PREPARATION. Remove the range-finder assembly.

b. REQUIREMENTS. When measuring this requirement, hold the range-finder assembly in a horizontal position. Hold an 8-ounce scale in a vertical position and apply to the step of the trip latch. It should require from 1 to 1½ ounces when pushing upwards to start the trip latch moving.

c. ADJUSTMENTS. If this requirement is not met, replace with a new spring. REPLACE THE RANGE-FINDER ASSEMBLY TAKING CARE THAT THE TAPE FEED-OUT LEVER FITS UNDER THE LEFT END OF THE TRIP-LATCH PLUNGER. AVOID JAMMING THE TRIP-LATCH PLUNGER AGAINST THE ARMATURE TRIP-OFF ECCENTRIC SCREW WHEN REMOUNTING.

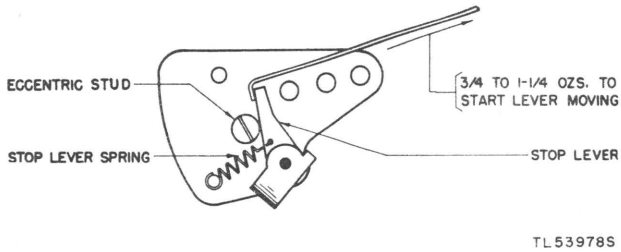

Figure 143. Stop-lever spring tension requirements.

239. Tape Feed-Out Lever Adjustment

a. PREPARATION. None required.

b. REQUIREMENTS. The tape feed-out lever should be free to rotate with a minimum amount of end play.

c. ADJUSTMENT. Position the tape feed-out lever adjusting collar by means of its setscrew. This collar is located immediately under the tape feed-out lever.

240. Armature Trip-Off Eccentric-Screw Adjustment (fig. 144)

a. PREPARATION. None required.

b. REQUIREMENTS. There should be some clearance, but not more than 0.002-inch, between the stop lever and the trip latch when the armature is in the unoperated position and the main shaft is rotated until the stopping edge of the stop is directly below the latching surface of the trip latch.

c. ADJUSTMENT. Adjust by means of the armature trip-off eccentric screw.

Note. When the stop lever is against its eccentric stud and the armature is attracted, the trip-latch plunger should have at least 0.002-inch end play; if the plunger does not have end play under these conditions, it may be taken as an indication that the trip-off screw or the selector-magnet bracket is not properly adjusted.

241. Selector-Magnet Coil Adjustment

a. PREPARATION. None required.

b. REQUIREMENTS. The top edge of the core of the upper magnet coil should aline within 1/64 inch with the top edge of the armature.

c. ADJUSTMENT. Adjust by means of the magnet coil mounting screws.

242. Selector-Magnet Bracket Adjustment (Pulling) (fig. 139)

a. PREPARATION. None required.

b. REQUIREMENTS. There should be from 0.002-inch to 0.007-inch clearance between each magnet core and the armature antifreeze strip when the magnet coils are energized with approximately 0.060 ampere of current and the armature is against the operated stop nut (marking stop). (This clearance should be 0.003 inch to 0.010-inch when a chromium-plated armature is used.) The sides of the cores should aline with the edge of the armature and the end of the cores should be parallel to the face of the armature. THIS CLEARANCE SHOULD BE 0.003-INCH TO 0.010-INCH WHEN A CHROMIUM-PLATED ARMATURE IS USED.

c. ADJUSTMENT. Adjust by means of the bracket mounting screws.

243. Armature Pivot-Screw Adjustment (fig. 145)

a. PREPARATION. Remove the range-finder assembly.

b. REQUIREMENTS. Unhook the armature spring and the selector-arm spring. The armature should be free on its pivots, with barely perceptible end play.

c. ADJUSTMENT. Adjust by means of the upper pivot screw.

244. Selector-Magnet Adjustment (fig. 146)

a. PREPARATION. Remove the range-finder assembly and the selector-magnet bracket.

b. REQUIREMENTS. The armature, when in its operated position, should touch both magnet cores at approximately the centers of their pole faces, and the cores should be centrally located with respect to the armature as gaged by eye when holding a light background behind the magnet and armature assembly.

c. ADJUSTMENT. Remove the selector magnet bracket from the reperforator unit and reposition the magnet core assembly by means of its mounting screws while holding the assembly so that the cores are vertical and the armature, by its own weight, rests against the pole faces. Replace the range-finder assembly and the selector-magnet bracket.

Note. When the cores are in proper adjustment it should require at least 3½ pounds applied at right angles to the armature edge mid-way between the cores to separate the armature from the cores when a current of 0.020 ampere is flowing through the magnet coils (coils in series shunted by 5,000 ohms resistance).

245. Selector-Arm Pivot-Screw Adjustment (figs. 147 and 148)

a. PREPARATION. Remove the range-finder assembly. Unhook the armature spring, the selector-arm spring, and the selector-arm stop detent spring.

b. REQUIREMENTS. The selector arm should be free on its pivots with barely perceptible end play, and the locking lever should overtravel the top and bottom edges of the locking wedge. There should also be a minimum clearance of 0.008 inch between the selector arm and the armature, and a minimum clearance of 0.010 inch between the selector arm and the selector-arm stop detent when the play in the detent is taken up in a direction to make this clearance a minimum.

c. ADJUSTMENTS. The end play may be adjusted by means of the upper pivot screw. If the minimum clearance requirements are not met, remove the selector-magnet bracket and the selector-arm bracket and adjust both pivot screws of the selector arm. Replace the selector-magnet bracket and the selector-arm bracket. Test and replace the armature spring, the selector-arm spring, and the selector-arm stop detent spring.

246. Selector-Arm Bracket Adjustment (fig. 148)

a. PREPARATION. Remove the range-finder assembly.

b. REQUIREMENTS. The position of the selector-arm bracket should be such as to provide some clearance, but not more than 0.040 inch, between each sword and either stop post, under the following conditions: Remove the locking-lever spring, the armature spring, and the selector-arm spring. Rotate the main shaft until

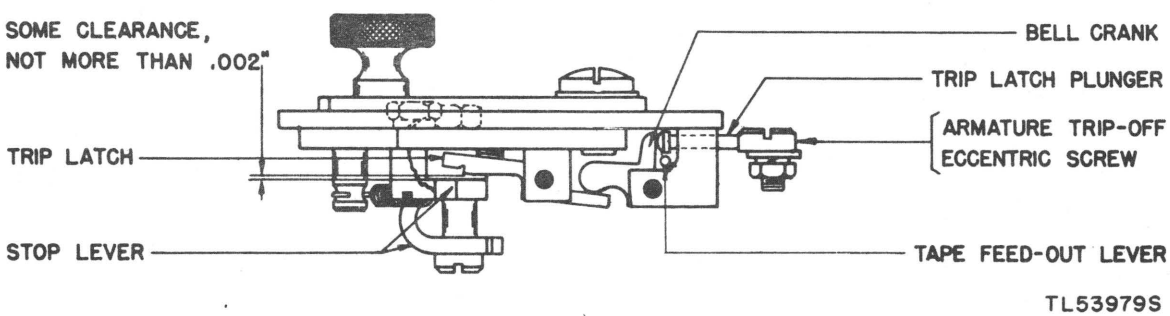

Figure 144. Armature trip-off eccentric-screw requirements.

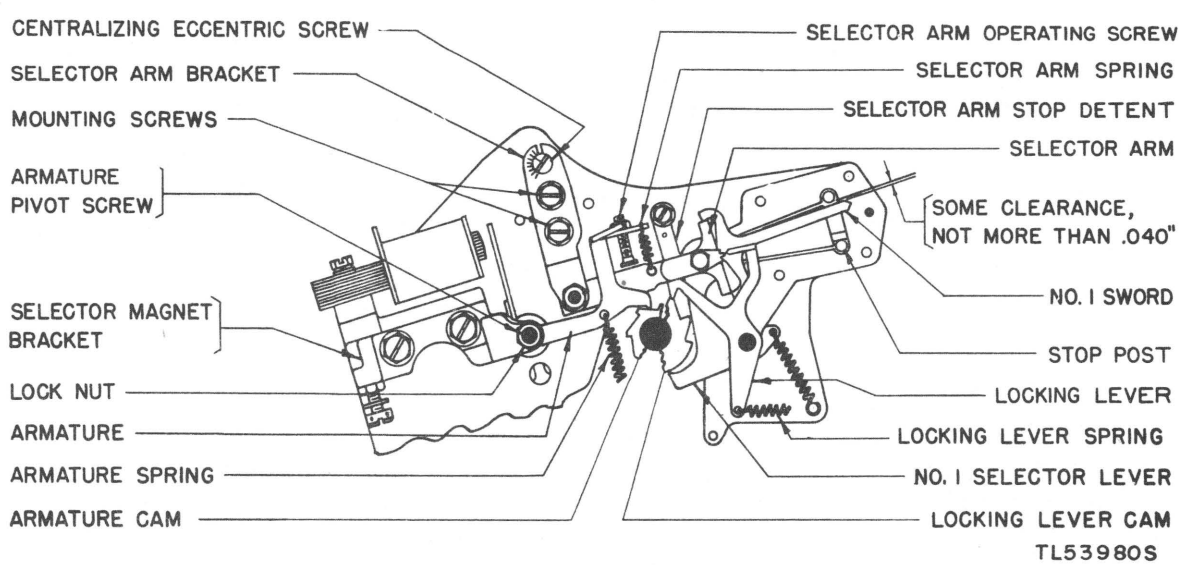

Figure 145. Armature pivot-screw requirements.

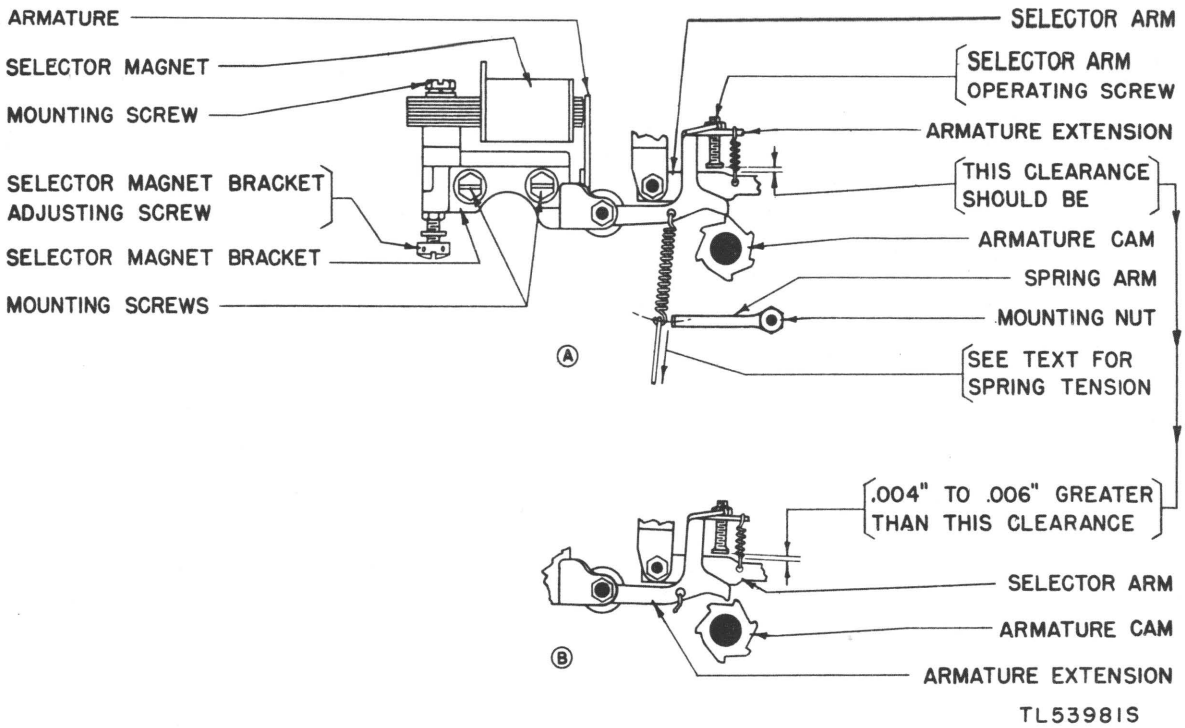

Figure 146. Selector-magnet requirements.

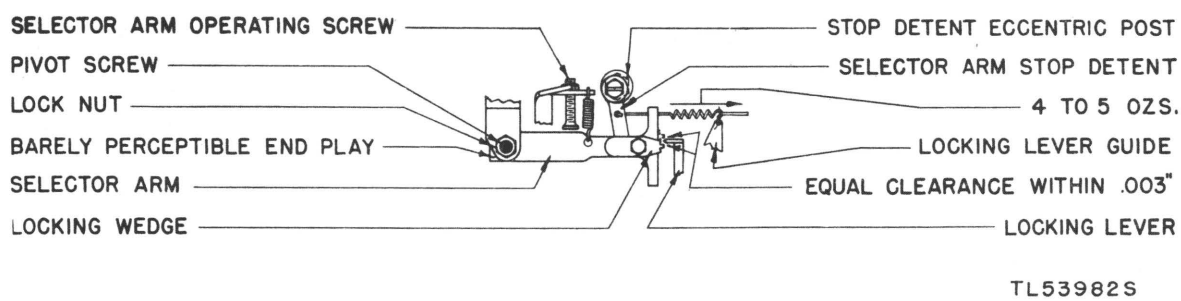

Figure 147. Selector-arm pivot-screw requirements.

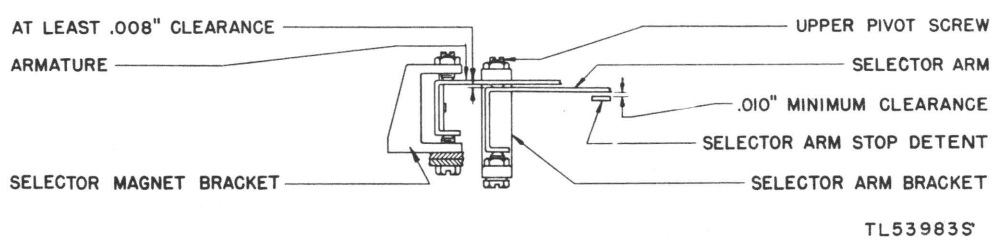

Figure 148. Selector-arm bracket requirements.

the No. 1 selector lever is resting on the peak of its cam. With the selector arm in its unoperated (spacing) position, move the spacing arm of the No. 1 sword against the selector-arm extension. Then rotate the selector arm slowly toward the marking position until the selector arm just leaves the spacing arm of the No. 1 sword. There should be some clearance, but not more than 0.040 inch, between the No. 1 sword and the spacing stop post. Unhook the armature spring at the spring arm and, with the selector arm in its operated (marking) po-

sition, move the marking arm of the No. 1 sword against the selector-arm extension. Then rotate the selector arm slowly toward the spacing position until the selector arm just leaves the marking arm of the No. 1 sword. There should be some clearance, but not more than 0.040 inch, between the No. 1 sword and the marking stop post. With each selector lever on the peak of its cam, each associated sword should be tried for the foregoing requirement of some clearance, but not more than 0.040 inch.

c. ADJUSTMENT. Loosen the selector-arm bracket mounting screws just enough to make the bracket frictiontight. Then, to equalize the clearance between the swords and the stop posts, loosen the centralizing eccentric-screw locknut and turn the eccentric screw clockwise to provide more clearance on the spacing side or counterclockwise to provide more clearance on the marking side. *BE SURE THAT THE SELECTOR ARM STOP DETENT DOES NOT INTERFERE WITH THE ADJUSTMENT.* The centralizing eccentric screw should always be located so that its indicating line is adjacent to the marked scale that has been provided on the bracket to aid in gaging the amount the screw must be turned. Tighten the locknut when the selector-arm has been centralized. To obtain the requirement of some clearance, but not more than 0.040 inch, between the swords and the stop posts, insert the 90783 adjusting wrench in one of the two holes provided and turn the wrench to move the bracket closer to or farther from the swords, as required; then tighten the selector-arm bracket mounting screws. Replace the locking-lever spring, selector-arm spring, and armature spring.

247. Locking-Wedge Adjustment (Holding Magnet Selector) (fig. 149)

a. PREPARATION. Remove the range-finder assembly.

b. REQUIREMENTS. With the locking lever on a high part of its cam, the right end of the locking wedge should clear the locking lever by from 0.006 inch to 0.010 inch when the end of the wedge is held in line with the locking lever.

c. ADJUSTMENT. Loosen the locking-wedge mounting screw and position the locking wedge in its guide; then tighten the mounting screw. Remount the range-finder assembly.

248. Locking-Lever Spring Tension Adjustment (Holding Magnet Selector) (fig. 149)

a. PREPARATION. Remove the range-finder assembly.

b. REQUIREMENTS. Hook an 8-ounce scale on the end of the locking lever at the spring hole and pull in line with the spring. With the locking lever on the high part of its cam, it should require from 4 to 5½ ounces to start the lever moving away from the cam.

c. ADJUSTMENT. If this requirement is not met, replace with a new spring.

249. Selector-Arm Stop-Detent Adjustment (fig. 147)

a. PREPARATION. Remove the range-finder assembly.

b. REQUIREMENTS. With the locking lever on the low part of its cam, there should be an equal amount of clearance, within 0.003 inch, between the sides of the locking wedge and the locking lever when the selector arm is in the marking or spacing position.

c. ADJUSTMENT. Loosen the screw that mounts the selector-arm stop-detent eccentric post just enough to make the post frictiontight, position the stop detent by turning the post, then tighten the post mounting screw. *WHEN CHECKING THE MARKING POSITION, BE SURE THAT THE SELECTOR-ARM OPERATING SCREW DOES NOT INTERFERE WITH THE MOVEMENT OF THE SELECTOR ARM.* Replace the range-finder assembly.

250. Selector-Arm Stop Detent Spring Tension Adjustment (fig. 147)

a. PREPARATION. Remove the range-finder assembly.

b. REQUIREMENTS. Unhook the stop-dentent spring from the locking-lever guide. Hook an 8-ounce scale in the spring eye, and pull in line with the spring. It should require 4 to 5 ounces to pull the spring to its position length.

c. ADJUSTMENT. If this requirement is not met, replace with a new spring.

807975 O - 48 - 12

251. Selector-Lever Spring Tension Adjustment (Holding Magnet) (fig. 149)

a. PREPARATION. Remove the range-finder assembly.

b. REQUIREMENTS. With the code bars in the marking position and the main bail in its highest position, move the swords manually to the spacing position. Hook a 32-ounce scale over the end of each selector lever at the selector-cam sleeve and pull radially to the main shaft. A pull of 6 to 10 ounces should be required to start each selector lever moving.

c. ADJUSTMENT. Replace with a new spring.

Note. When checking the tension of the selector-lever springs, make sure that the selector levers are free and without bind.

252. Selector-Magnet Bracket Position Adjustment (fig. 150)

a. PREPARATION. Remove the range-finder assembly.

b. REQUIREMENTS. Rotate the selector-cam sleeve until the locking lever just drops off the high part of its cam; then rotate the cam sleeve backward until the rotation is stopped by the locking lever. With the selector-arm locked in its marking position, there should be a clearance of 0.060 inch to 0.065 inch between the armature extension and the face of a tooth on the armature cam.

c. ADJUSTMENT. Loosen the selector-magnet bracket mounting screws and the selector-magnet bracket adjusting-arm mounting screws just enough to make the bracket and adjusting arm frictiontight. Then position the selector-magnet bracket by means of the adjusting arm, using the 90783 adjusting wrench. To do this, insert the adjusting wrench in the hole above the end of the adjusting-arm and rotate the wrench. Tighten the bracket and adjusting-arm mounting screws and replace the range-finder assembly.

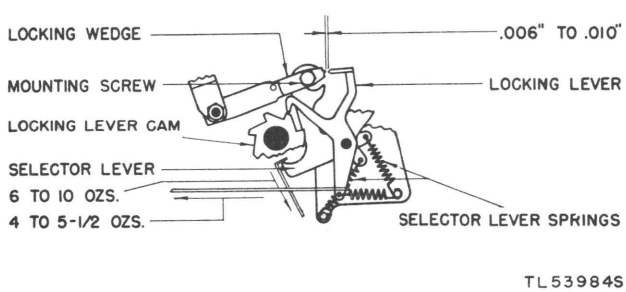

Figure 149. Locking-wedge requirements.

253. Selector-Magnet Bracket Adjustment (Holding) (fig. 146)

a. PREPARATION. Remove the range-finder assembly.

b. REQUIREMETS. With the selector-magnet energized, the clearance between the selector-arm operating screw and the selector arm should be from 0.004-inch to 0.006-inch greater when the armature extension is on a peak of its cam than when the armature extension is opposite an indent on the cam.

c. ADJUSTMENT. Energize the magnet and rotate the selector-cam sleeve until the armature extension is resting on a peak of the armature cam. Holding the cam sleeve in this position, turn the main shaft to the point where it moves the armature the greatest distance. Loosen the selector-magnet bracket mounting screws and, by means of the adjusting screw, rotate the selector-magnet bracket so that the armature just touches the pole faces, then turn

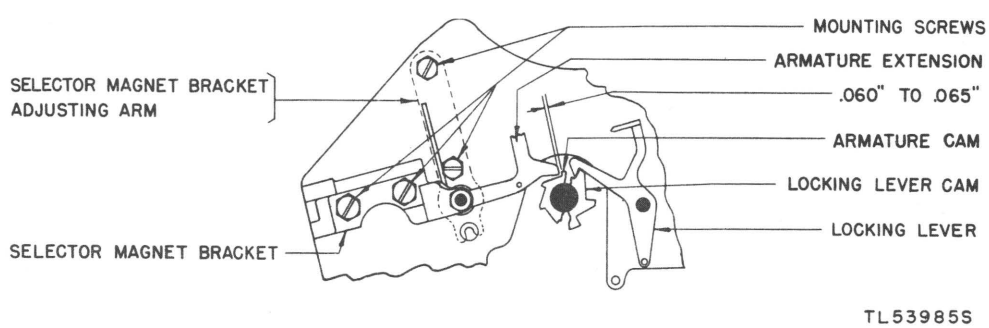

Figure 150. Selector-magnet bracket position requirements.

the adjusting screw an additional one-tenth of a turn counterclockwise. This will press the armature firmly against the magnet cores. *WHILE MAKING THE ONE-TENTH OF A TURN ADJUSTMENT BE CAREFUL TO AVOID LOST MOTION DUE TO LOOSE-FITTING SCREW THREADS.* Measure the clearance between the selector-arm operating screw and the selector arm, and if there is no clearance, back off the selector-arm operating screw to provide at least 0.006 inch. Then rotate the selector-cam sleeve so that the armature extension is opposite an indent of its cam and again measure the clearance between the selector-arm operating screw and the selector-arm. If the difference in the two clearances exceeds 0.006 inch, turn the selector-magnet bracket adjusting screw clockwise. If the difference in the clearance is less than 0.004 inch, turn the screw counterclockwise. Tighten the selector-magnet bracket mounting screws and replace the range-finder assembly.

254. Armature Spring Tension Adjustment (fig. 146)

a. PREPARATION. Remove the range-finder assembly; unhook the armature spring from its spring arm.

b. REQUIREMENTS. Rotate the main-shaft until the armature extension is on a high part of its cam. Hook a 32-ounce scale in the spring eye. It should require 13 to 15 ounces to pull the spring to position length when the selector-magnet coils are wired in parallel, or 13 to 24 ounces when coils are wired in series.

c. ADJUSTMENT. Loosen the spring-arm mounting nut and position the arm; then tighten the mounting nut. Rehook the armature spring and replace the range-finder assembly.

255. Selector-Arm Operating-Screw Adjustment (fig. 151)

a. PREPARATION. Remove the range-finder assembly.

b. REQUIREMENTS. With the selector magnet energized and the selector-cam sleeve rotated so that the armature extension is opposite an indent of its cam, there should be a clearance of from 0.003-inch to 0.006-inch between selector-arm operating screw and selector arm.

c. ADJUSTMENT. Loosen the selector-arm operating-screw locknut and position the screw. Tighten the locknut and replace the range-finder assembly.

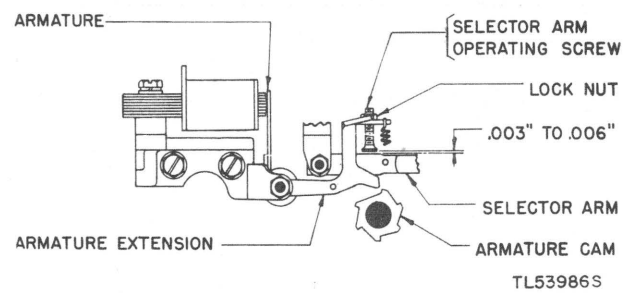

Figure 151. Selector-arm operating screw requirements.

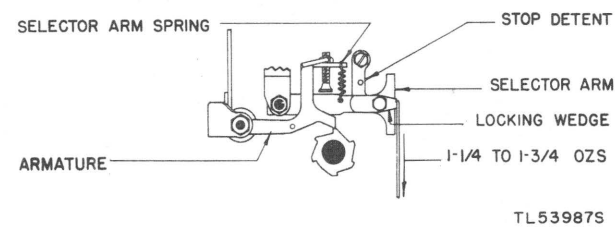

Figure 152. Selector-arm spring tension requirements.

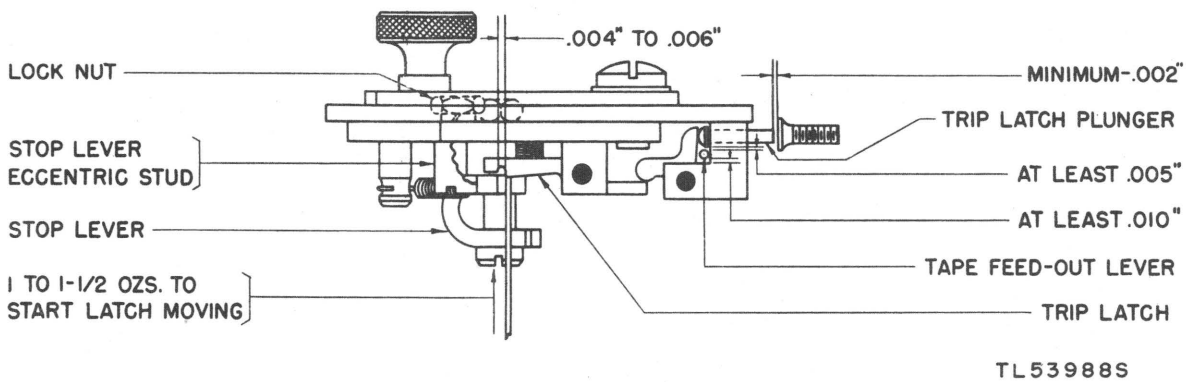

Figure 153. Stop-lever eccentric stud requirements.

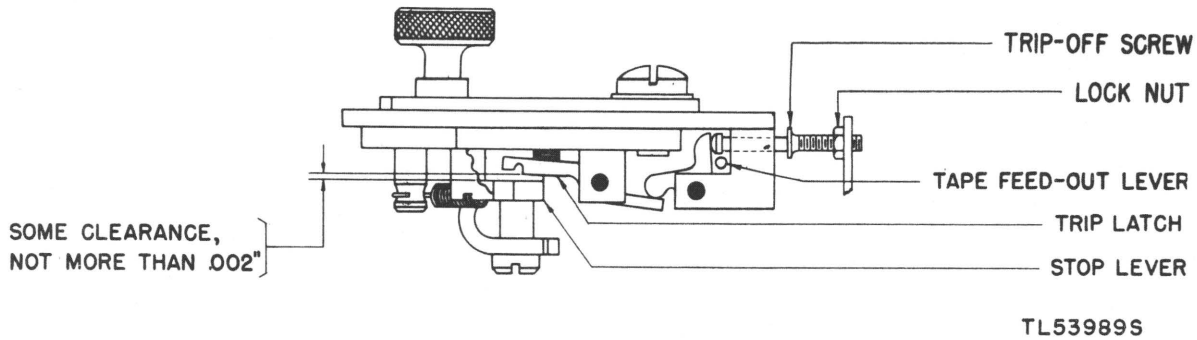

Figure 154. Trip-off screw requirements.

256. Selector-Arm Spring Tension Adjustment (fig. 152)

a. PREPARATION. Remove the range-finder assembly.

b. REQUIREMENTS. Unhook the selector-arm stop detent spring. Hook an 8-ounce scale over the end of the locking wedge and pull parallel to the selector-arm spring. With the armature extension on a high part of its cam, it should require 1¼ to 1¾ ounces to start the selector-arm moving.

c. ADJUSTMENT. If the requirement is not met, replace with a new spring. Test and rehook the detent spring. Replace the range-finder assembly.

257. Stop-Lever Eccentric Stud Adjustment (Holding Magnet Selector) (fig. 153)

a. PREPARATION. Remove the range-finder assembly.

b. REQUIREMENTS. The stop lever on the range-finder assembly should over-travel the latching face of the trip by 0.004-inch to 0.006-inch.

c. ADJUSTMENT. Loosen the stop-lever eccentric stud nut and position the screw. Tighten the nut. Be sure that the tightening of the nut does not disturb the adjustment.

258. Trip-Latch Spring Compression Adjustment (Holding Magnet Selector) (fig. 153)

a. PREPARATION. Remove the range-finder assembly and hold it in a horizontal position.

b. REQUIREMENTS. Apply the push end of an 8-ounce scale, held in a vertical position, to the trip latch, as near to the stop lever as possible. It should require 1 to 1½ ounces, when pushing upward, to start the trip latch moving.

c. ADJUSTMENT. If this requirement is not met, replace with a new spring and remount the range-finder assembly.

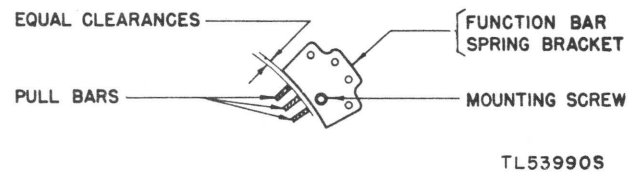

Figure 155. Function-bar spring-bracket requirements.

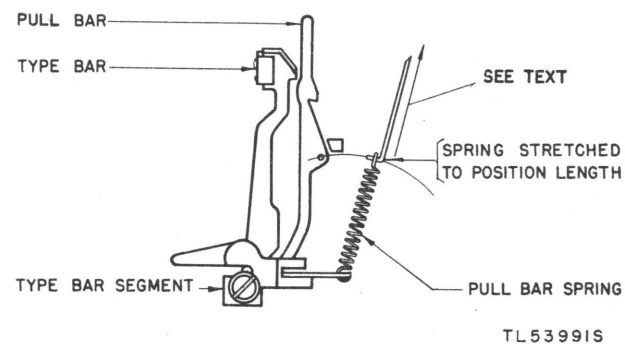

Figure 156. Pull-bar spring tension requirements.

259. Stop-Lever Spring Tension Adjustment (Holding Magnet Selector) (fig. 143)

a. PREPARATION. Be sure that the stop lever eccentric has been adjusted before checking this requirement. Remove the range-finder assembly.

b. REQUIREMENTS. Hold the trip-latch plunger operated, hook an 8-ounce scale on the

end of the stop lever of the range-finder assembly, and pull horizontally at right angles to the stop lever. It should require ¾ to 1¼ ounces to start the lever moving.

c. ADJUSTMENT. If this requirement is not met replace with a new spring. Replace the range-finder assembly, taking care that the tape feed-out lever fits under the left end of the trip-latch plunger, and to avoid jamming the trip-latch plunger against the armature trip-off screw when remounting. (See fig. 144 for location of parts.)

260. Trip-Off Screw Adjustment (fig. 154)

a. PREPARATION. None required.

b. REQUIREMENTS. With the armature in its unoperated position, rotate the selector-cam sleeve until the stopping edge of the stop lever is directly below the latching surface of the trip latch. There should be some clearance, but not more than 0.002 inch, between the stop lever and the trip latch. When the armature is held in the attracted position and with the stop lever against its eccentric stud, the trip-latch plunger should have at least 0.002 inch end play.

c. ADJUSTMENT. Loosen the trip-off screw locknut and position the screw to meet the first requirement. The latter requirement serves as a check on the trip-off screw adjustment and also on the adjustment of the selector-magnet bracket.

261. Function-Bar Spring-Brackets Adjustment (fig. 155)

a. PREPARATION. Remove the type-basket assembly. (See par. 161*c*.)

b. REQUIREMENTS. The pull bars supported by the function-bar spring brackets should be free and without bind, and they should have approximately equal clearance between the corresponding edges of the function-bar spring brackets.

c. ADJUSTMENT. Adjust both the right and left function-bar spring brackets by rotating them on their mounting screws.

262. Pull-Bar Spring Tension Adjustment (fig. 156)

a. PREPARATION. Remove the type-basket assembly. (See par. 161*c*.) Unhook each spring from its pull bar.

b. REQUIREMENTS. Use an 8-ounce scale held in vertical position. Hook the scale in the spring eye as each spring is tested and pull in line with the spring. It should require from 3 to 4 ounces to extend any pull-bar spring (with associated type bar) to its position length and 5½ to 6¾ ounces to extend any pull-bar spring (without associated type bar) to its position length.

Note. For adjustments of pull-bar springs that are attached to either the right or left function pull-bar bracket, see right function pull-bar spring-bracket adjustment or left function pull-bar spring-bracket adjustment.

c. ADJUSTMENT. If requirements are not met by using the adjustment referred to in the note above, replace springs with new ones.

263. Main-Bail Roller Guide Adjustment (fig. 157)

a. PREPARATION. None required.

b. REQUIREMENTS. The main-bail should be free throughout its travel and the roller guides should be so positioned that the requirements

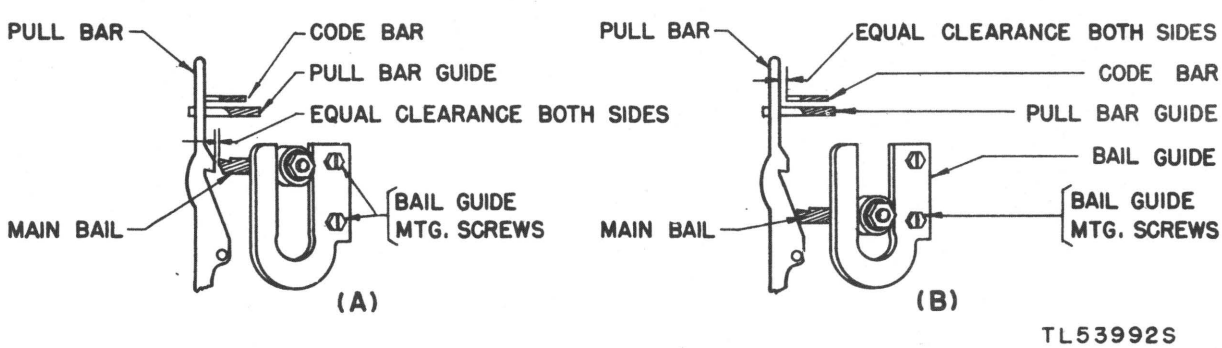

Figure 157. Main-bail roller guide requirements.

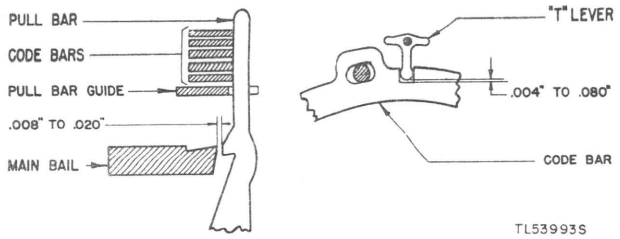

Figure 158. Pull-bar guide adjustment.

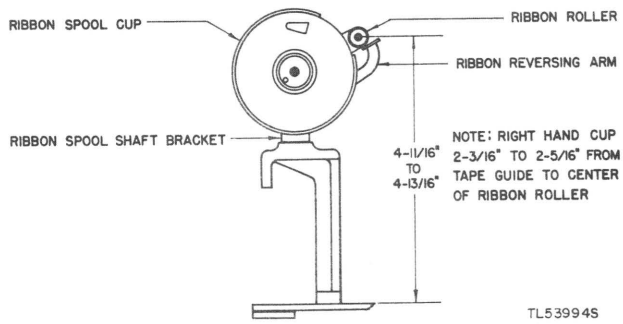

Figure 159. Ribbon-spool cups requirements.

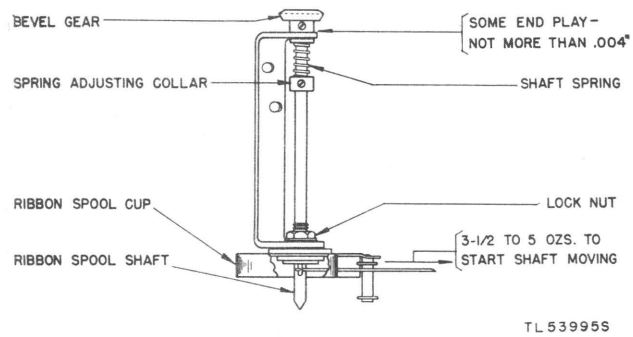

Figure 160. Ribbon-spool shaft gears requirements.

specified in the following adjustments can be met:

Pull-bar guide adjustment (fig. 158), paragraph 264.

Main-bail adjusting-screw preliminary adjustment (fig. 135), paragraph 265.

Main-bail adjusting-screw final adjustment (figs. 176B and 177B), paragraph 292.

To determine freeness, position the main-shaft so that the main-bail is in its uppermost position and remove the main-bail spring. The main-bail should fall to its lower position of its own weight. If the main-bail is free, the position of the bail guides need not be checked unless difficulty in meeting the requirements of the aforementioned adjustments is encountered.

c. ADJUSTMENT. (1) Position the pull-bar guide (code-bar mounting plate) so that it is in the middle of the adjustment provided by its elongated mounting holes, and loosen both mounting screws of each main-bail guide.

(2) With the BLANK code combination set up and the main-bail opposite the humps on the unselected pull bars, position the bail roller guides so that the clearance between the main-bail and the LETTERS and FIGURES pull-bar humps is approximately equal. Tighten the upper mounting screw of the right-hand guide so that the guide is frictiontight.

(3) With the main-bail roller on the high part of its cam, shift the main-bail guides, if necessary, so that the clearance between the code bars and the LETTERS and FIGURES pull-bars is approximately equal. (It may be necessary to advance the main-bail adjusting screw to obtain clearance between the pull-bars and code bars.) Tighten the lower mounting screw of the right-hand main-bail roller guide frictiontight.

(4) Recheck adjustment (2) and fully tighten both mounting screws of the right-hand guide after making any necessary readjustments.

(5) Remove the main-bail spring and position the left-hand bail roller guide so that the main-bail is free throughout its travel. After tightening the mounting screws of the left-hand bail roller guide, check the freeness of the main-bail by raising it to its uppermost position, manually, and releasing it. It should fall to its lower position of its own weight. Replace the main-bail spring.

264. Pull-Bar Guide Adjustment (fig. 158)

a. PREPARATION. None required.

b. REQUIREMENTS. Set up the BLANK combination on the unit. There should be a 0.008-inch to 0.020-inch clearance between the unselected pull-bars and the main-bail when the main-bail is opposite the pull-bar humps and the play of the main-bail is taken up in the direction to make this clearance a minimum. Also check this clearance with the LETTERS combination set up. There should also be 0.004-inch to 0.080-inch clearance between the end of the No. 1 T-lever and the bottom of the slot in the code bar.

c. ADJUSTMENT. Position the pull-bar guide by means of its mounting screws.

265. Main-Bail Adjusting-Screw Adjustment (Preliminary) (fig. 135)

a. PREPARATION. None required.

b. REQUIREMENTS. When the BLANK and LETTERS combinations are set up in turn and the main-bail roller is on the high part of its cam, there should be a 0.010-inch to 0.050-inch clearance between the unselected pull-bars and the inner edges of the code bars when the play in the main-bail and the pull-bars is taken up in a direction to make this clearance a minimum.

c. ADJUSTMENT. Adjust by means of the main-bail adjusting screw.

266. Ribbon-Spool Cups Adjustment (fig. 159)

a. PREPARATION. None required.

b. REQUIREMENTS. The center of the left-hand ribbon roller should be from 4 11/16 inches to 4 13/16 inches from the printer base plate. The center of the right-hand ribbon roller should be 2 3/16 inches to 2 5/16 inches from the top surface of the tape guide.

c. ADJUSTMENT. Position both ribbon-spool cups by means of their locknuts.

267. Ribbon-Spool Shaft Gears Adjustment (fig. 160)

a. PREPARATION. None required.

b. REQUIREMENTS. The ribbon-spool shafts should have some end play, but not over 0.004 inch.

c. ADJUSTMENT. Shift the ribbon-feed shaft, if necessary, to avoid interference between the ribbon-feed shaft gear and the ribbon-spool shaft gear, and push the ribbon-spool shaft toward the rear of the unit. To adjust, position the ribbon-spool shaft bevel gear, locating it so that setscrew engages the flat on shaft.

Note: If the unit is equipped with an end-of-line indicator mechanism or tape feed-out control mechanism, the required end play in the right-hand ribbon-spool shaft should be obtained by positioning the rear collar on the right-hand ribbon-spool shaft.

268. Ribbon-Spool Brackets Adjustment

a. PREPARATION. None required.

b. REQUIREMENT:. The ribbon-spool brackets should aline with the edges of the base plate and there should be a minimum amount of backlash between the bevel gears on the ribbon-spool shafts and the bevel gears on the ribbon-feed shaft throughout a complete revolution of the ribbon-spool shafts when the ribbon-feed shaft is in its extreme left-hand and right-hand position, respectively.

c. ADJUSTMENT. Position the ribbon-spool brackets.

Note. If the unit is equipped with an end-of-line indicator mechanism or a tape feed-out counter mechanism, the right-hand bracket should be adjusted so that the front edge of the right-hand ribbon-spool cup is approximately in line with the front edge of the left-hand ribbon-spool cup, and the gear backlash should be obtained by positioning the gear on the right-hand ribbon-spool shaft.

269. Ribbon-Spool Shaft Compression-Spring Adjustment (fig. 160)

a. PREPARATION. Move the ribbon-feed shaft to its left-hand position. Hook an 8-ounce scale over the pin in the right ribbon-spool shaft and pull horizontally at right angles to a line through the center of the pin and the center of the ribbon-spool shaft.

b. REQUIREMENTS. It should require from 3½ to 5 ounces to start the ribbon-spool shaft moving.

c. ADJUSTMENT. This requirement is obtained by means of the spring adjusting collar. Move the ribbon-feed shaft to its right-hand position and adjust the left-hand compression spring in the same manner.

270. Ribbon-Spool Shafts Slot Adjustment (fig. 161)

a. PREPARATION. None required.

b. REQUIREMENTS. The ribbon-spools should be held firmly in place on ribbon-spool shafts.

c. ADJUSTMENT. Spread the prongs at the end of the ribbon-spool shafts.

271. Left Ribbon-Reverse Arm Shaft Adjustment (fig. 161)

a. PREPARATION. None required.

b. REQUIREMENTS. (1) The front end of the left ribbon-reverse arm shaft should clear the left ribbon-spool cup by 0.010 inch to 0.020 inch when ribbon-reverse arm is held against bracket to make the clearance a minimum.

(2) With the left ribbon-reverse arm in the normal position against the ribbon-spool cup, the left ribbon-reverse arm shaft should have some end play, but not more than 0.004 inch.

c. ADJUSTMENT. (1) Position the ribbon-reverse arm on the ribbon-reverse arm shaft by means of its setscrew.

(2) Position the collar on the shaft by means of its setscrew and locate the setscrew so that it is easily accessible.

272. Right Ribbon-Reverse Arm Shaft Adjustment

a. PREPARATION. None required.

b. REQUIREMENTS. (1) There should be some clearance, but not more than 0.004 inch, between the front end of the right ribbon-reverse arm shaft and the ribbon-spool cup.

(2) The rear of the slot in the right ribbon-reverse arm should be in line with or slightly behind rear flange of ribbon-spool cup roller.

c. ADJUSTMENTS. (1) Position the collar on the shaft by means of its setscrew.

(2) Position the right ribbon-reverse arm on the ribbon-reverse arm shaft by means of its setscrew.

273. Ribbon-Reverse Pawl Link Adjustment (fig. 162)

a. PREPARATION. None required.

b. REQUIREMENTS. There should be 0.015 inch to 0.025 inch clearance between both right and left ribbon-reverse pawls and the ribbon-reverse bail, when the ribbon-reverse arms are against the ribbon-spool cups and the ribbon-reverse bail is opposite each ribbon-reverse pawl. The ribbon-reverse pawl links should not bind on their shoulder screws.

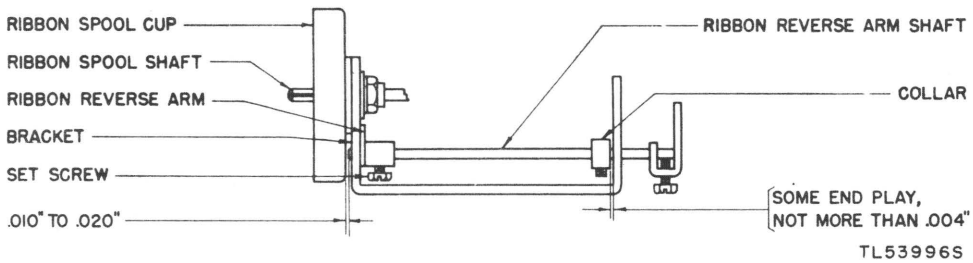

Figure 161. Ribbon-spool shafts slot requirements.

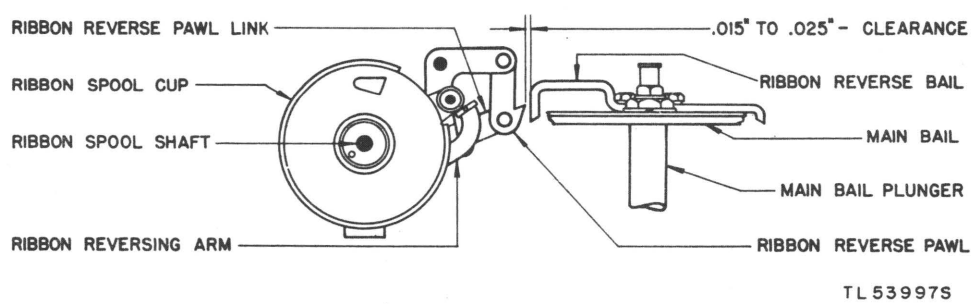

Figure 162. Ribbon-reverse pawl link requirements.

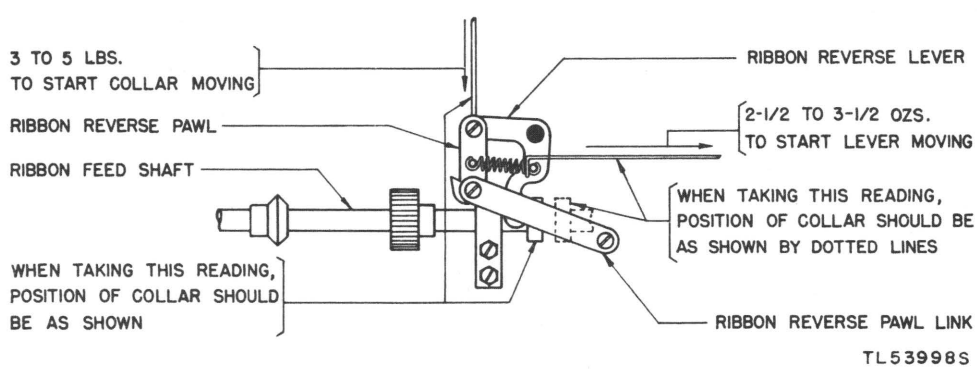

Figure 163. Ribbon-feed shaft safety-spring requirements.

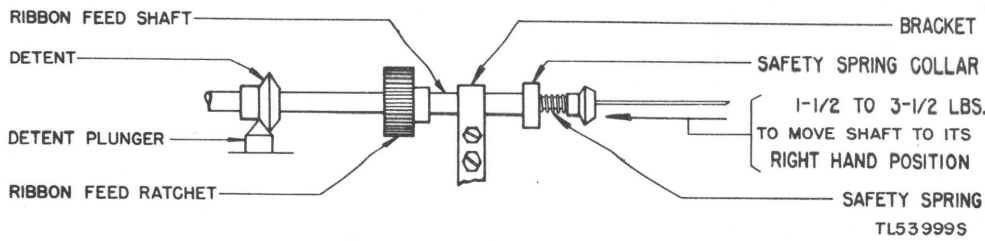

Figure 164. Ribbon-feed shaft detent-plunger spring compression requirements.

c. ADJUSTMENT. Position the ribbon-reversing arms on their shafts by means of their setscrews.

274. Ribbon-Feed Shaft Safety-Spring Compression Adjustment (fig. 163)

a. PREPARATION. None required.

b. REQUIREMENTS. With the main-bail in its extreme upper position, slide the ribbon-feed shaft to its left-hand position. Apply the push end of a 12-pound scale to the upper end of the right ribbon-reverse pawl, and push down vertically. It should require 3 to 5 pounds to start the spring collar moving. When measuring this tension, hold the ribbon-feed shaft to prevent it from moving. Slide the ribbon-feed shaft to its right-hand position and check the ribbon-feed shaft left safety spring in a similar manner.

c. ADJUSTMENT. Replace with a new spring.

275. Ribbon-Feed Shaft Detent-Plunger Spring Compression Adjustment (fig. 164)

a. PREPARATION. Remove the ribbon-feed pawl and the ribbon-check pawl.

b. REQUIREMENTS. With the ribbon-feed shaft in its left-hand position, apply the push end of a 12-pound scale to the left end of the shaft and push in line with the shaft. It should require 1½ to 3½ pounds to move the shaft to its right-hand position.

c. ADJUSTMENT. Replace with a new detent spring.

276. Ribbon-Feed Lever Spring Tension Adjustment (fig. 165)

a. PREPARATION. Remove the ribbon-feed pawl and the ribbon-check pawl.

b. REQUIREMENTS. With the ribbon-feed lever roller in the plunger indent, hook a 32-ounce scale over the top of the ribbon-feed lever and pull horizontally toward the front of the unit. It should require 12 to 18 ounces to start the lever moving.

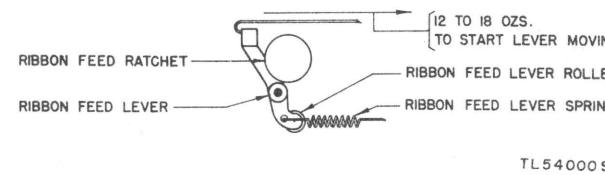

Figure 165. Ribbon-feed lever spring tension requirements.

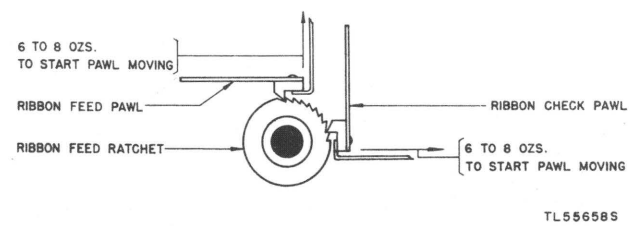

Figure 166. Ribbon-check pawl spring pressure requirements.

c. ADJUSTMENT. Replace with a new spring. Replace the ribbon-feed pawl and the ribbon-check pawl.

277. Ribbon-Check Pawl Adjustment

a. PREPARATION. None required.

b. REQUIREMENTS. The upper end of the ribbon-check pawl (fig. 166) should be at least 1/16-inch below the lower surface of the pull-bar guide.

c. ADJUSTMENT. Position the ribbon-check pawl by means of its mounting screw.

278. Ribbon-Check Pawl Spring Pressure Adjustment (fig. 166)

a. PREPARATION. None required.

b. REQUIREMENTS. With an 8-ounce scale hooked over the extreme lower end of the ribbon-check pawl and pulled at right angles to the pawl, it should require 6 to 8 ounces to start the pawl moving away from the ratchet.

c. ADJUSTMENT. Make certain that the working edge of the pawl does not bind against a tooth on the ratchet when taking this pressure. Adjust by bending the ribbon-check pawl.

279. Ribbon-Feed Pawl Adjustment

a. PREPARATION. None required.

b. REQUIREMENTS. The ribbon-feed pawl (fig. 166) should be so positioned that the ribbon-feed ratchet will be moved one or two teeth for every revolution of the main-shaft. Make this check throughout a complete revolution of the ribbon-feed shaft.

c. ADJUSTMENT. Position the ribbon-feed pawl by means of its mounting screw.

280. Ribbon-Feed Pawl Spring Pressure Adjustment (fig. 166)

a. PREPARATION. None required.

b. REQUIREMENTS. With an 8-ounce scale hooked over the extreme front edge of the ribbon-feed pawl and pulled at right angles to the pawl, it should require 6 to 8 ounces to start pawl moving away from ribbon-feed ratchet.

c. ADJUSTMENT. Make certain that the feeding edge of the pawl does not bind against a tooth on the ratchet when taking this pressure. To adjust, bend the ribbon-feed pawl spring.

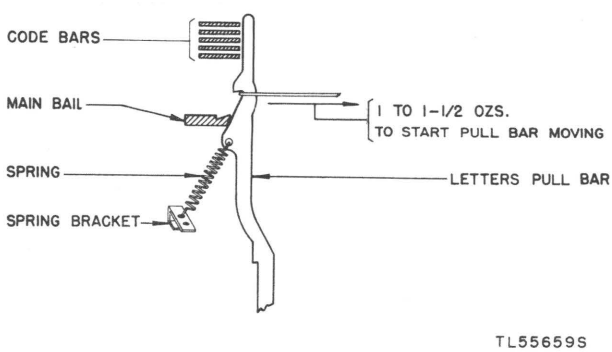

Figure 167. Left function pull-bar spring-bracket requirements.

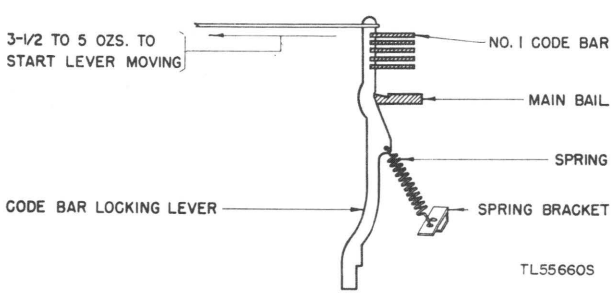

Figure 168. Right function pull-bar spring-bracket requirements.

281. Right and Left Ribbon-Reverse Pawls Spring Tension Adjustment (fig. 163)

a. PREPARATION. None required.

b. REQUIREMENTS. With the ribbon-feed shaft in its left-hand position, hook an 8-ounce scale over the spring post on the left ribbon-reverse lever and pull in line with the spring. It should require 2½ to 3½ ounces to start the lever moving. Move the ribbon-feed shaft to its right-hand position and check the right ribbon-reverse pawl spring in the same manner.

c. ADJUSTMENT. Replace with a new spring.

282. Left Function Pull-Bar Spring-Bracket Adjustment (fig. 167)

a. PREPARATION. Move the main-bail to its extreme downward position, and hook an 8-ounce scale over the LETTERS pull bar, just below the hump, and pull horizontally at right angles to the pull bar.

b. REQUIREMENTS. It should require 1 to 1½ ounces to start the pull-bar moving.

c. ADJUSTMENT. Adjust the position of the spring bracket by means of its locknut to meet this requirement.

283. Right Function Pull-Bar Spring Bracket Adjustment (fig. 168)

a. PREPARATION. None required.

b. REQUIREMENTS. Move the main-bail to its extreme upward position; hold the code-bar bell cranks away from the code-bar locking lever. Hook an 8-ounce scale over the code-bar locking lever just above No. 1 code bar and pull horizontally at right angles to the locking lever. It should require 3½ to 5 ounces to start the locking lever moving.

c. ADJUSTMENT. Position spring bracket by means of its locknut to meet this requirement.

284. Punch-Arm Casting Adjustment (fig. 169)

a. PREPARATION. None required.

b. REQUIREMENTS. (1) There should be approximately equal clearance between the ends of the punch-arm casting and the locknuts of the pilot screws.

(2) The punch-arm casting should have

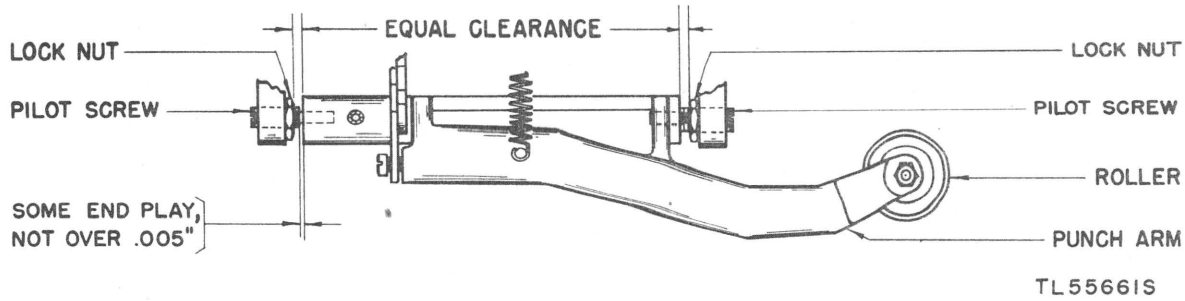

Figure 169. Punch-arm casting requirements.

some end play on its pilot screws, but not over 0.005 inch.

c. ADJUSTMENT. Adjust both pilot screws to meet the first requirement. Adjust the front pilot screw only to meet the latter requirement. Tighten both locknuts.

285. Punch-Bail End-Play Adjustment (figs. 170 and 171)

a. PREPARATION. None required.

b. REQUIREMENTS. The punch-bail should have some end play on its pivot-bearing screws, but not over 0.005 inch.

c. ADJUSTMENT. Adjust by means of the front pivot-bearing screw.

286. Punch-Bail Front Pivot-Bearing Adjustment (figs. 170 and 171)

a. PREPARATION. None required.

b. REQUIREMENTS. The punch selector fingers should be positioned to meet the following requirements.

(1) As viewed from the left, with the punch selector fingers held against their respective punches, the rear edge of the rear finger and the front edge of the front finger should be within the outer edges of their respective punches.

(2) As veiwed from the left, there should be some clearance, but not more than 0.003 inch, between the rear selector finger and its punch when the front selector finger just touches its associated punch.

c. ADJUSTMENTS. Loosen the front pivot-bearing screw locknut and tilt the front pivot-bearing plate to the left or right by means of the tilt and clamp screws, to meet the first requirement. To meet the latter requirement, operate the punch-bail by hand until the punch selector fingers almost touch the punches and position the front pivot-bearing plate vertically by means of the tilt and clamp screws so that when the front selector finger just touches its punch there will be some clearance, but not more than 0.003 inch, between the rear selector finger and its associated punch. Recheck (1). Then tighten front pivot-bearing screw locknut.

287. Feed-Roll Bearings Adjustment (fig. 172)

a. PREPARATIONS. Hold the feed-roll detent, the feed pawl, and the tape-tension lever away from the feed-roll.

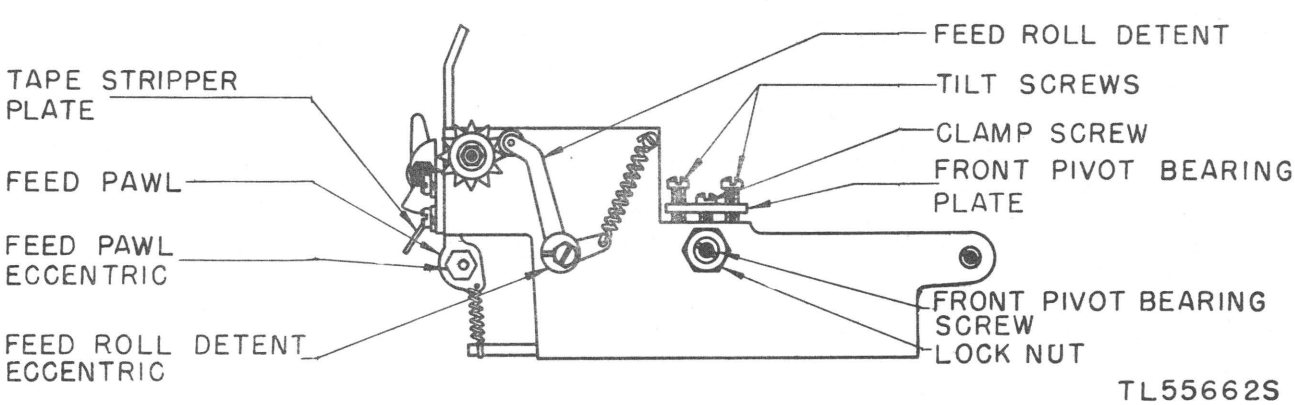

Figure 170. Front pivot-bearing screw.

b. REQUIREMENTS. The feed-roll should turn freely in its bearings and should have some end play, but not over 0.004-inch.

c. ADJUSTMENT. First position the rear bearing bracket on its mounting screws to provide freedom of rotation and then adjust the bearing bushing in this bracket to provide end play.

288. Tape-Tension Lever Stud Adjustment (fig. 173)

a. PREPARATION. None required.

b. REQUIREMENTS. The tape-tension lever should be centrally located with respect to the feed-roll pins so that the tape-tension lever does not touch the pins when play in both the feed roll and the tape-tension lever is taken up in opposite directions.

c. ADJUSTMENT. Adjust by adding or removing shims between the shoulder on the tape-tension lever stud and its mounting bracket.

289. Feed-Roll Detent Preliminary Adjustment (fig. 174)

a. PREPARATION. None required.

b. REQUIREMENTS. Move the punch-bail to its operated position and insert the 73517 feed-roll positioning gage in the punch-block guide slot so that the projection on the gage stops against the feed-hole punch. The position of the feed-roll should be such that a pin on the feed-roll lines up with the center hole of the gage.

c. ADJUSTMENT. Position the feed-roll by means of the feed-roll detent eccentric, locating the eccentric so that the high part is toward the left.

290. Feed-Pawl Eccentric Preliminary Adjustment (fig. 175)

a. PREPARATION. None required.

b. REQUIREMENTS. With the punch-arm cam roller on the low part of its cam, the feed-pawl should rest in the bottom of the notch which is just below the horizontal center line of the feed-roll.

c. ADJUSTMENT. Adjust by means of the feed-pawl eccentric, locating it so that the high part of the eccentric is toward the left.

291. Code-Bar Bell Cranks Adjustment (figs. 175, 176-A, and 177-A)

a. PREPARATION. None required.

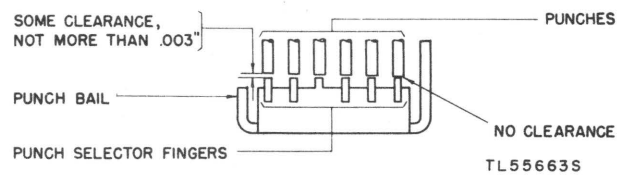

Figure 171. Punch-bail end-play requirements.

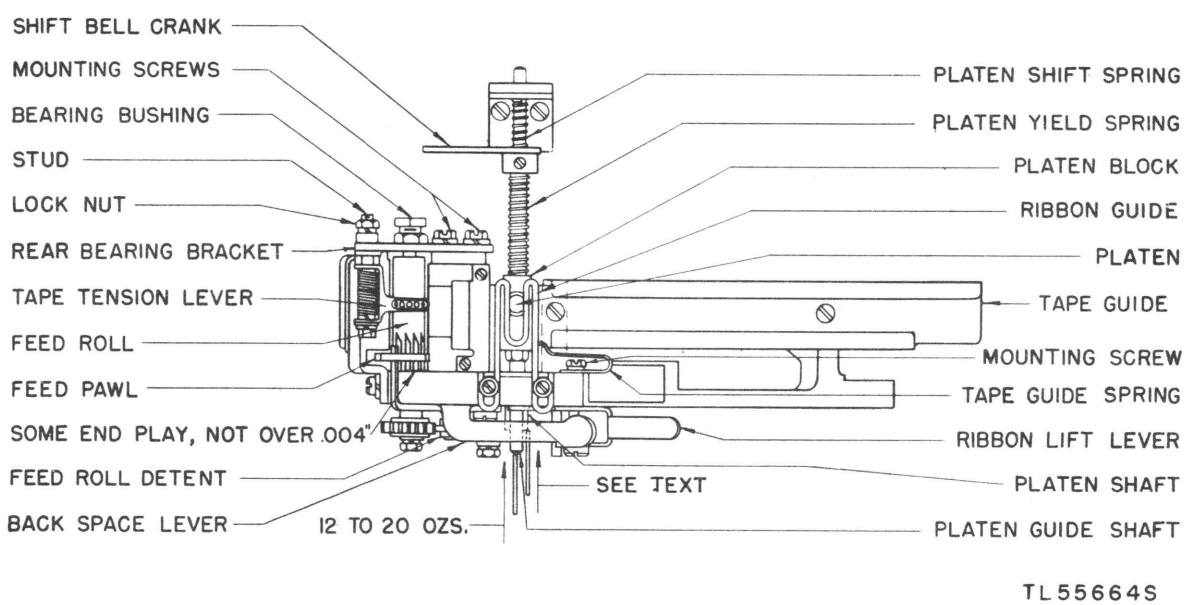

Figure 172. Feed-roll bearings requirements.

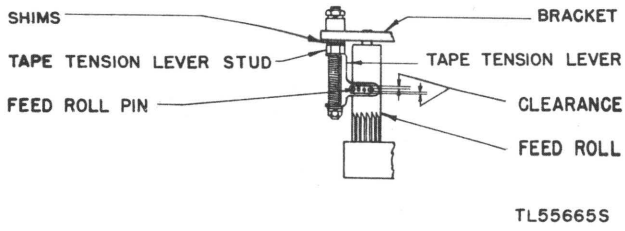

Figure 173. Tape-tension lever stud requirements.

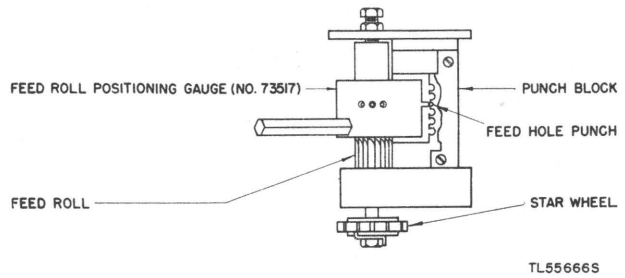

Figure 174. Feed-roll detent requirements.

b. REQUIREMENTS. (1) The code bars should move freely between the code-bar bell crank separator plates.

(2) The code-bar bell cranks should meet the following requirement: with the code-bars positioned for BLANK selection and the code-bar locking lever positioned so that the outside edges of the code-bar cranks overrun the inside edges of the code bars approximately 1/32-inch, there should be a 0.010-inch to 0.030-inch clearance between the right ends of the code bars and the adjacent edges of the associated bell cranks.

(3) The code-bar bell cranks should meet the following requirement: with the code bars positioned for BLANK selection and the locking lever resting against the code bars, there should be a 0.010-inch to 0.030-inch clearance between the right ends of the code bars and the adjacent edges of the associated code-bar bell cranks.

c. ADJUSTMENTS. Make certain that the vertical-lever bracket is mounted approximately in a vertical position and aline the code-bar bell cranks with the code-bars by adding or removing shims between the lower separator plate and the shoulder on the pivot post to meet the first requirement. The latter requirement may be met by loosening the pivot-post locknut and moving the pivot post horizontally in the elongated mounting hole in the vertical-lever bracket. Tighten the pivot-post locknut.

Note. When making the foregoing adjustments, make certain that the extension on each code-bar bell fully engages the vertical lever and at the same time does not overlap sufficiently to interfere with the adjacent vertical lever. Likewise each code-bar bell crank should fully engage the end of the associated vertical lever (vertically) but the upper end of any vertical lever should not interfere with the free movement of the code-bar bell crank immediately above the one with which that vertical lever cooperates.

292. Main-Bail Adjusting-Screw Final Adjustment (figs. 176-B and 177-B)

a. PREPARATION. None required.

b. REQUIREMENTS. With the code bars positioned for LETTERS selection and the main-bail roller on the high part of its cam, there should be at least a 0.010-inch clearance between the front edges of the code bars and the adjacent edges of the code-bar bell cranks.

c. ADJUSTMENT. Readjust the main-bail adjusting screw, keeping within the previously specified limits of 0.010-inch to 0.050-inch between the pull-bars and code-bars.

293. Vertical-Lever Pivot-Screw Adjustment (fig. 175)

a. PREPARATION. None required.

b. REQUIREMENTS. With the code-bars positioned to the right (LETTERS combination), and the code-bar bell cranks resting against the code bars, the right edge of the punch-engaging projection on the punch selector fingers should be in approximate alinement with the right edges of the punches, when all play in the associated parts is taken up by pressing the punch bars lightly toward the left.

c. ADJUSTMENT. Position the vertical-lever pivot screw in its mounting slot.

294. Punch Selector-Finger Backstop Adjustment (fig. 175)

a. PREPARATION. None required.

b. REQUIREMENTS. (1) When the punch selector fingers are held to the right against the backstop, the left ends of the punch selector fingers should engage the guide comb in the left end of the punch bail by not less than one-half the thickness of the comb.

(2) When the main-bail is in its lowest position, there should be some clearance between the backstop and the right end of all punch selector fingers.

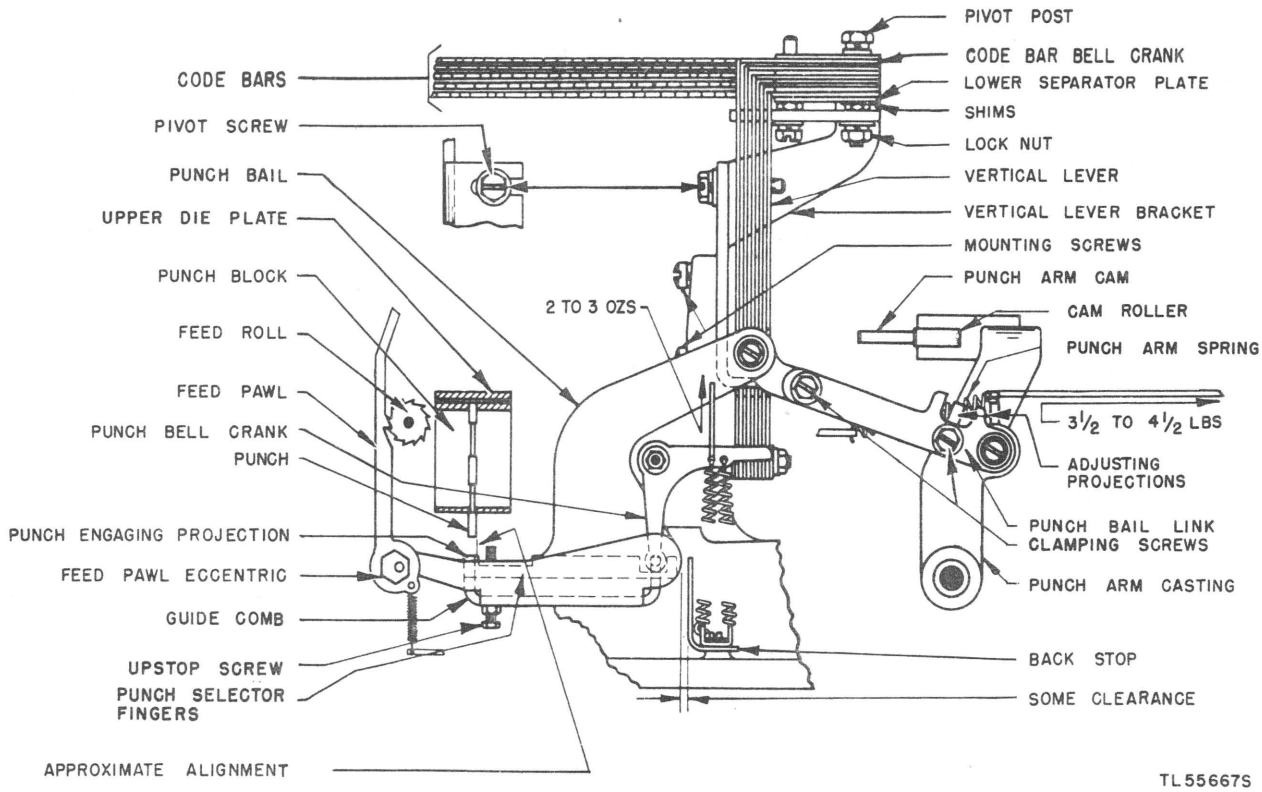

Figure 175. Feed-pawl eccentric requirements.

c. ADJUSTMENT. Position the punch selector finger backstop by means of its elongated mounting holes.

Note. In order to check the adjustments given in paragraphs 295 and 296 following, it will be necessary to remake them.

295. Punch-Bail Link Adjustment (fig. 175)

a. PREPARATION. None required.

b. REQUIREMENTS. Back off the main-bail spring adjusting screw until the spring arm is in a position that will reduce the spring tension on the main bail to a minimum. Back off the punch bail upstop screw. When the LETTERS combination is selected and the unit is operated under power the LETTERS combination should be perforated and the feed hole should be just punched cleanly through the tape.

c. ADJUSTMENT. Loosen the clamping screws of the punch bail link and adjust the length of the link by shifting the adjusting projections with a screwdriver. Restore the main-bail spring adjusting screw to its former setting, approximately, and tighten its locknut.

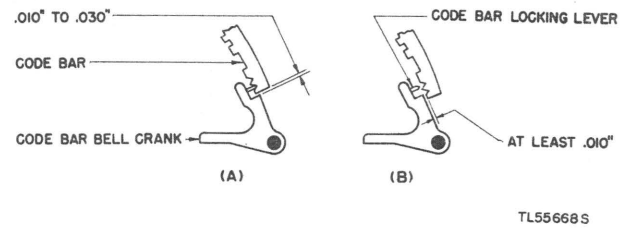

Figure 176. Code-bar bell cranks requirements.

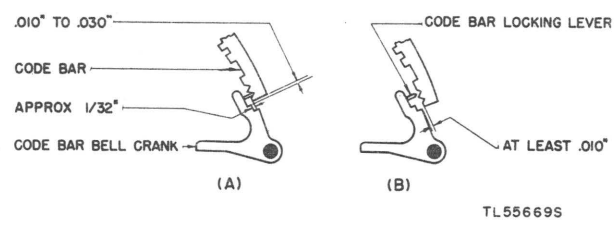

Figure 177. Code-bar locking-lever requirements.

296. Punch-Bail Upstop-Screw Adjustment (fig. 175)

a. PREPARATION. Check to see that the punch-bail link adjustment is not upset.

b. REQUIREMENTS. With the unit under power

and the LETTERS combination selected, the feed holes should be punched cleanly in tape.

c. ADJUSTMENT. With BLANK combination selected and with the punch arm cam roller on the highest part of its cam, advance the upstop screw (in the punch-bail) against the bottom plate of the punch block until an unperforated section of tape can be inserted in the punch block. Then back off the upstop screw until the tape is just held frictiontight between the feed hole punch and the upper die plate. Back off the upstop screw an additional one-quarter turn and tighten the locknut. Operate the unit under power with the LETTERS combination selected and determine whether or not the feed holes are punched cleanly in the tape. (By cleanly is meant a well-defined hinged lid with no fibrous edges and with no appreciable tear at the hinged portion of the feed hole lid. A slight tear is permissible at the hinged portion of the code perforations.) If the feed holes are not cleanly punched, a refinement of the punch-bail link adjustment and punch-bail upstop screw adjustment may be necessary.

297. Feed-Roll Detent Final Adjustment

a. PREPARATION. None required.

b. REQUIREMENTS. Refine the adjustment of the feed-roll detent eccentric so that the perforations in the tape meet the standard spacing of 10 holes to the inch.

c. ADJUSTMENT. Check this requirement by perforating a length of tape with a series of nine BLANKS followed by a LETTERS combination. Check tape against the 2215 tape gage.

298. Feed-Pawl Eccentric Final Adjustment (fig. 175)

a. PREPARATION. None required.

b. REQUIREMENTS. When the motor is rotated by hand, the feed pawl should rotate the feed roll a full step on each downward stroke.

c. ADJUSTMENT. Check by holding the detent lever free of the star wheel during the downward stroke of the feed pawl. With the correct adjustment, the star wheel should not move when re-engaged by the detent. Readjust the tape-feed pawl eccentric to meet this requirement.

299. Tape-Stripper Plate Adjustment (fig. 170)

a. PREPARATION. None required.

b. REQUIREMENTS. There should be some clearance, but not over 0.010 inch, between the upper edge of the tape-stripper plate and the feed roll. Check throughout a complete revolution of the feed roll.

c. ADJUSTMENT. Position the stripper plate by utilizing its elongated mounting holes.

Note. IN SOME UNITS THE TAPE CHUTE SERVES AS A TAPE-STRIPPER PLATE. IN SUCH CASES, ADJUST THE TAPE CHUTE TO MEET THESE REQUIREMENTS.

300. Tape-Tension Lever Spring Tension Adjustment (fig. 178)

a. PREPARATION. None required.

b. REQUIREMENTS. Hook an 8-ounce scale over the end of the slotted extension of the tape-tension lever and pull at right angles to the lever. It should require a pull of 5 to 5½ ounces to start the slotted extension of the lever moving away from the feed roll.

c. ADJUSTMENT. Loosen the tape-tension lever bearing-shaft locknut and rotate the bearing shaft in either a clockwise or counterclockwise direction. Then tighten the locknut.

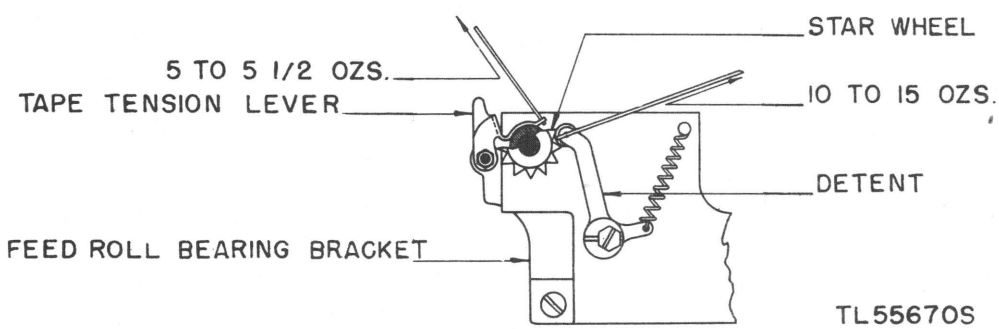

Figure 178. Tape-tension lever spring tension requirements.

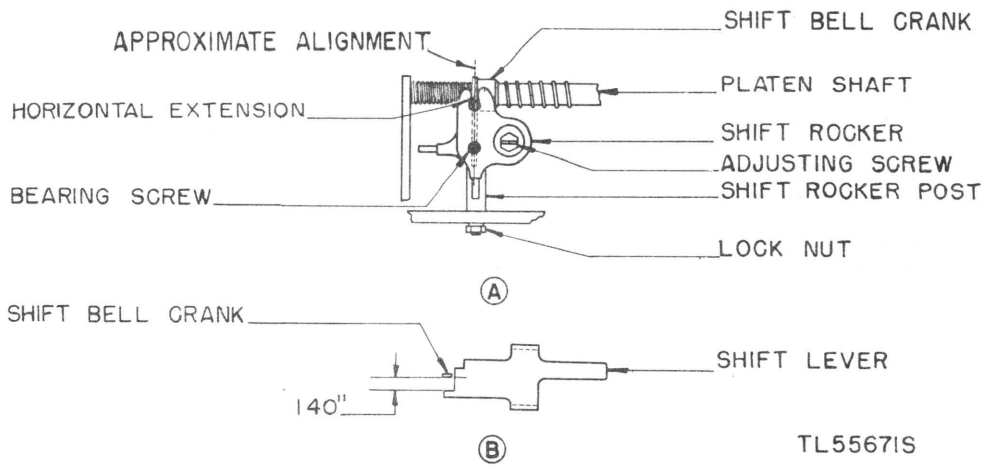

Figure 179. Shift rocker post requirements

301. Shift Rocker Post Adjustment (fig. 179)

a. PREPARATION. None required.

b. REQUIREMENTS. The sides of the shift rocker post should be parallel to the platen shaft.

c. ADJUSTMENT. Loosen the shift rocker post locknut and rotate the post. Tighten locknut.

302. Shift Rocker Lever Post Adjustment

a. PREPARATION. None required.

b. REQUIREMENTS. The front surface of the shift rocker lever post should be parallel to the front edge of the base plate.

c. ADJUSTMENT. Adjust by loosening the shift rocker lever post locknut and rotating the post. Then tighten the locknut.

303. Shift Bell-Crank Adjustment (fig. 179)

a. PREPARATION. None required.

b. REQUIREMENTS. With the platen shaft held so that the front face of the downward extension of the shift bell-crank is opposite the mark in the top surface of the shift lever, the horizontal extension of the shift bell-crank should line up approximately with the vertical center line through the shift rocker bearing screw.

c. ADJUSTMENT. Bend the horizontal extension of the shift bell-crank.

304. Shift Bell-Crank Guide Adjustment (fig. 180)

a. PREPARATION. None required.

b. REQUIREMENTS. The platen assembly should shift freely in the shift bell-crank guide slot and the printing face on the platen should be approximately horizontal.

c. ADJUSTMENT. Position the shift bell-crank guide.

305. Shift Rocker Adjustment

a. PREPARATION. None required.

b. REQUIREMENTS. With the platen assembly in the forward (FIGURES) position, select the LETTERS pull bar and rotate the main-shaft until the main-bail roller is on the low part of its cam. Under these conditions, the vertical arm of the shift bell-crank should overtravel the rear shoulder of the shift lever by not more than 0.008 inch.

c. ADJUSTMENT. Adjust the shift rocker by means of its adjusting screw.

306. Ribbon-Guide Adjustment (fig. 172)

a. PREPARATION. None required.

b. REQUIREMENTS. The ribbon should be centrally located with respect to any type pallet. The height of the ribbon guide should be such that the ribbon is held approximately 1/32 inch

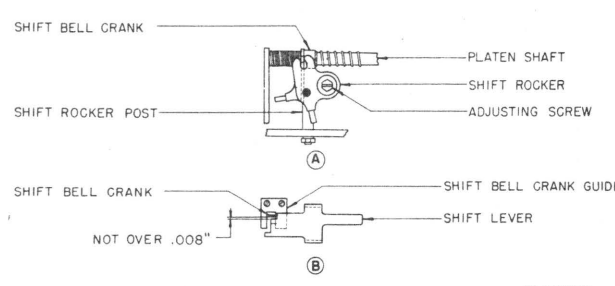

Figure 180. Shift bell-crank

above the tape. In operation, the ribbon should remain central with respect to the type pallets, and the rear edge should not curl.

c. ADJUSTMENTS. Position the ribbon guide toward the front or rear to meet the first requirement. Bend the ribbon guide adjacent to the main casting to meet the second requirement. The latter requirement may be met by bending the forward end of the lower part of the ribbon guide upward to eliminate the tendency to curl.

307. Feed-Roll Detent-Lever Spring Tension Adjustment (fig. 178)

a. PREPARATION. None required.

b. REQUIREMENTS. With a 32-ounce scale hooked over the detent lever at the roller and pulling at right angles to the detent lever, it should require 10 to 15 ounces to start the roller moving away from the star wheel.

c. ADJUSTMENT. Replace with a new spring.

308. Punch-Arm Spring Tension Adjustment (fig. 175)

a. PREPARATION. None required.

b. REQUIREMENTS. Move the punch-arm cam roller to the low part of its cam. Hook a 12-pound scale over the punch-arm spring post and pull in line with the spring. It should require 3½ to 4½ pounds to start the roller moving away from its cam.

c. ADJUSTMENT. Replace with a new spring.

309. Punch Bell-Crank Spring Tension Adjustment (fig. 175)

a. PREPARATION. Remove the tape guide.

b. REQUIREMENTS. Move the main-bail roller to the high part of its cam. Hook an 8-ounce scale under the horizontal arm of each punch bell-crank at the spring and pull vertically upward. It should require 2 to 3 ounces to start each bell-crank moving.

c. ADJUSTMENT. Replace with new springs. Replace the tape guide.

310. Platen-Shift Spring Tension Adjustment (fig. 172)

a. PREPARATION. None required.

b. REQUIREMENTS. Move the platen to the LETTERS position. Apply the push end of a 64-ounce scale to the front end of the platen shaft and push horizontally toward the rear. It should require 5 to 7½ ounces to start the shift bell-crank extension moving away from the rear shoulder of the shift lever.

Note. On units equipped with a magnet-operated tape feed-out counter mechanism the platen-shift spring tension should be 6 to 10 ounces.

c. ADJUSTMENT. Replace with a new spring.

311. Platen-Yield Spring Tension Adjustment (fig. 172)

a. PREPARATION. None required.

b. REQUIREMENTS. With the platen shaft held in the extreme rear position apply the push end of a 64-ounce scale to the front end of the platen guide shaft and push horizontally toward the rear. It should require 12 to 20 ounces to start the platen block moving on the platen shaft.

c. ADJUSTMENT. Replace with a new spring.

312. Shift-Lever Spring Tension Adjustment (fig. 179)

a. PREPARATION. None required.

b. REQUIREMENTS. With the shift bell-crank held toward the rear (away from the shoulder on the shift lever) apply an 8-ounce scale to the shift lever and push downward in line with the right edge of the platen shaft. It should require ½ to 1 ounce to start the lever moving.

c. ADJUSTMENT. Replace with a new spring.

313. Tape-Guide Spring Adjustment (fig. 172)

a. PREPARATION. None required.

b. REQUIREMENTS. The tape-guide spring should be positioned so that the edge of the spring is parallel to the upper edge of the punch-unit casting. The curved pressure tip should engage the tape at a point opposite the cut-out in the tape guide and should press the tape firmly against the rear side of the guide channel in the punch block without buckling the tape.

c. ADJUSTMENT. Position the spring by means of its mounting screw; bend the spring to provide the required spring pressure.

Note. If the tape guide prevents the tape-guide spring from pressing the tape against the side of the

807975 O - 48 - 13

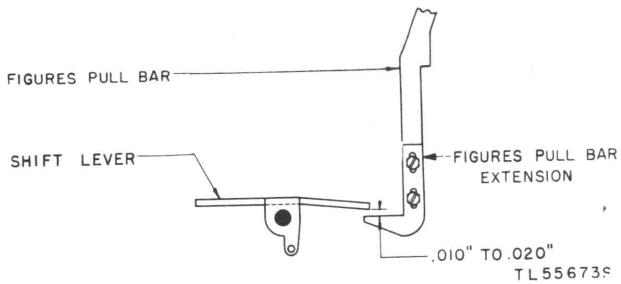

Figure 181. Figures pull-bar requirements.

guide channel in the punch block, add sufficient shims, between the tape-guide mounting post and the perforator main bracket, to just meet the foregoing requirement. Maintain some clearance between the rear edge of the tape guide and the punch-bail.

314. Figures Pull-Bar Adjustment (fig. 181)

a. PREPARATION. None required.

b. REQUIREMENTS. There should be a 0.010-inch to 0.020-inch clearance between the toe on the FIGURES pull-bar extension and the shift lever when the main-shaft clutch is fully disengaged and the shift bell-crank is fully latched in the LETTERS position.

c. ADJUSTMENT. Position the FIGURES pull-bar extension by utilizing its elongated mounting holes.

315. Main-Bail Spring Tension Adjustment

a. PREPARATION. None required.

b. REQUIREMENTS. The printing blow, that is, the force with which the type bars strike the platen, and the force required for shifting the platen shaft assembly from the FIGURES to the LETTERS position, is regulated by the main-bail spring adjusting screw. This spring adjusting screw is located just to the left of the clutch throw-out lever upper pivot screw (See fig. 135.) With the main-shaft clutch disengaged and a 25-pound scale hooked to the spring adjusting lever directly below the spring, it should require not more than 15½ pounds to start the spring adjusting lever moving.

c. ADJUSTMENT. With the motor running, send alternate LETTERS and FIGURES signals to the typing reperforator unit. Back off the main-bail spring adjusting screw until the platen fails to return to the LETTERS position. Then turn the screw in a clockwise direction until the platen just moves to the LETTERS and FIGURES position without any failures. Turn the screw clockwise an additional 1½ turns and tighten the locknut.

316. Main-Bail Cam Clutch Torque Adjustment (fig. 182)

a. PREPARATION. None required.

b. REQUIREMENTS. This torque should be measured after the motor has been running at least 10 minutes with the main-bail cam stationary. Press downward on the main-bail so as to move the main-bail roller away from its cam and at the same time hold the cam-lever roller (if present) and the punch-arm cam

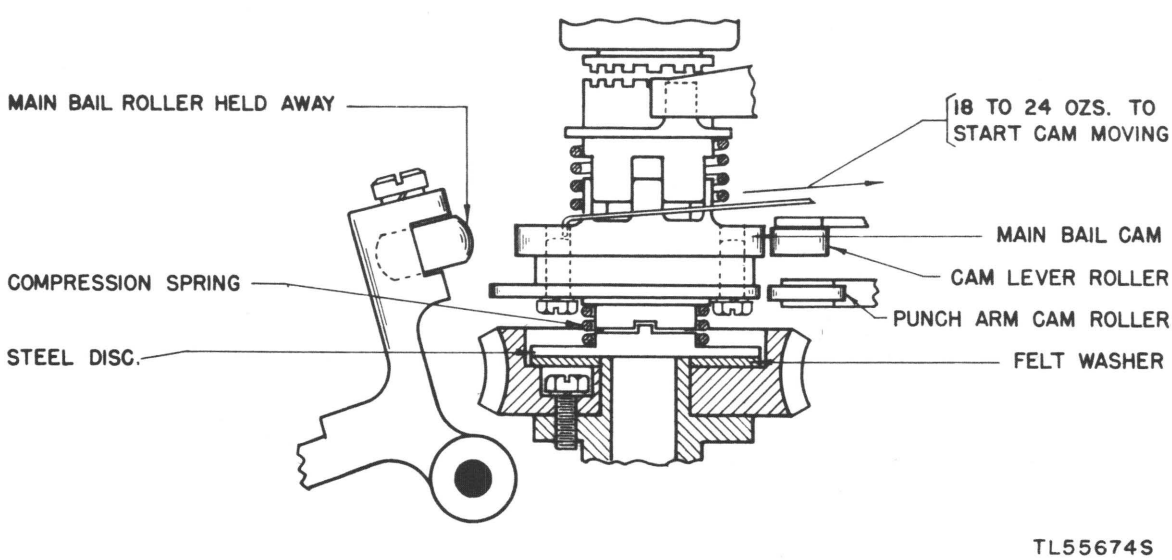

Figure 182. Main-bail cam clutch torque requirements.

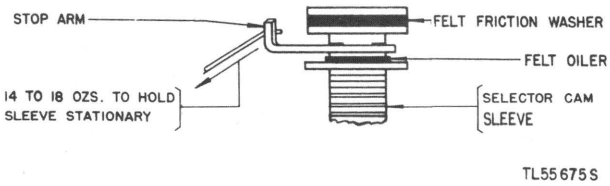

Figure 183. Selector-clutch torque requirements.

roller away from their cams. With a 32-ounce scale hooked into the screw hole on top of the main-bail cam and pulling at right angles to the radius, it should require a pull of 18 to 24 ounces to start the cam moving opposite to its normal direction of rotation.

c. ADJUSTMENT. Replace the felt friction washers, and/or place shims under the compression spring between the compression spring and the steel disk.

317. Selector-Clutch Torque Adjustment (fig. 183)

a. PREPARATION. None required.

b. REQUIREMENTS. This torque should be measured after the motor has been running at least 10 minutes with the selector-cam sleeve stationary. Hook a 32-ounce scale to the selector-cam sleeve stop arm. It should require a pull of 14 to 18 ounces to hold the selector-cam sleeve stationary.

c. ADJUSTMENT. Check the condition of the felt friction washers, and replace when necessary. If specified torque is still not met, adjust the friction-clutch spring by placing the proper amount of shims at the lower end of the spring. *The selector-cam sleeve must be removed from the shaft in order to insert the shims.*

318. Tape Feed-Out Magnet Yoke Adjustment (fig. 184)

a. PREPARATION. None required.

b. REQUIREMENTS. (1) *Armature clearance.* There should be some clearance, but not over 0.015-inch, between the magnet armature and the magnet yoke when the tape feed-out magnet is energized with approximately 0.045 ampere of current.

(2) *Yoke position.* The vertical projection on the magnet yoke should aline with the vertical projection on the magnet.

c. ADJUSTMENT. (1) *Armature clearance.* Add or remove shims between the magnet core and magnet yoke to get the required clearance.

(2) *Yoke position.* Loosen the magnet mounting screw and aline the projections on the yoke and magnet. Recheck after tightening the mounting screws.

319. Tape Feed-Out Magnet Armature Adjustment (fig. 184)

a. PREPARATION. None required.

b. REQUIREMENTS. The magnet armature should be positioned approximately in the center of the adjustment provided by its mounting screw holes.

c. ADJUSTMENT. Position the armature by manually moving it to the required location.

320. Tape Feed-Out Magnet Bracket Adjustment (figs. 154 and 184)

a. PREPARATION. None required.

b. REQUIREMENTS. There should be 0.030-inch to 0.045-inch clearance between the stop lever and the trip latch when the main-shaft is

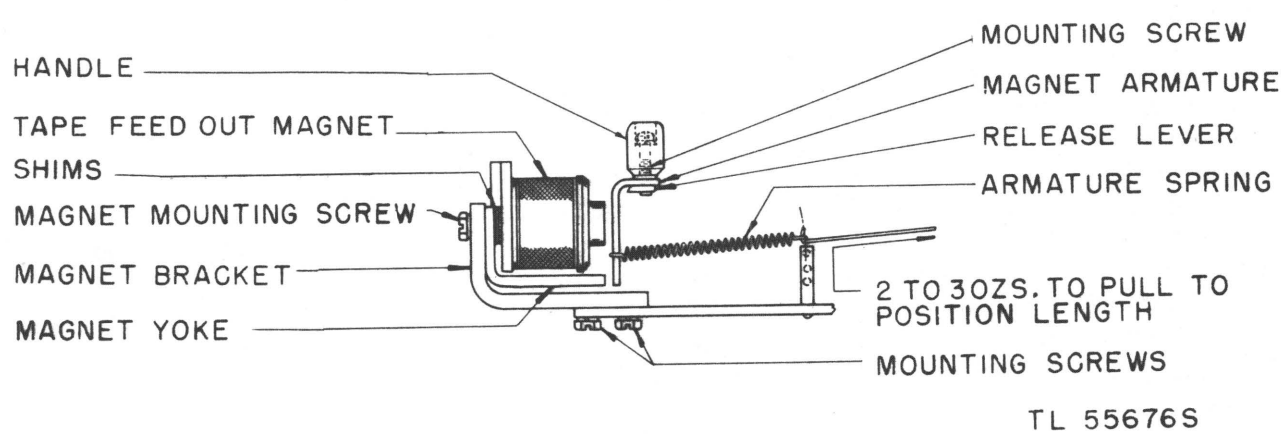

Figure 184. Tape feed-out magnet yoke requirements.

rotated until the latching face of the stop lever is directly below the latching surface of the trip latch and the tape feed-out magnet coil is energized with approximately 0.045 ampere of current. Under these conditions, the face of the magnet armature should be parallel to the ends of the magnet cores.

c. ADJUSTMENT. Position the magnet bracket by utilizing its enlarged mounting holes.

321. Tape Feed-Out Magnet Armature Spring Tension Adjustment (fig. 184)

a. PREPARATION. None required.

b. REQUIREMENTS. Unhook the armature spring from its spring post and hook an 8-ounce scale in the spring eye. With the armature in the unoperated position, it should require 2 to 3 ounces to extend the spring to position length. Rehook the spring.

c. ADJUSTMENT. If the requirements in *b* above are not met, replace with a new spring.

322. Worm-Follower Bail Spring Tension Adjustment (figs. 185 and 186)

a. PREPARATION. Remove the cover from the counter mechanism.

b. REQUIREMENTS. The type of counter unit shown in figure 185, used on typing reperforator units equipped with main-bail roller guides, should meet the following requirement: with the worm follower resting in the bottom of a groove of the worm and the magnet-armature contacts held away from the armature, hook an 8-ounce scale over the end of the armature and pull vertically upward. It should require ½ to 1½ ounces to start the worm follower moving downward away from the worm. The type of counter unit shown in figure 186 should meet the following requirement: remove the magnet-armature spring from the spring post. With the worm follower held in the bottom of a groove in the worm, hook an 8-ounce scale over the armature near the bend and pull vertically upward. It should require 3 to 6 ounces to start the lower armature extension moving away from the worm-follower bail Replace the magnet armature spring. Replace the cover on counter mechanism.

c. ADJUSTMENT. Replace the worm-follower spring.

Note. While taking this spring tension, there should be some clearance between the bottom of the bakelite piece on the No. 4 contact spring and the magnet armature. If necessary, hold the No. 4 contact away from the magnet armature to obtain this clearance.

323. Tape Feed-Out Counter-Magnet Armature Spring Tension Adjustment

a. PREPARATION. Remove the cover from the counter mechanism.

b. REQUIREMENTS. *THIS REQUIREMENT APPLIES ONLY TO COUNTER UNITS HAVING A SPRING ATTACHED TO THE ARMATURE AS SHOWN IN FIGURE* 186. Unhook the worm-follower bail spring. With the worm-follower pin resting in the bottom of a groove in the worm and with some clearance existing between the insulator on the No. 4 contact spring and the magnet armature (hold the No. 4 spring away if necessary), hook an 8-ounce scale under the end of the armature and pull vertically upward. It should require ½ to 1½ ounces to start the magnet armature moving. Rehook the worm-follower bail spring. Replace the cover on the counter mechanism.

c. ADJUSTMENT. Replace with new spring.

324. Worm-Follower Bail Adjustment (figs. 185, 186, and 187)

a. PREPARATION. None required.

b. REQUIREMENTS. The position of the worm-follower bail on the ribbon reverse shaft should be such that the front edge of the extension on the worm-follower bail is approximately in line with the front edge of the magnet-armature extension.

c. ADJUSTMENT. Loosen the worm-follower bail sleeve setscrew and position the sleeve. Be-

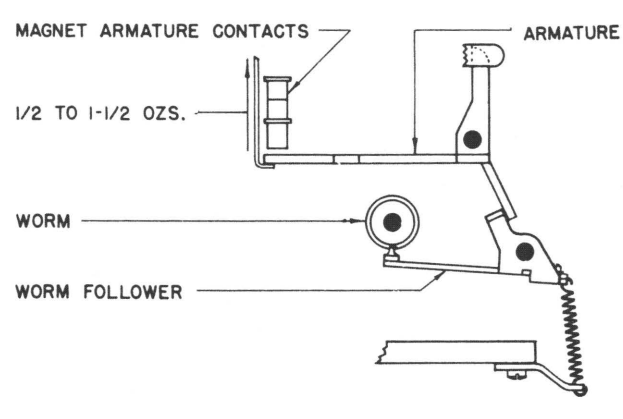

Figure 185. Worm-follower requirements.

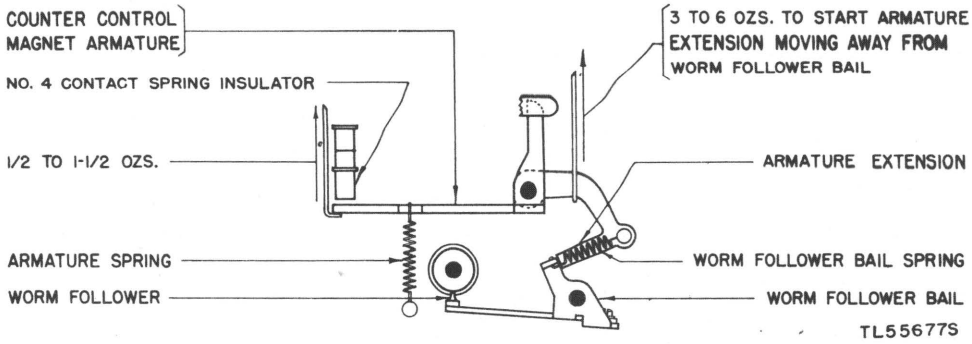

Figure 186. Tape feed-out counter-magnet armature spring tension requirements.

fore tightening the setscrew, position the sleeve so that the setscrew is accessible when a screwdriver is inserted in the space between the code-bar bell-cranks and the extreme right-hand type bar.

325. Worm-Shaft End-Play Adjustment (Tape Counter Mechanism) (fig. 188)

a. PREPARATION. None required.

b. REQUIREMENTS. (1) The worm shaft should be centrally located endwise in its bracket.

(2) The shaft should be free to turn with minimum end play.

c. ADJUSTMENTS. (1) Loosen the worm setscrew and the collar setscrew. Locate the worm shaft centrally with relation to its bracket, then push the worm and the two washers against the rear vertical projection of the bracket and tighten the worm setscrew.

(2) Unhook the worm-shaft spring and position the collar on the shaft by means of its setscrew. Then rehook the spring.

326. Worm-Follower Contact-Springs Adjustment (fig. 189 A)

a. PREPARATION. Remove the worm-follower backstop and cover bracket.

b. REQUIREMENTS. (1) With the push end of an 8-ounce scale applied to the front contact spring near the contact point, it should require 2 to 4 ounces to start the spring moving away from its stiffener.

(2) There should be a gap of 0.015 inch between the contact points.

c. ADJUSTMENT. (1) Remove and bend the front contact spring.

(2) Bend the rear contact spring.

327. Worm-Follower Contact-Bracket Adjustment (fig. 189-B)

a. PREPARATION. None required.

b. REQUIREMENTS. When the worm follower is resting in the groove at the end of the worm, the contact should be closed with some overtravel, but not more than 0.010-inch, measured between the front contact spring and the lower edge of the stiffener.

c. ADJUSTMENT. Position the contact bracket.

328. Tape Feed-Out Counter-Magnet Adjustment (fig. 190)

a. PREPARATION. None required.

b. REQUIREMENTS. When the magnet coil is energized with approximately 0.060 ampere of current, there should be some clearance, but not over 0.015 inch, between the magnet armature and the two ends of the magnet yoke.

c. ADJUSTMENT. Add or remove shims between the magnet mounting core and the magnet yoke.

Note. When tightening the magnet mounting screw, position the magnet so that the magnet terminals are approximately equidistant from the magnet yoke.

329. Tape Feed-Out Counter-Magnet Yoke Adjustment (fig. 191)

a. PREPARATION. None required.

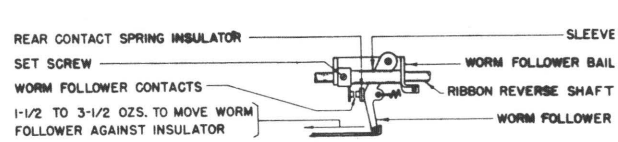

Figure 187. Worm-follower bail requirements.

b. REQUIREMENTS. When the magnet coil is energized with approximately 0.060 ampere of current, the worm follower should clear the high part of the worm by 0.015 inch to 0.030 inch.

c. ADJUSTMENT. Position the magnet yoke by means of its mounting screws.

330. Tape Feed-Out Counter-Magnet Armature Contact Adjustment (fig. 192)

a. PREPARATION. None required.

b. REQUIREMENTS. (1) With an 8-ounce scale hooked to contact spring No. 2 or No. 5 near the contact point, and contact springs No. 1 or No. 4 respectively held upward to clear No. 2 and No. 5 contacts, it should require not less than 2 ounces to start No. 2 or No. 5 contact spring moving away from its stiffener.

(2) When the magnet coil is energized with approximately 0.060 ampere of current, there should be 0.040-inch to 0.050-inch clearance between the contact points of No. 4 and No. 5 contact springs.

(3) With an 8-ounce scale hooked to No. 4 contact spring near the contact point, it should require 1½ to 3 ounces to separate the contact points of No. 4 and No. 5 contact springs.

(4) With an 8-ounce scale hooked to No. 3 contact spring near the contact point, it should require 1½ to 2½ ounces to start the contact spring moving away from its stiffener.

(5) With the magnet armature in its unoperated position, there should be a gap of 0.010 inch to 0.020 inch between the contact points of No. 3 and No. 4 contact springs.

(6) When the magnet coil is energized with approximately 0.060 ampere of current, there should be a gap of 0.010 inch to 0.020 inch between the contact points of No. 1 and No. 2 contact springs.

(7) With the magnet armature in its unoperated position and an 8-ounce scale applied to No. 1 contact spring near the contact point, it should require 1½ to 2½ ounces to separate the contact points of No. 1 and No. 2 contact springs.

c. ADJUSTMENTS. (1) Adjust by bending contact springs No. 2 and No. 5.

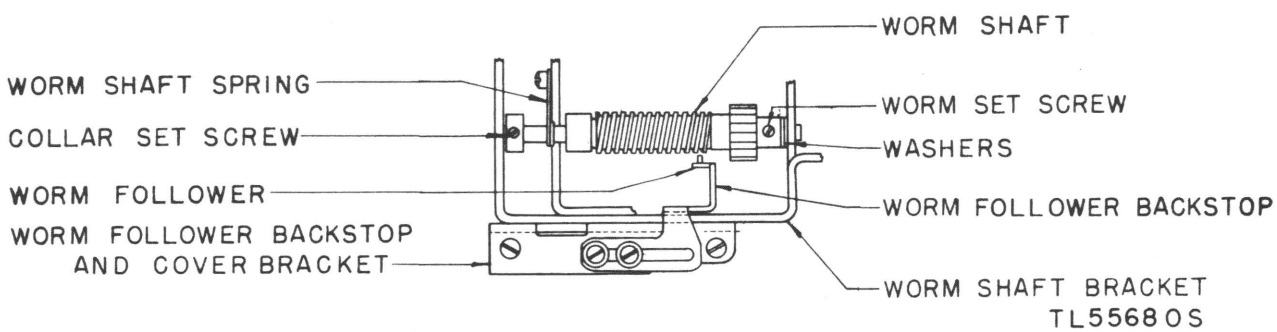

Figure 188. Worm-shaft end-play requirements.

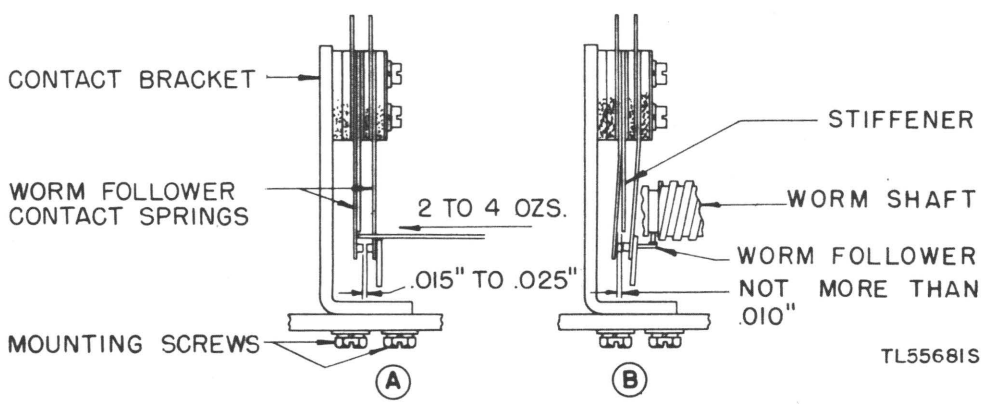

Figure 189. Worm-follower contact-springs requirements.

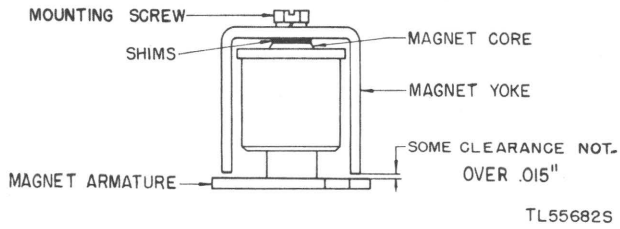

Figure 190. Tape feed-out counter-magnet requirements.

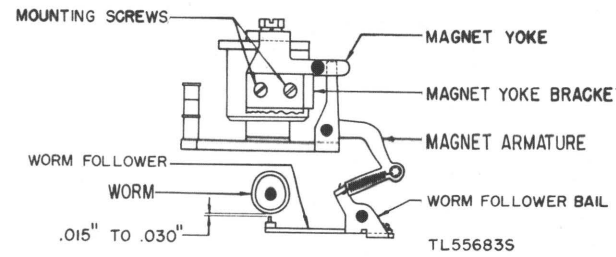

Figure 191. Tape feed-out counter-magnet yoke requirements.

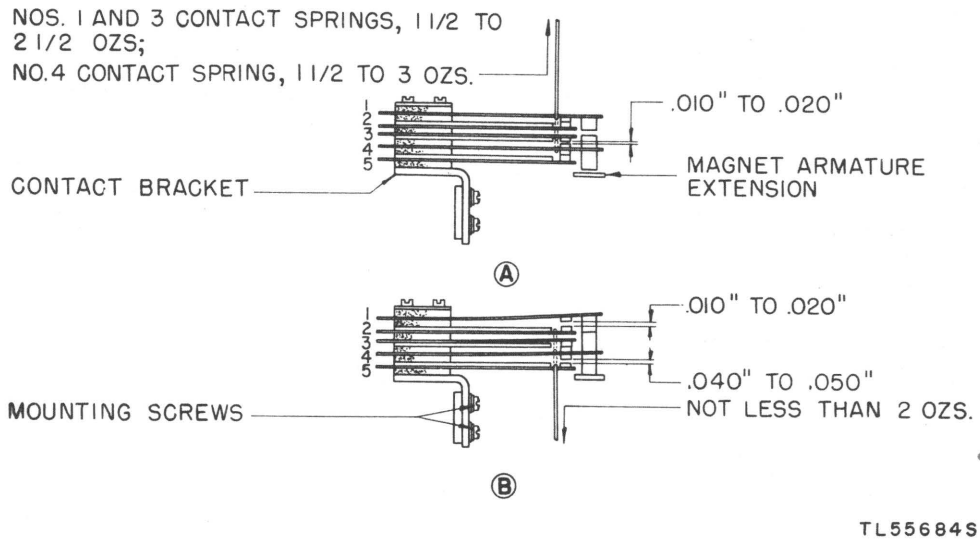

Figure 192. Tape feed-out counter-magnet armature contact requirements.

(2) Position the contact bracket by means of its elongated mounting holes.

(3) Adjust by bending No. 4 contact spring.

(4) Adjust by bending No. 3 contact spring.

(5) Adjust by bending the No. 3 contact-spring stiffener and recheck the contact-spring tension.

(6) Adjust by bending the No. 2 contact-spring stiffener and recheck the contact-spring tension.

(7) Adjust by bending No. 1 contact spring.

Note. FOR REFERENCE PURPOSES, THE CONTACT SPRINGS ARE NUMBERED 1 TO 5 FROM TOP TO BOTTOM. (SEE FIGURE 192.)

331. Worm-Follower Backstop Adjustment (figs. 188 and 191)

a. PREPARATION. None required.

b. REQUIREMENTS. The worm-follower contact should close with not less than 140 operations of the cam lever.

c. ADJUSTMENTS. Proceed as follows: (1) Position the worm-follower backstop as far toward the rear on its bracket as the elongated mounting holes will permit. Hold the magnet armature in its operated position in order to fully return the worm follower. In this position the worm follower should rest against its backstop. If it does not, move the backstop forward until it just touches the worm follower.

(2) Rotate the main-shaft to a position where the manual operation of the cam lever will advance the worm-shaft ratchet one tooth at a time. With the worm follower in its rearmost position, operate the cam lever by pressing toward the left, at its forward end. Continue to operate the cam lever and count the number of operations until the worm-follower contacts just close. It should require not less than 140 operations to accomplish the contact closure. If less than 140 operations are required, recheck the worm-follower bail adjustment (par. 324) and readjust the worm-follower backstop.

332. Worm-Follower Spring Tension Adjustment (Tape Counter Mechanism) (fig. 187)

a. PREPARATION. None required.

b. REQUIREMENTS. With the worm-follower bail held so that the worm-follower pin is away from the worm, hook an 8-ounce scale over the end of the worm follower and pull approximately parallel to the spring. It should require 1½ to 3½ ounces to move the worm-follower against the insulator of the rear contact spring.

c. ADJUSTMENT. Replace with a new spring.

333. Worm Feed-Pawl Spring Tension Adjustment (fig. 193)

a. PREPARATION. None required.

b. REQUIREMENT. With the cam lever on the high part of its cam, hook an 8-ounce scale over the end of the feed-pawl at the spring hole and pull in line with spring. It should require 3 to 5½ ounces to start the pawl moving.

c. ADJUSTMENT. Replace with a new spring.

334. Cam-Lever Spring Tension Adjustment (fig. 194)

a. PREPARATION. None required.

b. REQUIREMENTS. With the cam-lever roller on the low part of its cam, hook a 64-ounce scale over the cam lever at the spring hole and pull in line with the spring. It should require 28 to 38 ounces to start the lever moving.

c. ADJUSTMENT. Replace with a new spring.

335. Push-Button Contact Gap Adjustment (fig. 195-A)

a. PREPARATION. None required.

b. REQUIREMENTS. There should be a 0.010-inch to 0.050-inch gap between contact points when push button is held fully depressed.

c. ADJUSTMENT. Bend the contact-spring stiffener.

336. Push-Button Contact Spring Tension Adjustment (fig. 195)

a. PREPARATION. None required.

b. REQUIREMENTS. (1) With the push end of an 8-ounce scale applied to the shorter contact spring directly above the contact point, it should require a push of 3½ to 6 ounces, applied as nearly horizontally as possible, to start the contact spring moving away from its stiffener. (See fig. 195.)

(2) With the push end of an 8-ounce scale applied to the head of the push button, it should require a push of 4 to 8 ounces to separate the contacts. (See fig. 195).

c. ADJUSTMENTS. (1) Adjust by bending the shorter contact spring.

(2) Adjust by bending longer contact spring.

337. Pull-Bar Lock-Out Lever Adjustment (figs. 196 and 197)

a. PREPARATION. None required.

b. REQUIREMENTS. With the platen in the FIGURES position and the BELL pull-bar selected, rotate the main-shaft to a point where the main-bail is approximately 0.010-inch below the BELL pull-bar notch. There should then be a 0.010-inch to 0.040-inch clearance between the side of the BELL pull-bar and the pull-bar locknut lever roller, and the S pull bar should be cammed out of the code-bar slot by 0.004 inch to 0.020 inch. Place the carriage in its LETTERS position. With the BELL combination set up, rotate the main-shaft until the

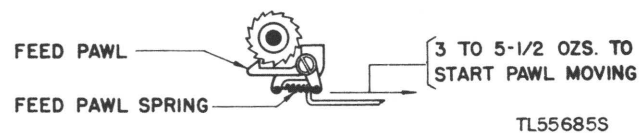

Figure 193. Worm feed-pawl spring tension requirements.

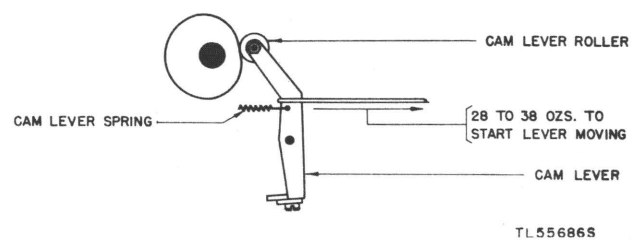

Figure 194. Cam-lever spring tension requirements.

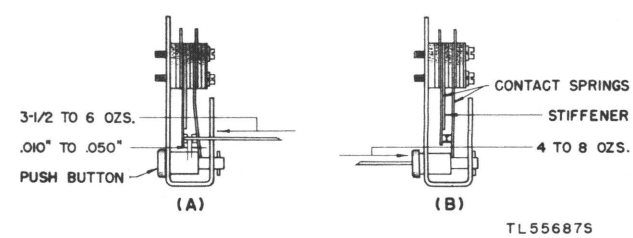

Figure 195. Tape feed-out push-button contact gap requirements.

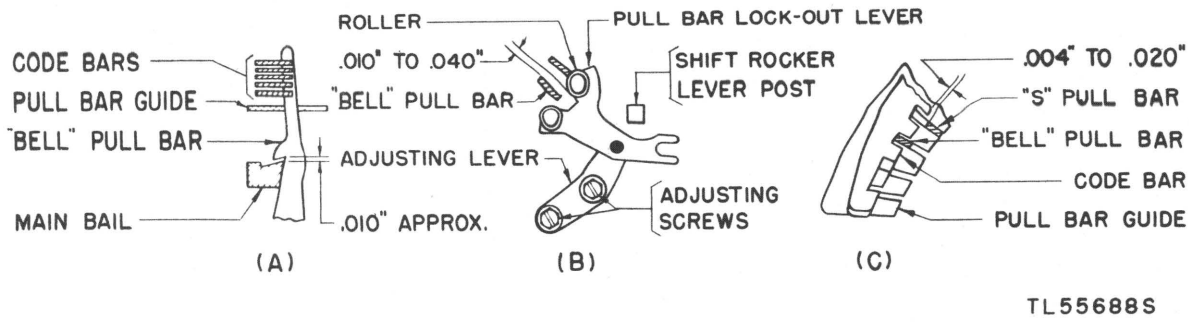

Figure 196. Signal bell pull-bar lock-out lever requirements. (FIGURES position).

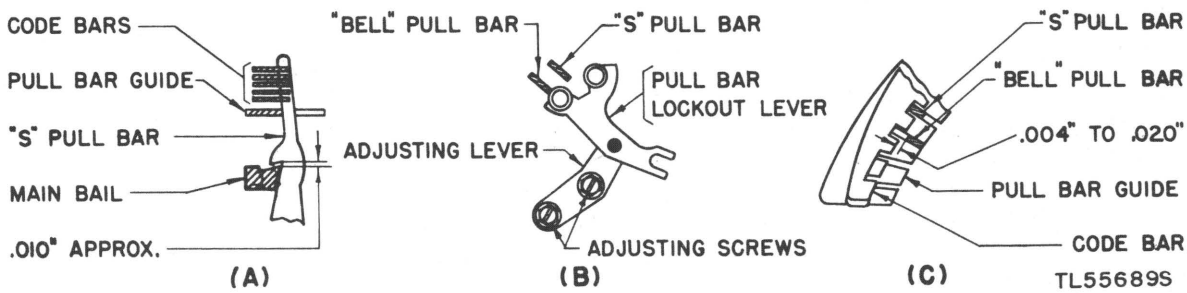

Figure 197. Signal bell pull-bar lock-out lever (LETTERS position) requirements.

main-bail is moved to within approximately 0.010-inch of the notch in the S pull-bar. The BELL pull-bar should be cammed out of the code-bar slot by 0.004 inch to 0.020 inch.

c. ADJUSTMENT. To meet these requirements, position the adjusting lever by utilizing the play in its mounting holes.

338. Bell-Hammer Post Adjustment

a. PREPARATION. None required.

b. REQUIREMENTS. With the bell pull-bar selected and the main-bail at its highest point, the tip of the bell pull-bar toe should be in line with the outside surface of the bell hammer.

c. ADJUSTMENT. Check this adjustment by holding the bell-hammer spring to one side and sighting along the side of the bell hammer. Position the bell-hammer post.

339. Bell-Hammer Eccentric-Screw Adjustment (fig. 198)

a. PREPARATION. None required.

b. REQUIREMENTS. (1) Units which do not have a type bar associated with the bell pull-bar should be adjusted as follows: with the bell pull-bar selected and the main-bail in its uppermost position, there should be a clearance of 0.065 inch to 0.085 inch between the bell-hammer lip and the bell-hammer post.

(2) Units in which a type bar is operated by the bell pull-bar should be adjusted as follows: with the bell pull-bar selected, there should be a clearance of 0.020 inch to 0.040 inch between the bell-hammer lip and the bell-hammer post when the bell-type bar is held against the platen.

c. ADJUSTMENT. Loosen the bell-hammer eccentric screw and move the bell hammer until the proper clearance between the bell-hammer lip and the bell-hammer post is obtained. Tighten the eccentric screw being careful not to change the clearance.

340. Signal Bell Adjustment

a. PREPARATION. None required.

b. REQUIREMENTS. The signal bell should be positioned so as to obtain the most satisfactory bell tone.

c. ADJUSTMENT. Loosen the bell mounting screw and utilize the slotted hole in the bell mounting bracket to position the bell. When adjusted there should be at least 0.004-inch clearance between the bell and the tape platform or chute, and at least 0.010-inch clearance between the bell and the bell-bracket

mounting screw, the left ribbon-spool bracket and the handle on the left side of the unit.

341. Worm-Shaft End Play (End-of-Line Indicator) (fig. 199)

a. PREPARATION. None required.

b. REQUIREMENTS. The worm-shaft should be free to rotate, with a minimum amount of end play, when the worm-shaft spring is detached from the contact bracket.

c. ADJUSTMENT. Loosen the setscrew. Position the collar to meet this requirement and tighten the setscrew.

342. Lamp Contact Adjustment (fig. 199)

a. PREPARATION. None required.

b. REQUIREMENTS. (1) With the push end of and 8-ounce scale applied to the front contact spring near the contact point, it should require 3 to 4 ounces to start the spring moving away from its stiffener.

(2) There should be a gap of 0.015 inch to 0.025 inch between the contacts.

c. ADJUSTMENTS. (1) Remove the spring from the contact assembly and bend.

(2) Bend the rear contact spring.

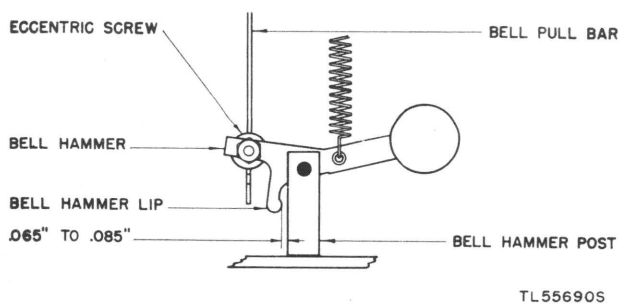

Figure 198. Bell-hammer eccentric-screw requirements.

343. Contact Bracket Adjustment (End-of-Line Indicator) (fig. 200)

a. PREPARATION. None required.

b. REQUIREMENTS. With the worm-follower resting in the groove at the front end of the worm shaft, the lamp contacts should be closed and there should be a 0.010-inch to 0.020-inch clearance between the front lamp contact spring and the lower end of its stiffener.

c. ADJUSTMENT. Position the contact bracket by means of its mounting screw.

344. Worm-Follower Adjustment (fig. 199)

a. PREPARATION. None required.

b. REQUIREMENTS. The lamp contacts should not close until the 62d operation of the reperforator. They should close after the 62d and before the 67th operation, when the reperforator is operated under power.

c. ADJUSTMENT. Rotate the main-shaft to a position where the manual operation of the cam lever will advance the worm-shaft ratchet one tooth at a time. With the worm-follower in its rearmost position, operate the cam lever by pressing toward the left at its forward end until the pin on the worm follower just enters a thread on the worm. Continue to operate the cam lever 62 additional times. Then adjust the position of the release bail by means of the sleeve and the adjusting-bracket mounting screws so that the contacts just close. *CHECK THE ADJUSTMENT SEVERAL TIMES WITH THE REPERFORATOR OPERATING UNDER POWER.*

345. Worm-Follower Spring Tension (End-of-Line Indicator) (fig. 201)

Refer to paragraph 332 and figure 201 for the

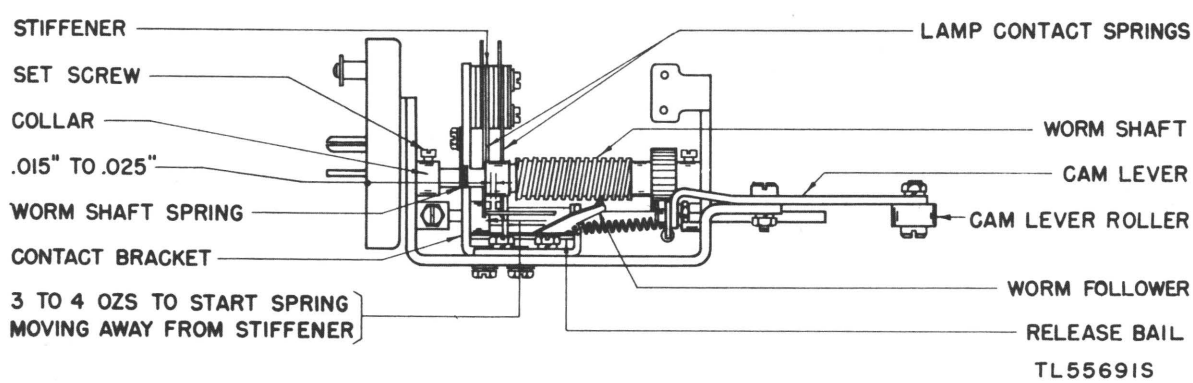

Figure 199. Worm-shaft end-play requirements.

requirements and adjustment of the worm-follower spring, which is part of the mechanical end-of-line indicator mechanism.

346. Release-Bail Spring Tension Adjustment (fig. 202)

a. PREPARATION. None required.

b. REQUIREMENTS. Hook a 32-ounce scale over the edge of the release-bail near the spring hole, and pull upward. It should require 7 to 11 ounces to start the bail moving.

c. ADJUSTMENT. Replace with a new spring.

347. Feed-Pawl Spring Tension Adjustment (End-of-Line Indicator) (fig. 193)

a. PREPARATION. None required.

b. REQUIREMENTS. Move the cam-lever roller to the high part of the main-bail cam. Hook an 8-ounce scale over the end of the feed-pawl at the spring hole and pull in line with the spring. It should require 3 to 5½ ounces to start the feed-pawl moving.

c. ADJUSTMENT. Replace with a new spring.

348. Ribbon-Lift Lever Spring Tension Adjustment (fig. 203)

a. PREPARATION. None required.

b. REQUIREMENTS. Hook a 32-ounce scale under the ribbon-lift lever directly below the spring hole and pull vertically upward. It should require at least 28 ounces to start the lever moving.

c. ADJUSTMENT. Replace with a new spring.

349. Backspace-Lever Spring Tension Adjustment (fig. 204)

a. PREPARATION. None required.

b. REQUIREMENTS. Hook an 8-ounce spring scale beneath the rear extension of the backspace lever at the back side of the main bracket and pull upward at a right angle to the lever. It should require 1 to 2½ ounces to start the lever moving.

c. ADJUSTMENT. Replace with a new spring.

350. Backspace Feed-Pawl Spring Tension Adjustment (fig. 204)

a. PREPARATION. None required.

b. REQUIREMENTS. Hook an 8-ounce scale over the end of the backspace feed pawl and pull in line with the spring. It should require ½ to 1½ ounces to start the feed-pawl moving.

c. ADJUSTMENT. Replace with a new spring.

351. Feed-Pawl Spring Tension Adjustment (Backspace Mechanism) (fig. 205)

a. PREPARATION. None required.

b. REQUIREMENTS. With the main-bail cam in the stop position, hook an 8-ounce scale over the feed-pawl just above the curved bearing portion shown in the figure and pull horizontally toward the left. It should require 2 to 4 ounces to start the feed-pawl moving away from the feed roll.

c. ADJUSTMENT. Replace with a new spring.

Note. The backspace mechanism should be capable of backspacing a length of tape containing 72 characters of regular text matter with one LETTERS combination after each 9 characters by consecutively depressing the backspace lever 72 times. The tape should not buckle or be damaged by the backspace operation. It may be necessary to refine the adjustment of the punch-bail upstop screw (par. 296) or to remove dirt and burrs from the parts.

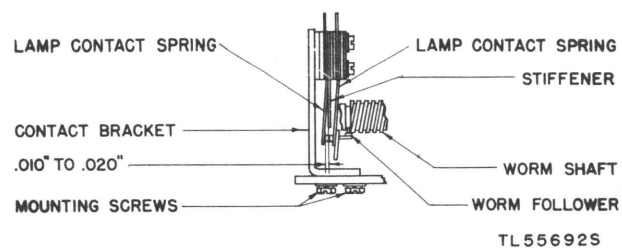

Figure 200. Contact-bracket requirements.

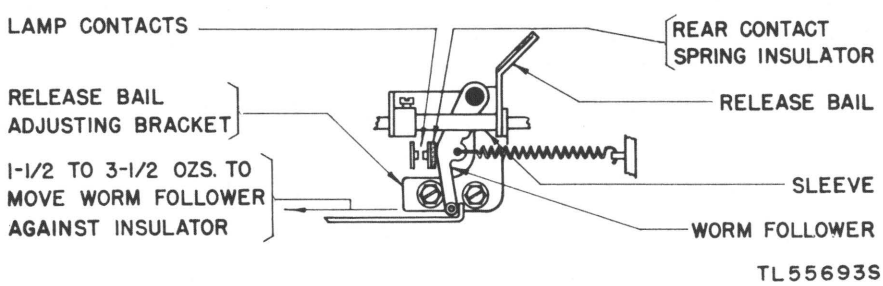

Figures 201. Worm-follower spring tension requirements.

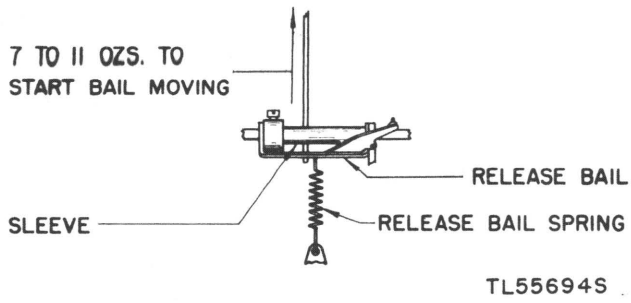

Figure 202. Release-bail spring requirements.

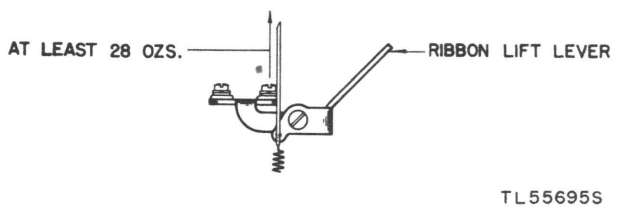

Figure 203. Ribbon-lift lever spring tension requirements.

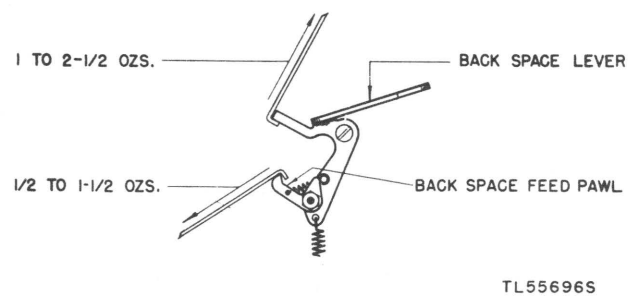

Figure 204. Backspace-lever spring tension requirements.

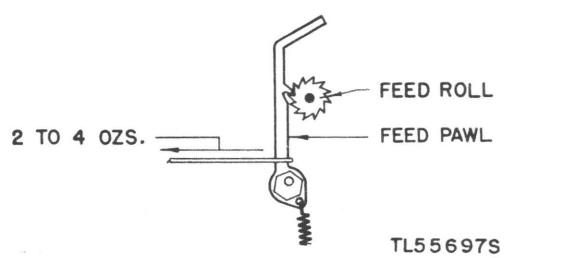

Figure 205. Feed-pawl spring tension requirements.

352. Contact-Springs Adjustments (Main-Shaft Clutch Throw-Out Lever) (fig. 206)

a. PREPARATION. Remove the bracket and spring assembly from the selector mounting plate.

b. REQUIREMENTS. (1) When an 8-ounce scale is hooked over the end of each short contact-spring at the contact point and pulled horizontally at right angles to the springs, it should require ½ to 2 ounces to start the short contact-springs moving away from their stiffeners.

(2) There should be a gap of 0.015-inch between each pair of contact points.

c. ADJUSTMENTS. (1) Bend the short contact-springs. Tension of the contact-spring may be increased either by removing the spring from the pile-up and bending, or by inserting a bank pin between the spring and the stiffener near the clamped ends and squeezing the spring and the stiffener together with pliers.

(2) Bend the long contact-springs.

353. Contact-Bracket Position Adjustment (Main-Shaft Clutch Throw-Out Lever) (fig. 206)

a. PREPARATION. None required.

b. REQUIREMENTS. Move the clutch throw-out lever to the high part of the driven clutch member, hook an 8-ounce scale over the end of each short contact spring at the contact point, and pull at right angles to the spring. It should require a pull of not less than ½-ounce to separate each contact point.

c. ADJUSTMENT. Loosen the contact-bracket mounting screws and position the bracket. Tighten the mounting screws.

Note. With the main-shaft in its stop position, there should be some clearance between the clutch throw-out lever and the insulator of the long contact spring. If this requirement cannot be met it will be necessary to remake adjustment 2 of the contact spring adjustments (par. 352) by bending the short contact spring with its stiffener and then bending the long contact spring to meet the specified requirements. Then check adjustment 1 of the contact spring adjustments (par. 352).

354. Starting-Switch Adjustments (Synchronous Motor Only) (fig. 207)

a. PREPARATION. Remove the motor unit from the base and remove the motor fan and pinion. Remove the switch end-shield screws and the switch commutator mounting screw, also the switch end shield. Pull out the rotor until the brush-holder spring is accessible and remove the spring.

b. REQUIREMENTS. (1) Using an 8-ounce scale, spring tension for 50- and 60-cycle motors should be 1½ to 2½ ounce, and 3 to 3¾ ounces respectively when extended to a length of 5 inches.

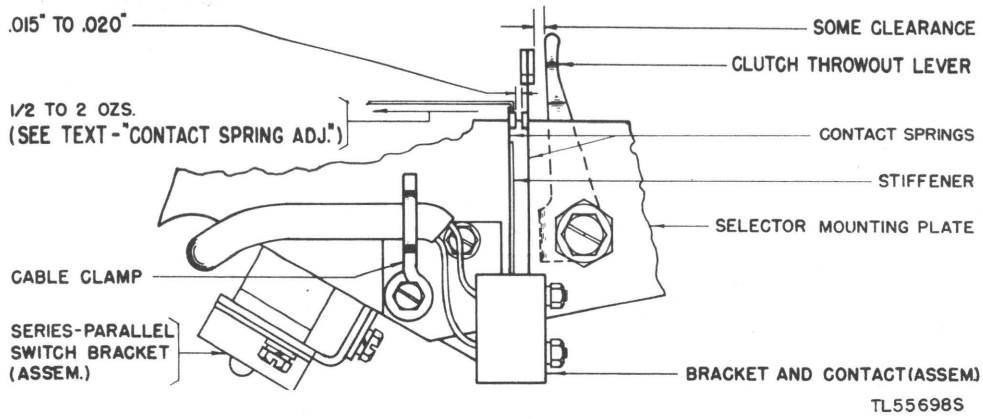

Figure 206. Contact-spring requirements.

(2) The brush holders should be mounted by means of the center set of mounting holes and should be free.

(3) The brush-holder stop pins should be safely within the holes of the fiber disk when all the play in the brush holders has been taken up to make the engagement of the pins with the disk a minimum.

(4) Replace the brush-holder spring, making certain that the spring eyes are fully engaged with each other.

(5) Replace the switch commutator screws and tighten the two screws alternately, a little at a time, until both screws are tight.

(6) Replace the switch end-shield screws, using the same precaution in tightening as above.

(7) Apply the push end of a 12-pound scale against the fan end of the shaft and push parallel with the shaft. It should require at least 7 pounds pressure to start the shaft moving. This applies to a-c, d-c, and synchronous motors.

c. ADJUSTMENTS. Replace the motor fan and pinion. Replace the motor unit on the base and check the motor-plate adjustment. If the springs do not meet the requirements given in *b* above, replace the springs.

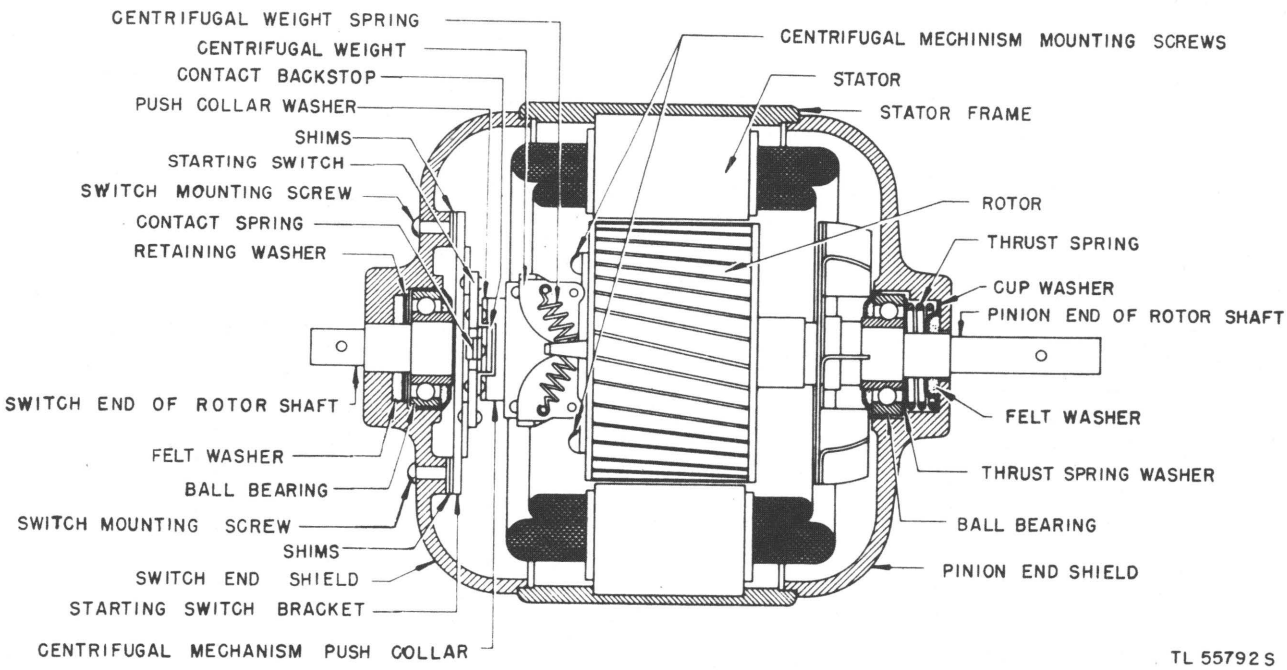

Figure 207. Cross-section of synchronous motor.

BOOK II

NONTYPING REPERFORATORS

PART ONE

INTRODUCTION

Section I. DESCRIPTION

355. General

a. The teletype model 14 (RPE26) nontyping reperforator is a motor-driven machine that receives messages in the form of electrical impulses and records the message in code perforations on paper tape.

b. This equipment is normally connected to other teletypewriter equipment and is not capable of operating except when used with other equipment. In general use, the RPE26 nontyping reperforator is used in conjunction with fixed plant (signal center) installations as monitor sets.

c. Unlike the typing reperforators discussed in book 1, the RPE26 nontyping reperforators are constructed as a single unit. The motor unit, relay, and all the mechanical parts necessary for translating electrical impulses into code perforations on tape are mounted on a common base.

d. Code designations identifying model 14 (RPE26) nontyping reperforators include the use of (fixed plant) and the make or type of motor (General Electric, governed series or synchronous). For the code designations of the various motor units refer to table I in book 1.

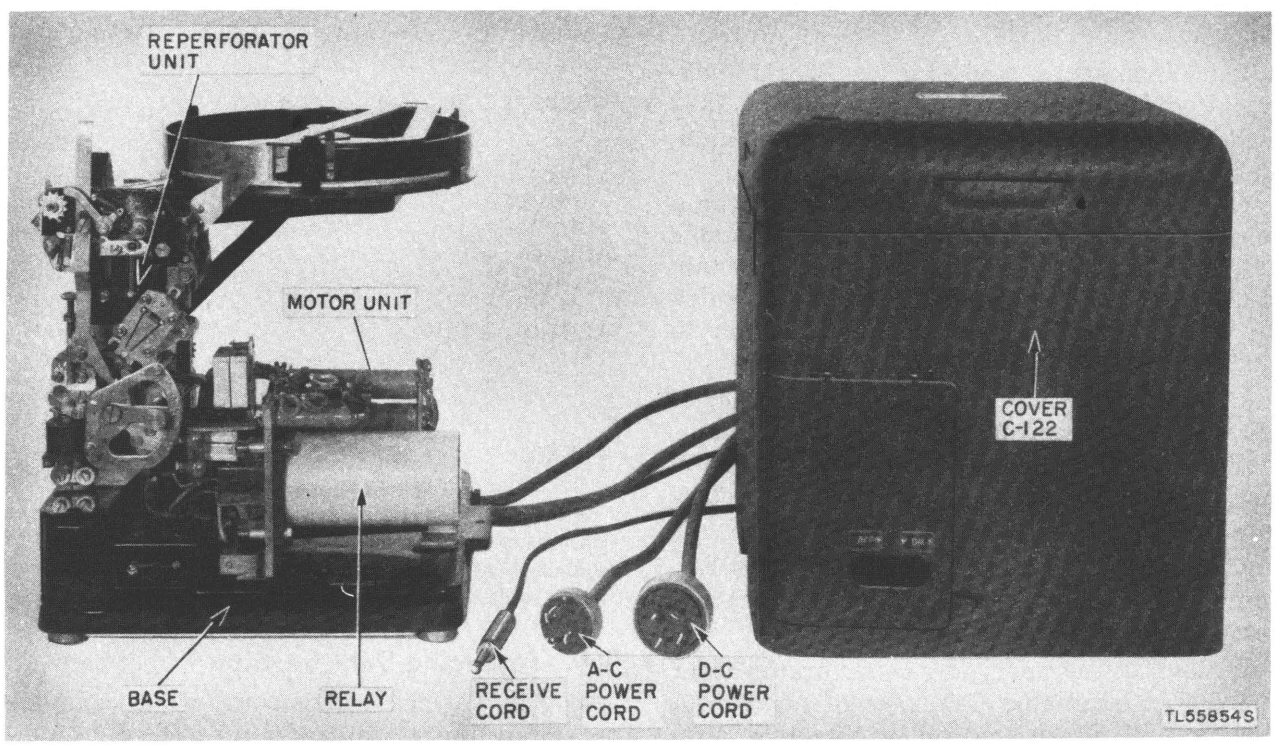

Figure 208. Model 14 (RPE26) nontyping reperforator, complete with cover.

c. Description information and detailed maintenance and repair instructions for model 14 (RPE26) nontyping reperforators are covered in this technical manual. Planning data, installation procedures, and operating features are given in technical manuals covering the teletypewriter set or system of which the nontyping reperforator is a part (or associated feature); these related technical manuals are referenced throughout this manual.

f. Many details concerning certain parts or assemblies of nontyping reperforators are the same as those given in book 1 for similar parts or assemblies included in typing reperforators. Where such information is identical, references are made to the appropriate sections of book 1.

356. Model 14 (RPE26) Nontyping Reperforator

a. GENERAL. (1) The two principal models of RPE26 nontyping reperforators covered in this manual are the RPE26H and RPE26N. These model 14 nontyping reperforators are used as monitor sets with fixed plant teletypewriter equipment, such as Teletypewriters TT–7/FG and TT–8/FG and other model 19 teletypewriter sets, and as the receiving unit of a nontyping reperforator transmitter distributor set.

(2) When set up ready for use, RPE26 nontyping reperforators are approximately 13½ inches long, 13¼ inches wide, 15 inches high, and weigh approximately 40 pounds.

(3) In normal use, the RPE26 nontyping reperforator is mounted on a bench or table near the associated equipment, or on a small, metal table, castormounted, (fig. 209) which can be moved from one machine location to another.

b. BASE. The base is constructed of metal and contains mounting surfaces for the frame, motor unit, line relay, and the other parts and mechanisms. The internal wiring of the reperforator is contained in the base.

c. MOTORS. The motors supplied with RPE26 nontyping reperforators are the same as those described in paragraph 1.

d. COVER. The nontyping reperforator cover (fig 208), designated C–122, is of metal construction. A lid on the top of the cover lifts up so that the nontyping reperforator mechanism may be inspected without removing the cover, and a door on the front of the cover permits access to the selector unit so that the range finder may be set without removing the cover.

357. Message Tapes

Messages received by the nontyping reperforator are recorded on *regular perforated tape.* (See fig. 21.) Regular perforated tape is tape in which small pieces of the paper or chads are completely removed from the tape, leaving a clean, round hole.

358. Differences in Models

The only major differences in model 14 nontyping reperforators are in the motor units and associated gears. Certain parts may be constructed from different materials but the general description and function of these parts remain the same. Table V shows the relationship between the motors and their associated gears.

359. Table of Components

The principal units with their associated Signal Corps stock numbers are listed below:

Signal Corps stock No.	Item	Remarks
4TRPE26	Reperforator unit (nontyping)	
4TMU4, 4TMU27	Motor unit	Motors may be either governed series or synchronous.
4TC122	Cover	
4TRT34	Table	Supplied for use with model 19 teletypewriter sets.
4TRY30	Line relay	

Note. This list is for general information only. See appropriate publications for information pertaining to requisition of spare parts. Stock numbers are indicated in this table for identification purposes only.

360. Packaging Data for Export Shipment

a. The various components of a complete nontyping reperforator set are packed as individual units and placed in a watertight metal

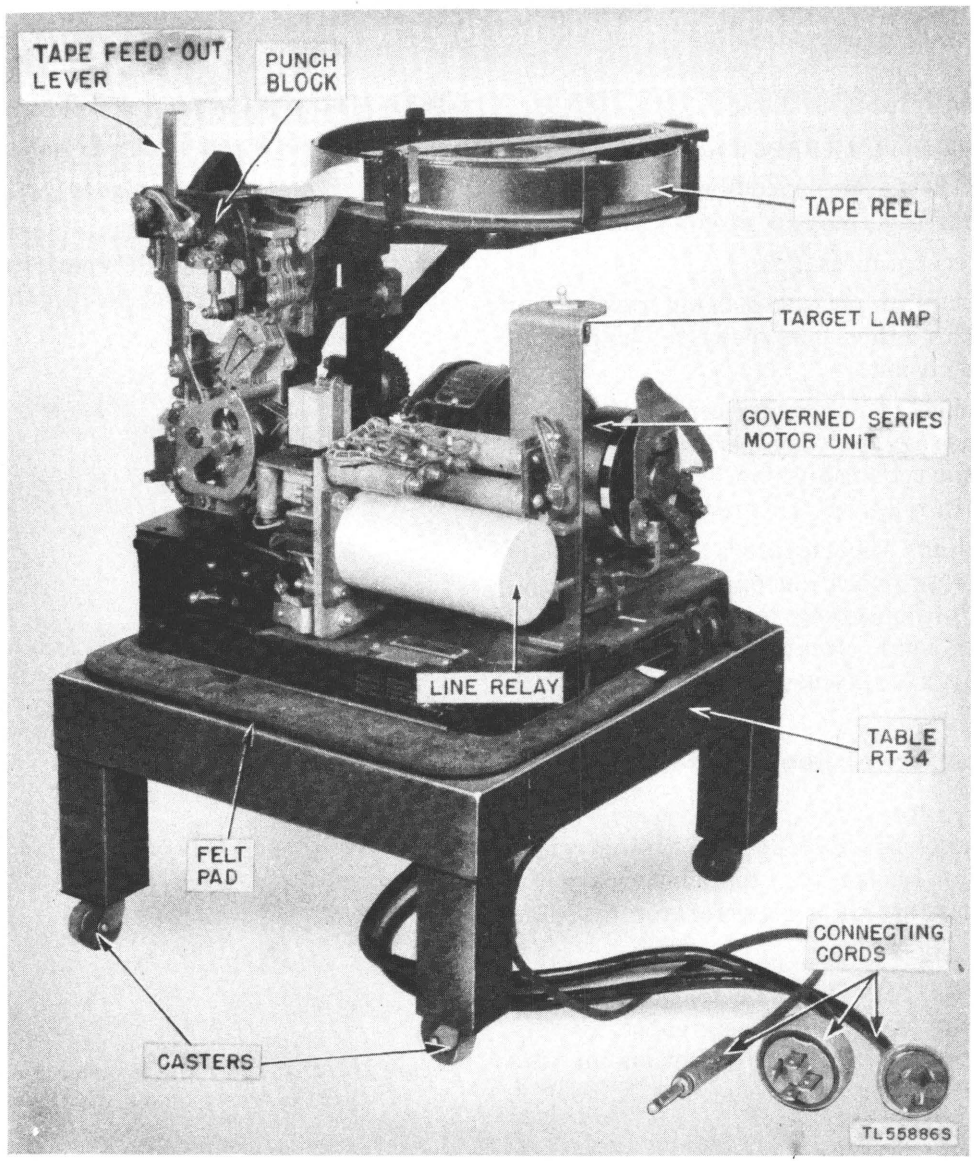

Figure 209. Model 14 (RPE26) nontyping reperforator, mounted on metal table

container, which in turn is packed in a wooden box. Refer to section I, book 1, for the details of packing instructions.

b. The chart below furnishes data obtained from one particular shipment and may be used as a guide.

Note. Items may be packaged in a different manner from that shown, depending upon supply channels.

Contents of package	Outside dimensions (in.)	Volume (cu. ft.)	Gross weight (lb.)
Reperforator unit RPE26	16¼x16¼x14	2.14	72
Motor Unit MU27	10½x8¼x6¾	0.34	24
Cover C-122	13½x12½x12¼	1.20	18
Table RT34	14¼x12¼x6	0.61	14
Miscellaneous parts	8x10x5	0.23	6

Section II. APPLICATION

361. General

a. The model 14 (RPE26) nontyping reperforator, which is a major component of several teletypewriter sets, may be used as follows:

(1) To receive messages.

(2) To monitor messages being received or transmitted by other teletypewriter equipment in the same circuit.

b. The model 14 nontyping reperforator records the message in code perforations which permits rapid retransmission by a transmitter distributor if relay of the message is desired.

c. Nontyping reperforators are normally wired for relay operation on neutral line signals. Model 14 nontyping reperforators may be operated on polar circuits by making minor wiring changes as discussed in paragraph 408.

362. Use as Part of Reperforator Distributor Set

a. The model 14 (RPE26) nontyping reperforator and a transmitter distributor are the major components of a reperforator distributor set (fig. 209).

b. Refer to TM 11–2222, for information concerning the transmitter distributor. For information concerning the operation of the RPE26 reperforator refer to section X, book 2.

363. Use as Monitor for Teletypewriters TT-7/FG and TT-8/FG and Other Model 19 Teletypewriter Sets (fig. 211)

a. The model 14 (RPE26) nontyping reperforator is not part of Teletypewriters TT–7/FG and TT–8/FG but is used with this equipment

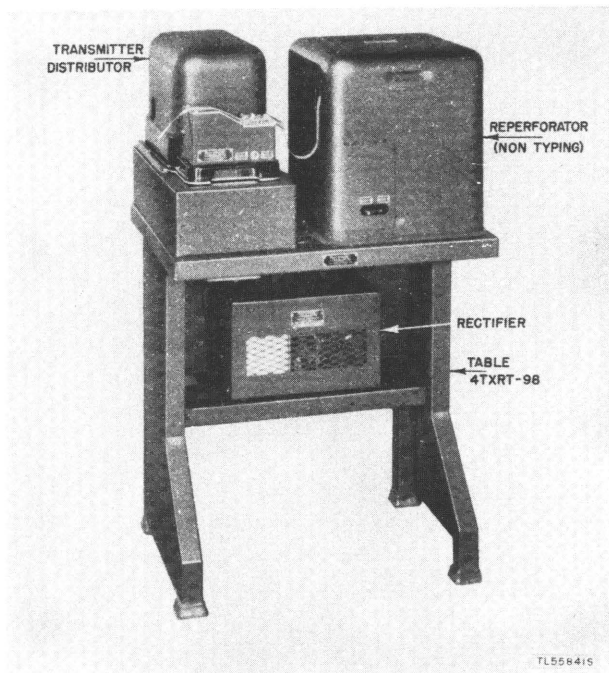

Figure 210. Model 14 (RPE26) nontyping reperforator, part of reperforator distributor set.

Table V. Principal differences in motors, gears, targets, etc., used with nontyping reperforators

Motor		Gear		Pinion		Target		Speed		Tuning fork		Governor contact filter
Part No.	Type	Part No.	Teeth	Part No.	Teeth	Part No.	Spots	Opm	Motor rpm	Part No.	Vps	Part No.
82283	60-cycle a-c synchronous	78509	30	78510	7			368	1800			
82714	50-cycle a-c synchronous	84065	25	84064	7			368	1800			
77953	A-c governed series	73106	35	71974	7	7105	10	368	1800	72634	87.6	99250
72586	D-c shunt	73106	35	71974	7	7105	10	368	1800	72634	87.6	72566

and other model 19 teletypewriter sets as a monitor. The model 14 (RPE26) nontyping reperforator records all messages transmitted or received on the circuit either for record purposes or for retransmission.

b. The model 14 (RPE26) nontyping reperforator may also be used to receive urgent messages on one circuit when the associated teletypewriter equipment is operating on another circuit or is otherwise unavailable.

c. Refer to TM 11–2216 for information on Teletypewriters TT–7/FG and TT–8/FG.

364. Functioning of Receiving Mechanism

The general functioning of the receiving mechanism (fig. 212) of the nontyping reperforator is the same as that discussed under the functioning of the receiving mechanism of typing reperforators. The teletypewriter code impulses are translated by the receiving mechanism of the nontyping reperforator into corresponding perforations in the message tape. This differs from the typing reperforator which translates the impulses into both printed characters and code perforations on the message tape.

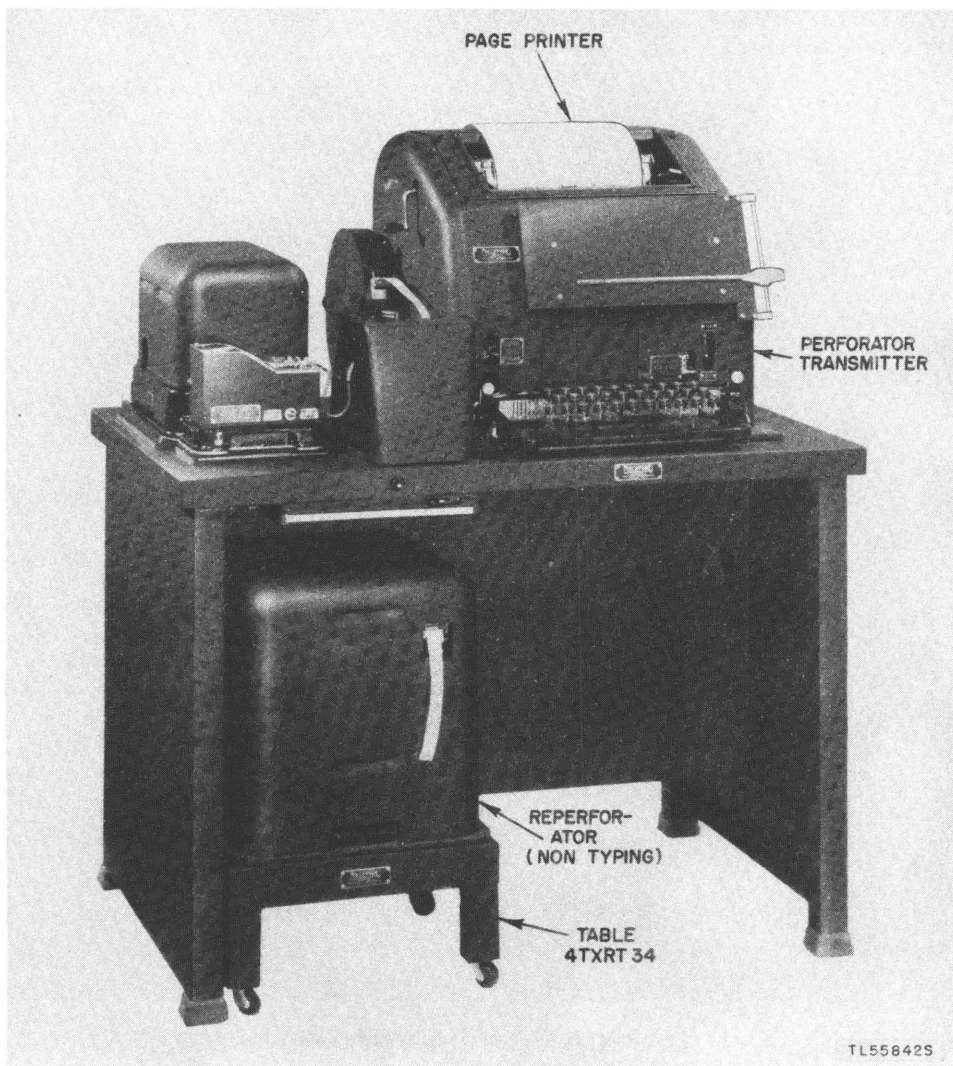

Figure 211. Model 14. (RPE26) nontyping reperforator used as monitor for Teletypewriters TT-7-/FG and TT-8/FG and other model 19 teletypewriter sets.

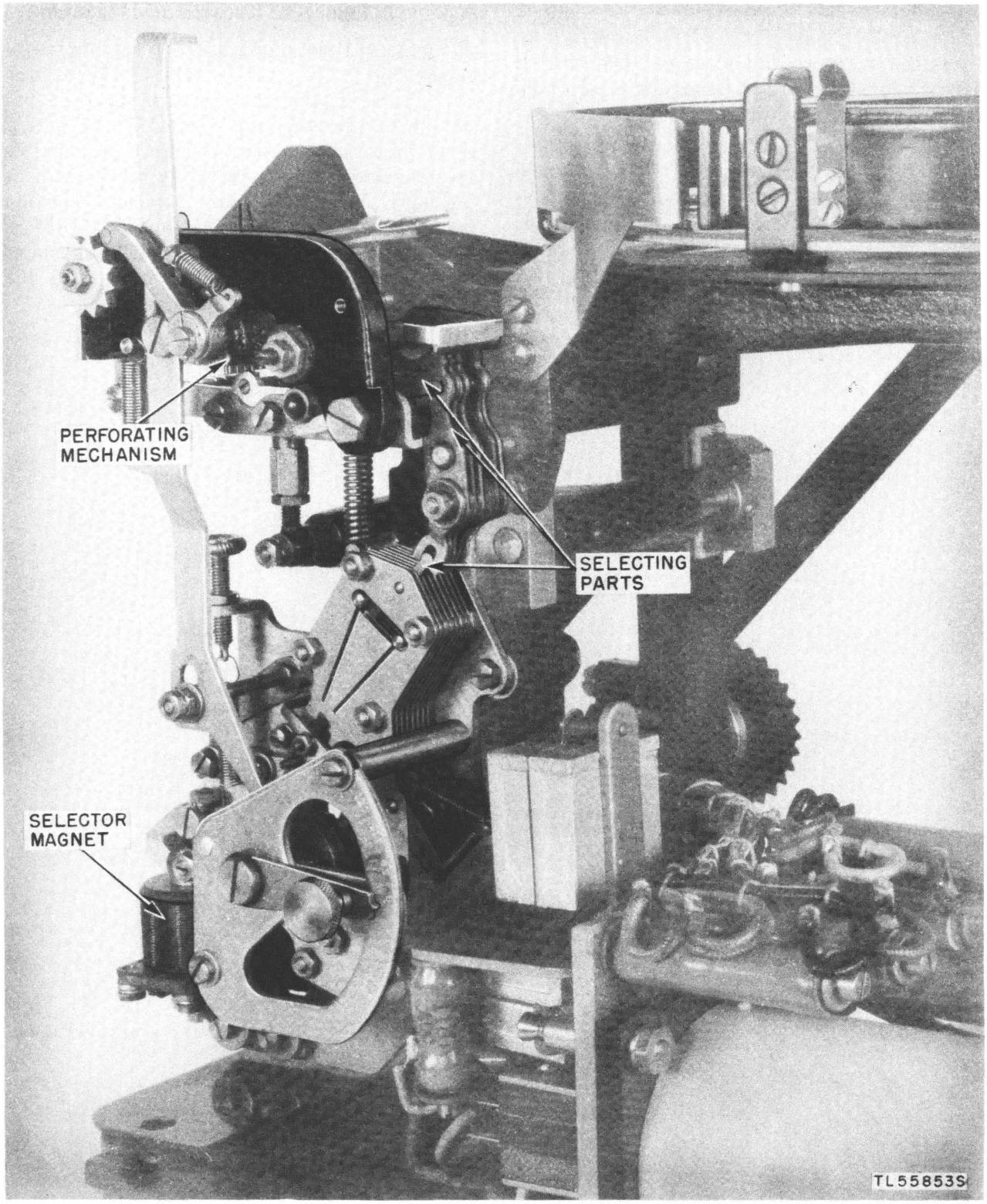

Figure 212. Receiving mechanism.

Section III. ASSEMBLY AND DISASSEMBLY

365. Unpacking

Refer to section III, book 1, for information on unpacking oversea and domestic packages.

366. Physical Checks and Adjustments

a. At the time the equipment is being unpacked and assembled, before the nontyping reperforator is connected to other equipment, always check the items listed below:

(1) General physical condition of entire reperforator to determine that no damage occurred during shipment. (When damaged apparatus is received, if possible complete the repairs in accordance with instructions in part five, book 2, otherwise return the equipment for replacement as directed by the local commander.)

(2) Entire reperforator to determine that no excelsior or other packing material has entered the moving parts. (Refer to pars. 381 and 428 for instructions on cleaning, when necessary.)

(3) All mechanical parts for lubrication. (Refer to section VII, book 2, for lubrication instructions.)

(4) Motor, fuse, switches, cords, and plugs to make sure that all connections and moving parts are in satisfactory condition. (Refer to parts three and five, book 2, for additional information.)

b. Normally, tape is not supplied as part of model 14 nontyping reperforators but will be furnished in varying quantities with other parts of teletypewriter sets and systems. (Refer to par. 375 for instructions on installing tape.)

367. Assembly

In assembling the nontyping reperforator follow the step-by-step instructions included in subparagraphs below.

a. Mount the motor unit on the reperforator base using the three screws furnished with the motor unit.

b. Place the reperforator on the reperforator table or on the associated equipment table. Two metal knobs on the table fit into the base plate of the reperforator to hold it securely to the table.

c. Install a roll of tape. (See par. 375.)

d. Lower the cover over the reperforator.

Note. In prescribing the above assembly procedure, it is assumed that the typing reperforator was in normal working order when it was packed for shipment. When the exact condition of the equipment is not known, complete the checks, adjustments, and repairs listed in paragraph 373 before completely assembling the reperforator.

368. Disassembly and Repacking

a. To disassemble the nontyping reperforator, proceed as follows:

(1) Remove all external wiring and cord connections.

(2) Remove the cover.

(3) Remove any tape remaining in the tape slide by lifting the tape-tension lever and pulling the tape to the rear of the reperforator.

(4) Remove the motor unit by removing the three mounting screws.

(5) Lift the reperforator from the reperforator table or the associated equipment table.

b. Repack the nontyping reperforator in the original individual boxes, if possible. If the original boxes are not available, use a suitable cardboard box or wrap with heavy wrapping paper. Before boxing or wrapping the motor unit, bolt it to a wood pallet which extends about 1 inch on all sides. Place the boxed or wrapped equipment in a strong wooden box and cushion with excelsior or like material to prevent the equipment shifting during transportation. The excelsior should be at least 3 inches thick between the sides of the box and all parts of the equipment. Nail the cover on the box securely and strap it with metal tape or strong wire.

c. Refer to paragraph 23 for instructions on marking repacked equipment.

PART TWO

OPERATING INSTRUCTIONS

Note. For information on destroying this equipment to prevent enemy use, see the destruction notice at the front of this manual.

Section IV. CONNECTIONS, PREOPERATIONAL ADJUSTMENTS, AND TESTS

369. Connections

a. WIRING AND CORD CONNECTIONS FOR MODEL 14 NONTYPING REPERFORATORS. In general, wiring and cord connections for model 14 nontyping reperforators consist of plugging the various plugs into suitable receptacles on equipment tables; all the intricate wiring connections are made at the factory. Usually each receptacle is marked to show which cord should be plugged into it. Where no markings appear on the equipment tables, refer to the wiring diagram for the particular equipment involved.

b. CONNECTING CORDS. The nontyping reperforator is equipped with three connecting cords: Two power cords and one signal cord. Since the nontyping reperforator is a receiving-only machine, a signal cord equipped with a red shell plug is furnished for making connections to the receive circuit of the associated equipment.

370. Power Supply

a. Ordinarily power for the nontyping reperforator motor and signal circuit is furnished through the associated equipment with which the model 14 nontyping reperforator is designed to operate. For information on the various types of power supplies that may be used, see the installation procedures in the technical manuals for associated equipment.

b. The motors furnished with nontyping reperforators are designed to operate either on ac or dc at specific voltages (and frequencies in the case of ac). However, when the available power supply and the motor nameplate data differ, the motor may be connected to the power supply through a multiple-voltage, multiple-frequency rectifier or other voltage-adjusting equipment usually furnished with the associated equipment.

c. Table V is a summary of the types of motors supplied with nontyping reperforators and the power sources on which the associated equipment operates. If the particular motor furnished with a nontyping reperforator is not listed in table V, refer to table IV in book 1, section IV, for information on the various power sources which may be used.

371. Grounding

Grounding of model 14 nontyping reperforators is not required because each nontyping reperforator is connected to ground (for protection of personnel against shock) through its associated equipment. Grounding of equipment during repair is discussed in paragraph 131.

372. Signal Circuit

The signal circuit, like the ground connection discussed in paragraph 371, is obtained from the associated equipment. The signal line does not connect to the nontyping reperforator directly except for emergency operation. For information on the various types of signal circuits that may be used, see the installation procedures in the technical manuals for associated equipment. Signal circuit connections during repair are discussed in paragraph 425.

373. Preoperational Checks and Adjustments

a. GENERAL. (1) All nontyping reperforators are adjusted properly at the factory before being packed for shipment. However, before

putting either new or used equipment in operation, inspect the equipment and, if necessary, lubricate.

(2) Whenever definite information is not available on the condition of the equipment, make checks to be sure that none of the adjustments have shifted. Check the following items, and any other items observed to be in questionable condition.

b. MOTOR. Turn the motor by hand in the direction of normal rotation (counterclockwise when viewed at governor (or fan) end). Be sure there is no bind or excessive backlash between the motor pinion and the main-shaft gear, or that there are no binds in other parts of the equipment. Readjust if necessary. (Refer to par. 227.) See paragraph 29 for motor speed test and adjustment.

Caution: Do not turn the motor backward (governor in clockwise direction). Reversing the direction in which parts are designed to move may cause jamming, breakage, or other damage to parts.

c. TAPE-FEED PAWL. Turn the motor and check to see that the tape-feed pawl engages and turns the tape-feed roll. Readjust if necessary. (See par. 479.)

d. TAPE REEL. See that the tape reel is free on its axis and that the tape feeds properly.

e. TAPE-FEED MECHANISM. Insert a piece of perforated tape in the reperforator. Turn the motor by hand in the direction of rotation (counterclockwise) and observe whether the tape advances one full row of perforations for each complete turn of the main shaft. If the tape moves either more or less than one full row of perforations, readjust to meet the requirements given in paragraph 481.

374. Checking and Adjusting Motor Speed

For information on checking and adjusting the motor speed refer to paragraph 29.

375. Installing Tape in Nontyping Reperforator

Follow the procedure outlined in the subparagraphs below when installing a new roll of tape on the nontyping reperforator.

a. Raise the top of the reperforator cover.

b. Lift the tape retainer from its detent spring. (See fig. 213.) The tape retainer is hinged and will fold over to the opposite side from the detent spring.

c. Place the roll of tape on the spindle so that it unwinds in a clockwise direction. A label on the bottom of the tape reel shows the proper direction for unwinding.

d. Feed tape through the slot in the tape reel.

e. Fold the tape retainer over and fasten it in place with its detent spring.

f. Draw the tape through the tape guide and over the punch block.

g. Lift the tape-tension lever and pass the tape between the tape-tension lever and the feed roll. Be sure enough pressure is exerted on the tape by the tape tension lever to insure proper feeding.

h. Feed the tape through guide hole in the cover.

i. Lower the top of the reperforator cover.

376. Setting Range Finder

The procedure for setting the range finder of the receiving mechanism is discussed under this same topic in paragraph 32.

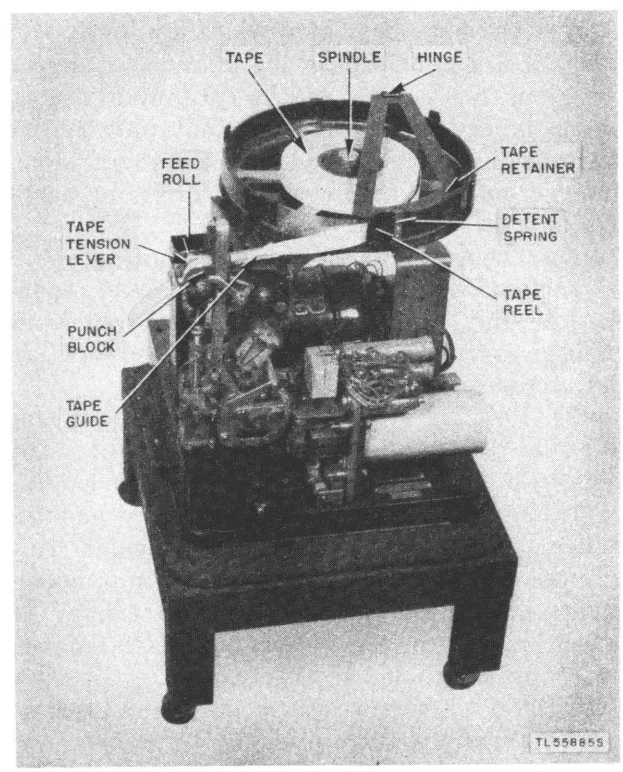

Figure 213. Installing tape in nontyping reperforator.

PART THREE

MAINTENANCE INSTRUCTIONS

Note. The preventive maintenance instructions in this part will serve as a guide for any of the installations or groups of equipment for which this equipment is designed. *Do not attempt unauthorized maintenance on this equipment.*

Section V. PREVENTIVE MAINTENANCE TECHNIQUES

377. Meaning of Preventive Maintenance

Refer to book 1, section V, for the meaning of preventive maintenance and description of preventive maintenance techniques.

378. Introduction to Preventive Maintenance Procedure

a. The preventive maintenance procedure in this section is divided in two classes; work which can be completed while the teletypewriter set remains in service, and work which requires that the teletypewriter set be taken out of service.

(1) The first class of work is limited to the operations performed on the teletypewriter set exterior, that portion of the cords and wiring which is accessible while the nontyping reperforator is in service, and the equipment table. Instructions for this work are given in paragraph 379.

(2) The second class of work includes the operations which require that the cover, reperforator unit, and motor unit be removed from their mounting surfaces before the preventive maintenance work is started.

(3) Detailed information on the different individual test requirements and adjustments of complicated parts and mechanisms are not included in this section. The preventive maintenance check list in paragraph 384 includes references to the related instructions in requirements and adjustments, book 2, section XIV, which apply to the preventive maintenance procedures included in this section.

b. Refer to section VII, book 2, for lubrication instructions and section VIII for moisture-proofing and fungiproofing instructions.

c. Preventive maintenance procedures for the following classes of parts are discussed in book 1, section V; the paragraph numbers refer to book 1.

	Paragraph
Associated equipment tables	36
Cords, cables, and wiring	39
Keys and switches	41
Terminal blocks and slip connections	40

d. Detailed preventive maintenance instructions are arranged by paragraphs as listed below; some of the paragraphs refer to book 1. These are indicated by an asterisk.

	Paragraph
Motor unit	46*
Nontyping reperforator exterior	379
Polar relays	47*
Preparation for preventive maintenance inspection (nontyping reperforator out of service)	380
Reperforator unit	381

e. When worn, bent, or defective parts are found, repair or replace them as instructed in section XIII, book 2.

f. After all preventive maintenance work including lubrication has been completed and the nontyping reperforator has been assembled, make the following test and adjustments:

(1) Motor speed.
(2) Range finder setting.
(3) Local operating tests.

Note. Always check related adjustments when any adjustment is made.

379. Preventive Maintenance for Nontyping Reperforator Exterior (Reperforator in Service)

a. GENERAL. The instructions given below apply to the exterior surfaces of the nontyping

reperforator which are accessible without removing the cover.

b. COVER. (1) *Inspect (I).* Inspect the cover for broken or damaged hinges, loose screws, etc. Check finish for flaking, peeling, rust spots, and severe scratches which expose the metal.

(2) *Tighten (T).* Tighten all loose screws.

(3) *Clean (C).* (*a*) Remove dust and dirt from the outside surface of the cover by wiping it with a piece of clean cheesecloth moistened slightly in water. Moisten the cloth with a little dry-cleaning solvent (SD) to remove oil, grease, or gummy deposits.

(*b*) Remove dust from the inside surface of the cover by using a brush. Clean cheesecloth may be used but the lint has a tendency to cling to the inside padding and may cause damage to the moving parts of the nontyping reperforator. If this operation necessitates the removal of the cover, perform the necessary work when the nontyping reperforator is taken out of service for a routine inspection as outlined in paragraph 380.

380. Preparation for Preventive Maintenance Inspection (Nontyping Reperforator Out of Service)

a. For a thorough preventive maintenance inspection the nontyping reperforator must be taken out of service and partially disassembled as outlined in *b* below.

b. Take the following preparatory steps to facilitate inspection of the various units or parts.

(1) When a table, bench, or box is not available, use the equipment table as a workbench. Spread several thicknesses of newspaper, cloth, or other material to protect the table from grease, oil, and other dirt.

(2) Disconnect the power and connecting cords.

(3) Remove the reperforator cover and place it where it will not be damaged.

(4) Fold a length of cheesecloth into a pad about 18 inches square and 6 or 8 layers thick. If necessary, four or five thicknesses of any clean, lint-free cloth can be used.

(5) Place the cloth pad on the table.

(6) Remove the motor from the reperforator unit.

(7) Remove any tape remaining on the tape reel or in the tape guide.

Caution: Use care in handling the motor unit and the nontyping reperforator unit. Units that have been dropped require a major overhaul and thorough testing before being put back into service.

381. Reperforator Unit

a. CLEAN (*C*). To clean the reperforator unit proceed as follows:

(1) Place the nontyping reperforator unit on the workbench. Remove all old grease and oil that has gathered dirt and dust. Use a piece of clean, dry cheesecloth or other lint-free cloth folded over the end of Screwdriver TL–44 to get between the hard-to-reach places.

(2) Use a clean area of the cheesecloth as soon as one area becomes soiled with oil or grease. Loop a piece of cloth over the fingers and wipe all readily accessible surfaces.

Caution: Do not wipe dirty grease or other foreign matter into bearings. Remove as much of the dirty grease as possible with the tip of the screwdriver or an orange stick. Wipe each bearing with a piece of clean cheesecloth.

(3) Loosen both range-finder retaining screws. Remove the lower screw completely and slip the range finder off the remaining screw (with the slotted screw hole). Use a clean piece of cheesecloth folded over the end of a screwdriver to remove oily deposits of dirt, dust, paper lint, etc., from the outer surfaces of the selector mechanism and range finder.

(4) Flush the selector mechanism by pouring a small amount (about 1 tablespoonful) of dry-cleaning solvent (SD) between the separator plates. Repeat the flushing process if necessary.

b. INSPECT (*I*). Check for the following parts for deficiencies as indicated:

(1) Frame casting for cracks or other damage.

(2) Loose, broken, or missing mounting screws.

(3) All levers, rollers, bearings, shafts, and gears to determine that all parts move freely and are not bent, broken, or excessively worn.

(4) Missing, broken, or distorted springs.

(5) Main shaft and associated gears, bear-

ings, cams, clutches, and springs for binding, excessive wear, or other damage.

(6) Punch mechanism to determine that there are no broken, missing, or otherwise damaged parts.

c. TIGHTEN (*T*). Tighten loose screws, bolts, or nuts if they are not part of some adjustment.

d. ADJUST (*A*). Make all necessary adjustments in accordance with detailed requirements in section XIV, book 2.

e. LUBRICATE (*L*). Refer to section VII, book 2, for instructions on lubrication.

382. Preventive Maintenance Tools and Materials

The tools and materials necessary to perform preventive maintenance are listed in section V, book 1.

383. Preventive Maintenance Schedules and Records

Refer to paragraph 49 for instructions on preparing preventive maintenance schedules and records.

Section VI. PREVENTIVE MAINTENANCE CHECK LIST

384. Preventive Maintenance Check List for Model 14 Nontyping Reperforators

The following check list is a summary of the preventive maintenance to be performed on all model 14 nontyping reperforators. The time intervals shown on the check list may be reduced at any time by the local commander. However, for best performance of equipment, the operations must be performed at least as frequently as called for in the check list. The echelon column indicates which operations are first-echelon maintenance and which operations are second-echelon maintenance. Operations are indicated by the letters of the word FITCAL. For example, if the letters ITA appear in the Operations column, the item to be treated must be inspected (I), tightened (T), and adjusted (A).

Preventive Maintenance Check List for Nontyping Reperforators

Item No.	Operations	Item (routine)	Par. No.	When performed	Echelon
1	ICT	Nontyping reperforator (exterior)	379	Daily	1st
2	IA	Motor speed	29	Daily	1st
3	C	Equipment table or shelf	36	Daily	1st
4	IA	Range finder setting	32	X	2d
		Nontyping reperforator unit			
5	C	All mechanical parts	381	X	2d
6	IT	General over-all mechanical condition	381	X	2d
7	ICT	Selector mechanism	381	X	2d
8	I	Main shaft	381	X	2d
9	I	Main shaft bearings	381	X	2d
10	I	Punch-arm roller	381	X	2d
11	IA	Adjusting sleeve	381	X	2d
12	ITC	Wiring and slip connections	39, 40	X	2d
13	ITC	Switch (motor)	41	X	2d

Preventive Maintenance Check List for Nontyping Reperforators (contd.)

Item No.	Operations	Item (routine)	Par. No.	When performed	Echelon
14	ITC	Cords and plugs	39	X	2d
15	ITCA	Line relay	47	X	2d
16	L	Entire reperforator mechanism	388	X	2d
		Motor unit			
17	C	Exterior of motor unit	46	X	2d
18	FIT	General mechanical condition	46	X	2d
19	IT	Motor pinion gear	46	X	2d
20	ICA	Motor brushes and commutator	46	X	2d
21	ICA	Governor	46	X	2d
22	ITC	Switch and wiring	39, 41	X	2d
23	L	Motor unit	46	X	2d
		Punch mechanism			
24	ICL	Entire mechanism	381, 388	X	2d

Note: X in When performed column is determined by average hours of use:

	Normal temperatures	Tropical temperatures
Up to 8 hours per day	every 30 days	every 15 days
8 to 12 hours per day	every 15 days	every 10 days
12 to 24 hours per day	every 10 days	every 7 days

F	I	T	C	A	L
Feel	Inspect	Tighten	Clean	Adjust	Lubricate

Section VII. LUBRICATION

Note. A War Department Lubrication Order is not issued on nontyping reperforators.

385. Recommended Lubricants

Refer to book 1, section VII, for a list of the lubricating materials necessary in servicing the nontyping reperforators.

386. Detailed Lubrication Instructions

a. GENERAL. The location of the parts of the nontyping reperforator to be lubricated are shown in figures 214 through 216. The type of lubricant to be used and the specific instructions for lubricating each part are given in paragraph 388. The lubrication instructions listed are based on normal operating conditions, with the equipment in service for an average of 8 hours a day. Under these conditions the lubrication interval is once every 30 days. Refer to the preventive maintenance check list. (See par. 384.) When equipment is operated more than 8 hours a day, reduce the intervals. When equipment is operated in tropical climates, a further reduction in the interval is required. Do not lubricate the equipment with the motor running.

Caution: Do not apply lubricants in excess of the quantities recommended. Wipe off excess oil.

b. METHODS OF APPLYING GREASE. Use of

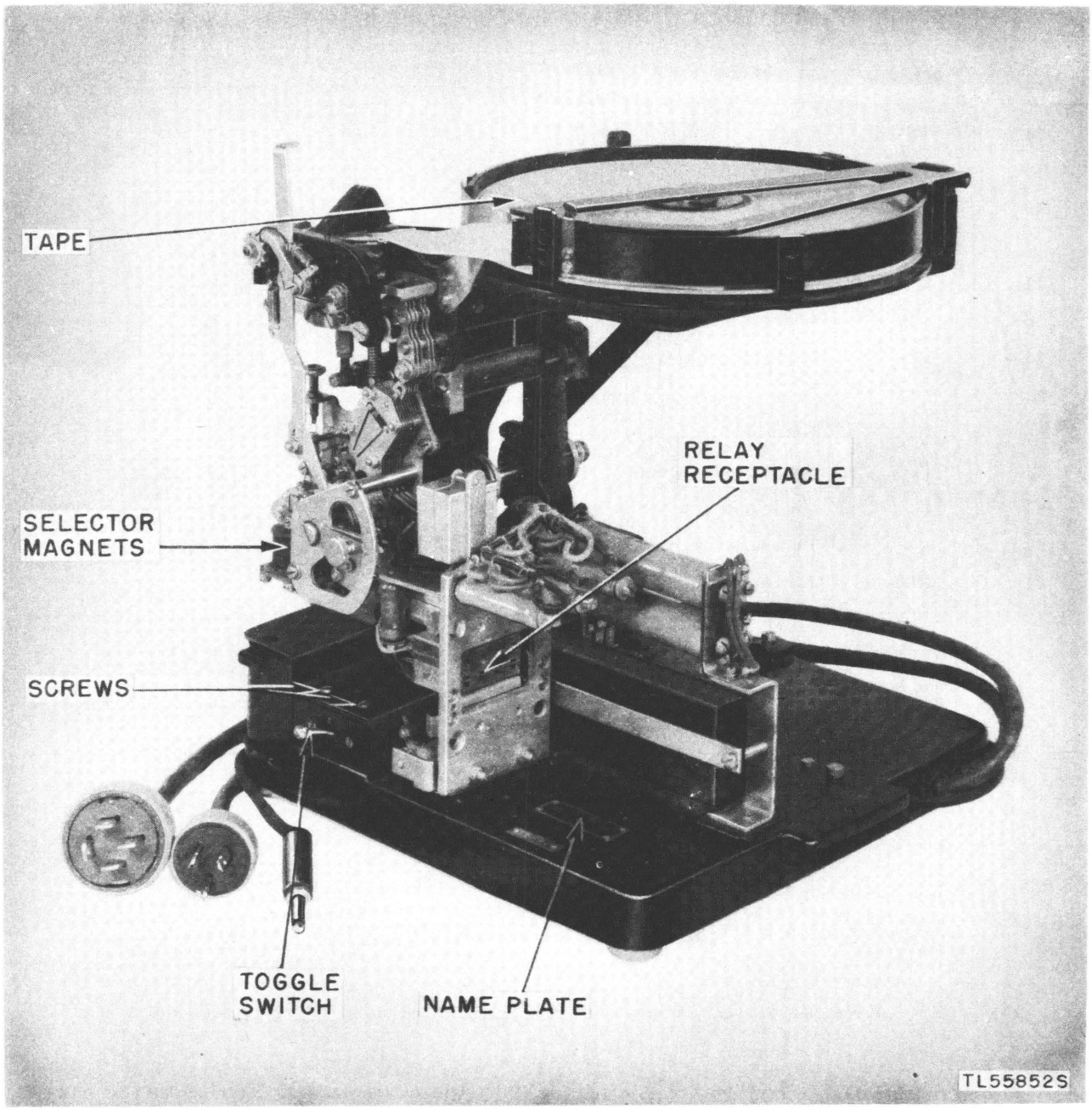

Figure 214. Lubrication points for selector mechanism.

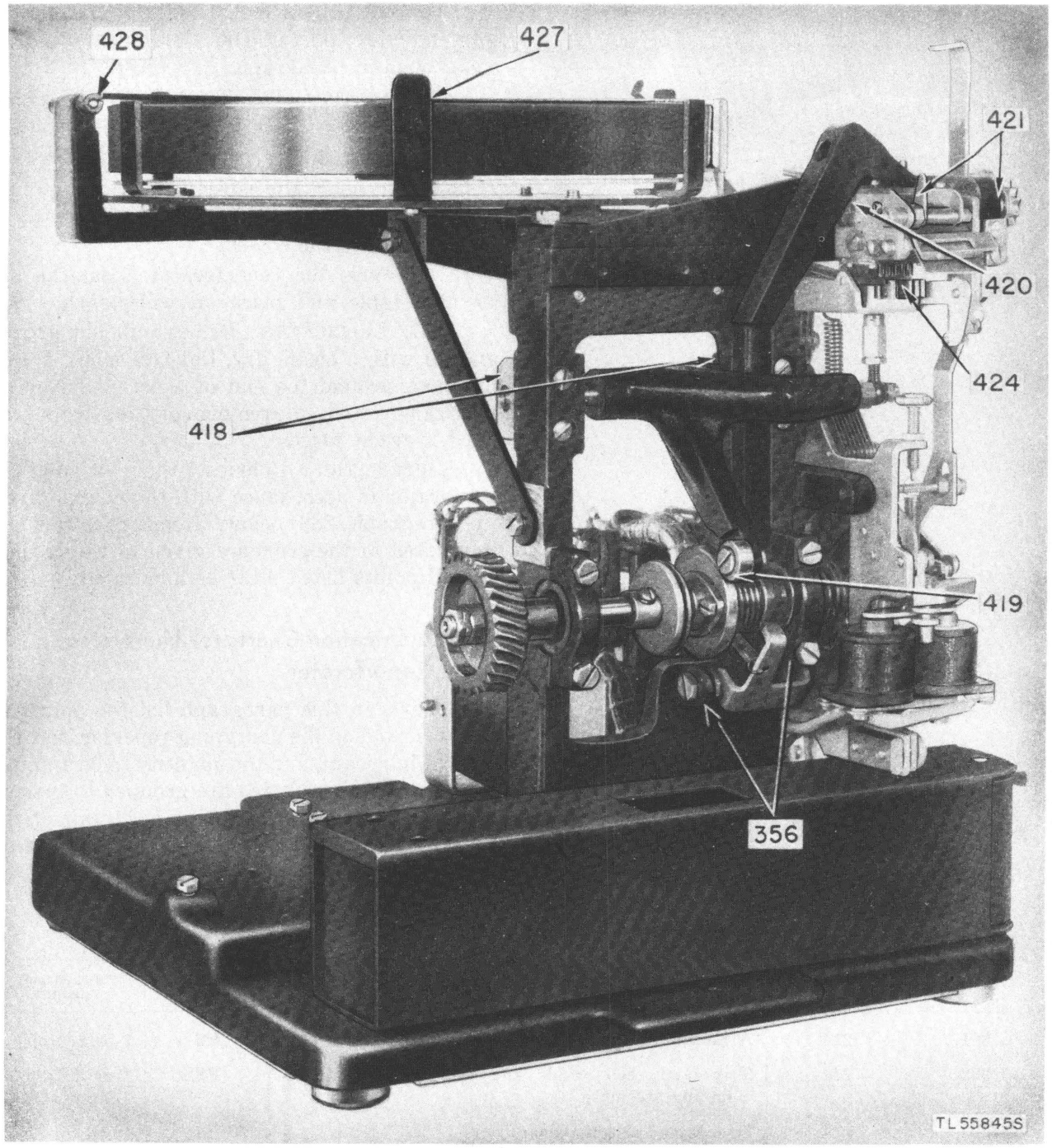

Figure 215. Lubrication points for main shaft.

the grease gun furnished as part of Tool Equipment TE–50 is described in paragraph 52.

c. METHODS OF APPLYING OIL. Refer to paragraph 52*c* for the proper methods of applying oil.

387. Preparation for Lubrication

a. GENERAL. To thoroughly lubricate the nontyping reperforator it must be taken out of service and partially disassembled as outlined in *c* below.

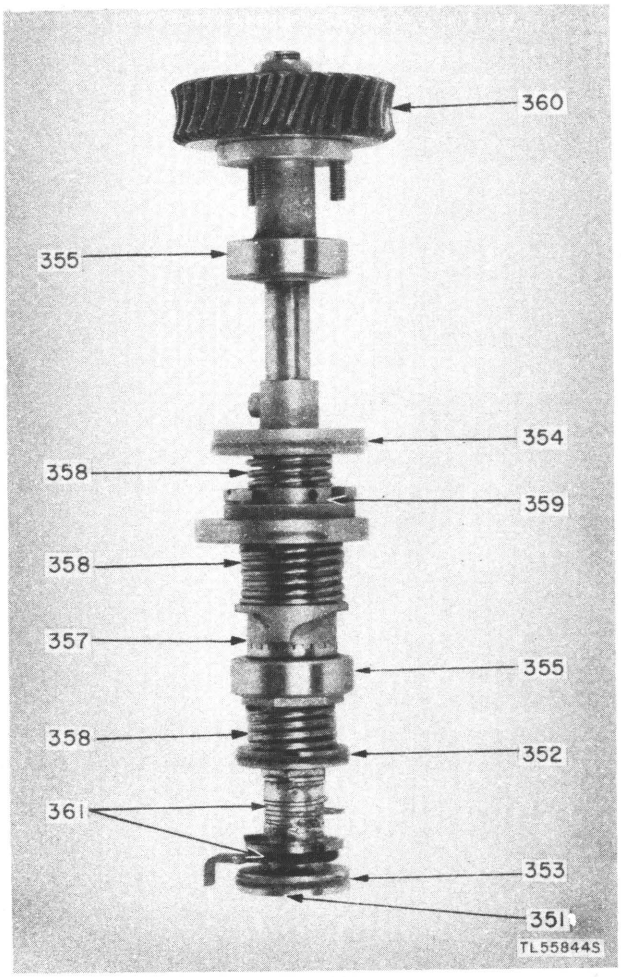

Figure 216. Lubrication points on reperforator unit.

b. GREASE GUN AND OILER. Fill the grease gun and oiler (part of Tool Equipment TE–50) as outlined in paragraphs 52*b* and *c*.

c. PREPARATION. Take the following preparatory steps to facilitate lubrication of the various parts and units.

(1) Disconnect the power and signal circuit connections during the lubricating process.

(2) Remove the cover.

(3) Remove the reperforator from the associated table and place on workbench.

d. OLD LUBRICANTS. Remove all old grease and oil with a clean, dry, lint-free cloth. Wrap the cloth around the end of a screw-driver or an orange stick to remove old lubricants in hard-to-reach places.

e. LUBRICATION. Lubricate the nontyping reperforator in accordance with the charts given in paragraph 388 below. Items need not be lubricated in the sequence given in the charts, but all points listed *must* be lubricated.

388. Lubrication Charts for Nontyping Reperforator

The charts in this paragraph list the points to be lubricated on the nontyping reperforator, the type of lubricant, and the quantity to be applied. The item numbers listed are grouped to include all the points of lubrication on each unit of the reperforator. The same numbers are shown on the accompanying illustrations.

a. SELECTOR ASSEMBLY.

Item	Fig. No.	Name of part	Lubricant	Method and quantity
301	214	Armature bearings (2)	PS	1 or 2 drops.
302	214	Trip latch, bell crank, and stop lever of range-finding assembly	PS	1 or 2 drops.
303	214	Swords and selector levers	PS	Drop oil between separating plates.
304	214	Selector T-levers	PS	All points of contact.
305	214	Armature locking lever	PS	1 or 2 drops.
306	214	Locking wedge at point of engagement with locking lever	PS	1 or 2 drops.
307	214	Armature locking lever and selector lever	PS	1 or 2 drops at pivot point.

b. MAIN-SHAFT ASSEMBLY.

Item	Fig. No.	Name of part	Lubricant	Method and quantity
351	215	Main shaft	PS	Tilt machine backwards until front end is about 6 inches up, remove outer friction plate. Fill the shaft full.
352	215	Locking-lever cam felt washers	PS	Saturate with oil.
353	215	Selector-cam friction washers	PS	Saturate with oil.
354	215	Main cam friction disk	PS	Saturate with oil.
355	215	Ball bearings (2)	PS	Oil top and bottom.
356	215	Clutch throw-out lever bearings (2)	PS	1 or 2 drops.
357	215	Clutch	PS	Oil freely.
358	215	Compression springs (3)	PS	Allow oil to flow into prongs under springs.
359	215	Cam bushing through oil hole	PS	1 or 2 drops.
360	215	Fiber gear	GL	Apply grease sparingly.
361	215	Selector cam	PS	Each cam peak.

c. PERFORATOR ASSEMBLY.

Item	Fig. No.	Name of part	Lubricant	Method and quantity
415	214	Punch-arm shaft adjusting screw	PS	1 or 2 drops.
416	214	Detent roller and eccentric	PS	1 or 2 drops.
417	214	Punch-hammer bearings (2)	PS	1 or 2 drops.
418	216	Punch-arm shaft bearing blocks	PS	Refill two oil holes.
419	216	Punch-arm cam roller	GL	Apply grease sparingly.
420	216	Punch-block oil hole	PS	1 or 2 drops.
421	216	Feed-roll bearings (2) top and bottom	PS	1 or 2 drops.
422	214	Lock-bail bearings (2)	PS	1 or 2 drops.
423	214	Transfer levers all points of contact	PS	1 or 2 drops.
424	216	Punch levers all points of contact	PS	1 or 2 drops.
425	214	Lock-bail roller	PS	1 or 2 drops.
426	214	Feed pawl	PS	1 or 2 drops.
427	216	Tape-reel oil hole	PS	Fill the hole.

807975 O - 48 - 15

c. PERFORATOR ASSEMBLY (Continued)

Item	Fig. No.	Name of part	Lubricant	Method and quantity
428	216	Tape-retainer hinge	PS	1 or 2 drops.
429	214	Space-out lever guide screws (2)	PS	1 or 2 drops.
430	214	Punch-hammer spring anchors	GL	Apply grease sparingly.
431	214	Detent-lever spring anchors	GL	Apply grease sparingly.

Section VIII. MOISTUREPROOFING AND FUNGIPROOFING

389. General

For general information on moistureproofing and fungiproofing refer to paragraph 55.

390. Reducing Failures

Refer to paragraph 56 for a description of the recommended moistureproofing and fungiproofing treatment.

391. Treating Nontyping Reperforator

a. PREPARATION. Make all necessary repairs for proper operation of the equipment.

b. DISASSEMBLY.

Note. As equipment is disassembled, all screws and bolts that are removed should be placed in their respective holes, thus preventing loss of screws or clogging of threads during treatment.

(1) Remove the polar relay from its receptacle. (See fig. 217.)

(2) Remove screws, and lift cover from the toggle switch. (See fig. 217.)

(3) Remove recorder tape. (See fig. 217.)

(4) Remove cover plate from under side of base.

c. CLEANING. Clean all dirt, dust, rust, and fungus from the equipment; clean all oil and grease from the surfaces to be varnished.

Note. Unless cleaning is done very carefully and thoroughly, the effectiveness of the moistureproofing and fungiproofing will be impaired.

d. MASKING. No masking is necessary as equipment is to be brush-treated.

e. DRYING. Place equipment in oven or under heat lamps and bake for 4 to 6 hours at a temperature of 140° F.

Caution: Do not exceed 160° F. If insulating compound in any of the component parts should begin to soften, decrease the temperature and increase the drying time 1 hour for each 10° F. decrease in temperature.

f. VARNISHING. (1) With a small brush, apply two coats of moistureproofing and fungiproofing varnish (Lacquer, Fungus-resistant, specification No. 71–2202 (stock No. 6G1005.3 or equal)) to the magnet coils (fig. 217), and to all wiring and cables except where rubber-covered. Allow each coat to air-dry for 15 or 20 minutes before applying next coat.

Caution: Care must be taken that varnish does not come in contact with any electrical contacts or moving parts.

(2) Apply varnish immediately after the equipment is dried. If varnish is not applied immediately, moisture condenses on the equipment. Varnish applied over a moist surface peels off readily after it has dried.

g. REASSEMBLY. Reassemble the equipment, following instructions for disassembly in reverse order. Test the equipment thoroughly for proper operation.

h. MARKING. Mark the letters MFP and the date of treatment near the nameplate (fig. 217).

EXAMPLE: MFP—6 Oct 45.

392. Moistureproofing and Fungiproofing After Repairs

If, during repairs, the coating of protective varnish has been punctured or broken, and if complete treatment is not needed to reseal the equipment, apply a brush coat to the affected part. Be sure the break is completely sealed.

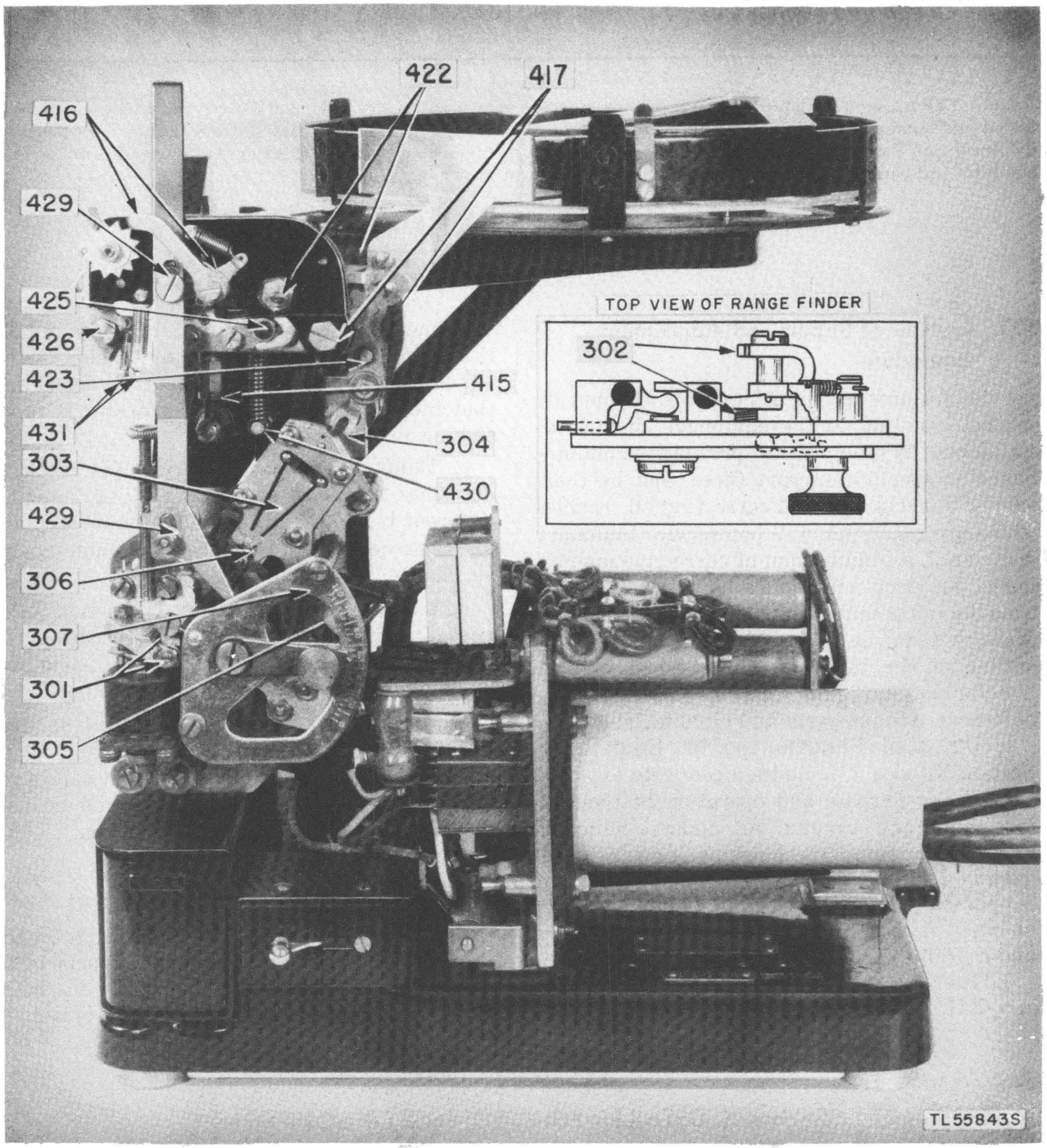

Figure 217. Treatment of nontyping reperforator.

PART FIVE

REPAIR INSTRUCTIONS

Note. Failure or unsatisfactory performance of equipment used by Army Ground Forces and chiefs of the technichal and administrative services will be reported on WD AGO Form 468 (Unsatisfactory Equipment Report); by Army Air Forces, on Army Air Forces Form 54 (Unsatisfactory Report). If Army Air Forces Form 54 is not available, prepare the data according to the sample form shown in figure 45B.

Section IX. GENERAL REPAIR PROCEDURE

393. Outline of Repair and Adjustment Procedure

Service failures can be kept to a minimum by careful handling of the equipment during installation, by completing preventive maintenance as specified in part three, and by thoroughly investigating and correcting all troubles which are encountered. When service faults are discovered, a definite plan of corrective maintenance pocedure will reduce both the length of time the equipment is in trouble and the amount of work required to complete the repairs. An outline of the information furnished in part five for assistance in locating and correcting defects in various parts and circuits follows:

a. DETAILED FUNCTIONING OF EQUIPMENT. Section X, book 2, includes a complete explanation of the purpose and operation of the various parts and circuits. An understanding of how the various mechanisms function will greatly assist in determining when equipment is operating correctly, when it requires repairs, or when it is not practical to attempt repairs and therefore should be replaced.

b. TOOLS AND TEST EQUIPMENT. Sections V and XII, book 1, describe the tools and test equipment normally required to check all of the clearances accurately, spring tension, speed of rotation, and other adjustments to determine that the entire nontyping reperforator is functioning properly.

c. TROUBLE LOCATING. Section XII, book 2, describes methods of isolating and locating different troubles and provides step-by-step analysis procedures in the form of trouble-analysis charts.

d. REPAIR AND REPLACEMENT. Section XIII, book 2, furnishes recommended procedures for the repair and replacement of those parts and units which experience the most wear.

e. REQUIREMENTS AND ADJUSTMENTS. Section XIV, book 2, groups in one section all of the test requirements and adjustment values required to make a complete check and adjustment of entire reperforator mechanism.

394. Unsatisfactory Equipment Report

Refer to paragraph 64 for information on the proper unsatisfactory equipment reports to be used when trouble occurs in equipment more often than repair personnel feel is normal.

Section X. DETAILED FUNCTIONING OF EQUIPMENT

395. Introduction to Detailed Functioning of Equipment

a. For an explanation of the purpose of this section refer to paragraph 65. The information furnished in the individual paragraphs of this section applies particularly to the model 14 (RPE26) nontyping reperforator, assuming that it is in normal operating condition with the necessary power supplies and signal circuits properly connected.

b. Some information in this section parallels that contained in book 1, section XI. Where de-

tails pertaining to the functioning of certain parts or assemblies of the nontyping reperforator are identical with similar parts or assemblies of typing reperforators, specific references will be made to detailed functioning paragraphs in book 1.

396. Detailed Functioning of Equipment References

Refer to the general index in the back of this manual for references to individual parts; the functioning of the parts and subassemblies are listed either by name of by their closest physical relationship to the larger assemblies and units of the reperforators.

397. Basic Principles of Operation

a. START-STOP FIVE-UNIT TELETYPEWRITER CODE. Refer to paragraph 364 and figures 21 and 212 for illustrations and explanations of the various combination of impulses received by the nontyping reperforator.

b. SYNCHRONISM. Refer to paragraph 18 for a discussion of the relationship between the speed of the motors, gears used, and the start-stop features of the teletypewriter code, all of which must be coordinated before the receiving mechanism of the nontyping reperforator and the transmitting mechanism of distant teletypewriter equipment will operate in unison, thus insuring that the impulses will be received and

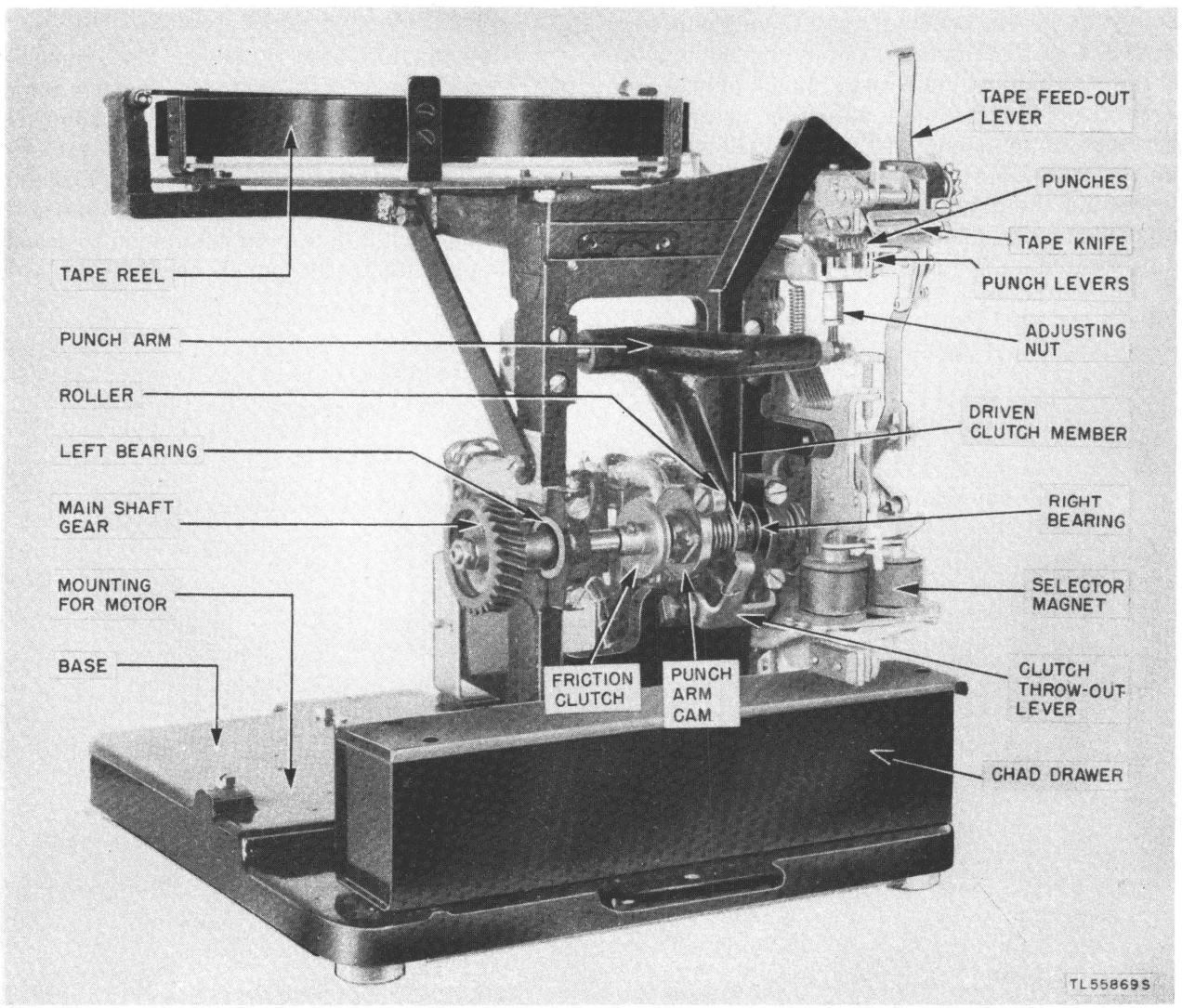

Figure 218. Nontyping reperforator less motor unit.

translated correctly. The detailed descriptions and operation of the selector-cam sleeve given in paragraph 70 include an explanation of the part played by the design of the selector-cam sleeve in synchronizing the receiving mechanism to the incoming code impulses.

398. Motor Unit

Motor units supplied with nontyping reperforators function as described in paragraphs 68 and 69.

399. Main-Shaft Assembly

a. DESCRIPTION AND PURPOSE. The main-shaft assembly mounted horizontally on the frame of the reperforator (fig. 218) on the rear of the reperforator mechanism is an assembly of gears, bearings, cams, and clutches arranged to distribute power from the motor to the mechanically-operated parts of the reperforator. The complete assembly determines the speed of rotation and timing of the various cam actions for any given speed of the motor furnishing the driving power.

b. OPERATION. Meshing of the main-shaft gear, located on the rear end of the shaft, with the motor pinion gear results in continuous rotation of the main shaft when the motor is turning. Power is then distributed from the shaft to the various parts of the nontyping reperforator through clutches, cams, and gears. (See fig. 219.) The selector-cam sleeve fitted over the forward end of the main shaft provides power for the selector unit through the medium of a friction clutch formed by two pairs of steel disks separated by a felt washer. Operation of the main-shaft clutch by means of the sixth cam on the selector-cam sleeve causes the main-shaft driving clutch member to engage the main-shaft driven clutch member thus rotating the punch-arm cam which in turn operates the punch arm. The punch arm operates the punches and spacing mechanism.

400. Selecting Mechanism (Pulling Magnet)

a. DESCRIPTION AND PURPOSE. The purpose of the selecting mechanism is to receive signals from the transmitting station, distributing them mechanically, thereby setting up various combinations with the transfer levers. The combinations set up with the transfer levers will cause the punch levers to be positioned to select certain punches in the punch block. When the

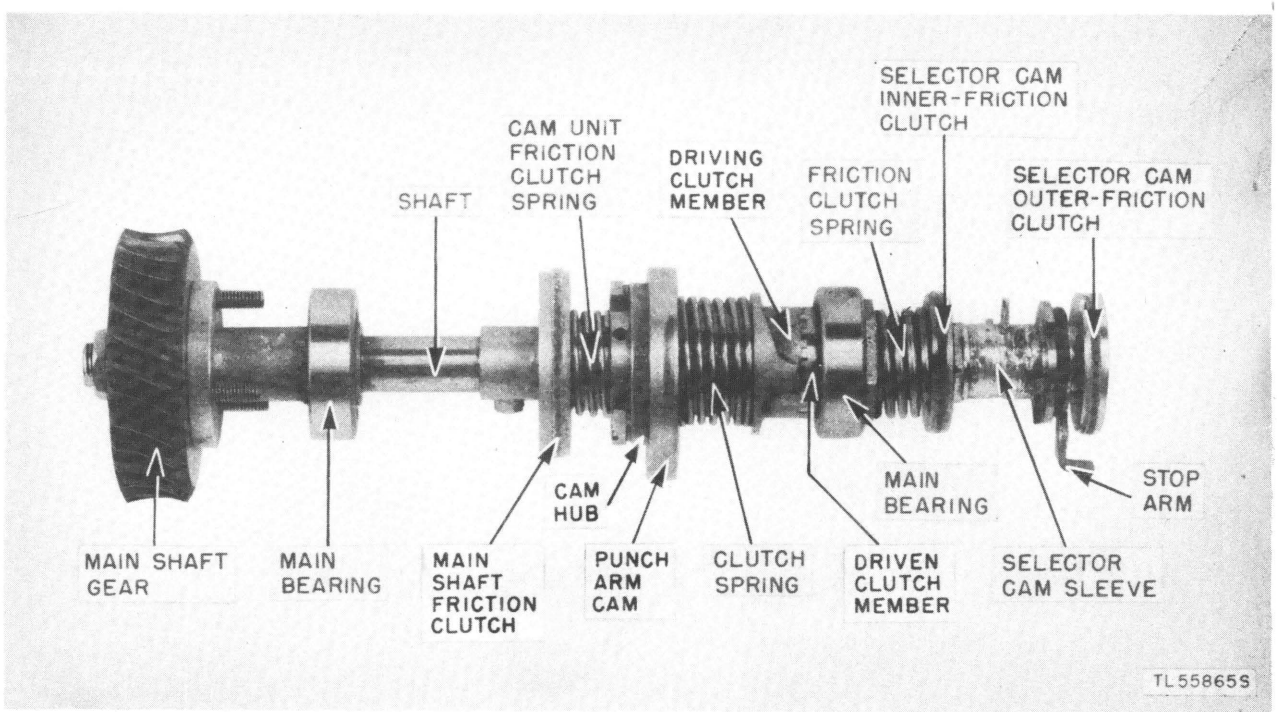

Figure 219. Main shaft of nontyping reperforator.

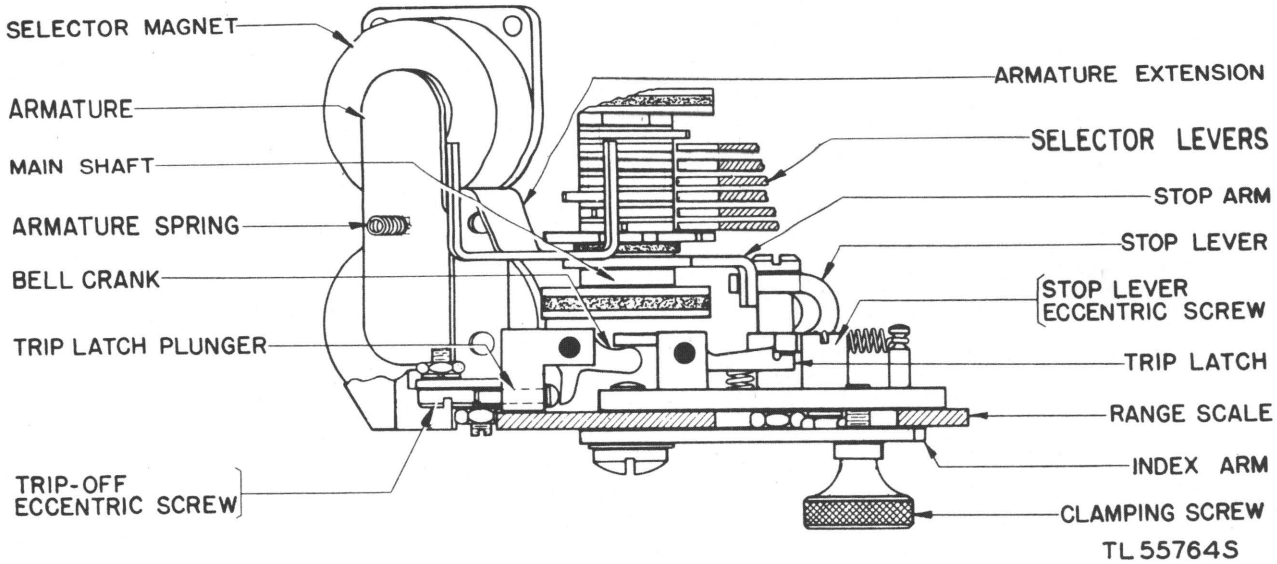

Figure 220. Cross-section of selector mechanism.

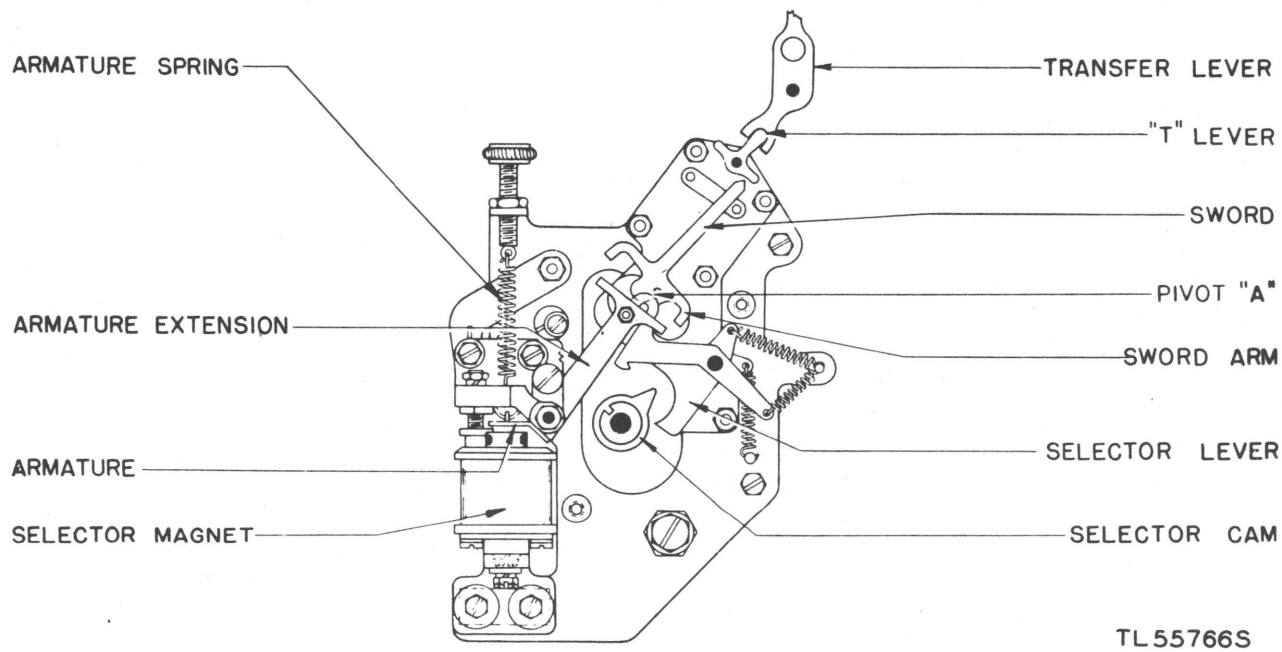

Figure 221. Operation of selector unit.

punch hammer moves upward the selected punch pins will be forced through the tape causing a combination of holes to be perforated. The selecting mechanism is controlled by a selector magnet which receives the code impulses from the line. Normally the armature of this magnet (fig. 220) is pulled up and the stop arm is against the stop lever which in turn is held by the trip latch. The cam sleeve is prevented from revolving because the stop arm, which is a part of the selector cam sleeve, is engaged with the stop lever.

b. OPERATION. When the start impulse, which is spacing (no current) is received, the armature is released and pulled away from the magnet pole pieces by the armature spring. This moves the trip latch (fig. 220) out of engagement with the stop lever, releasing the

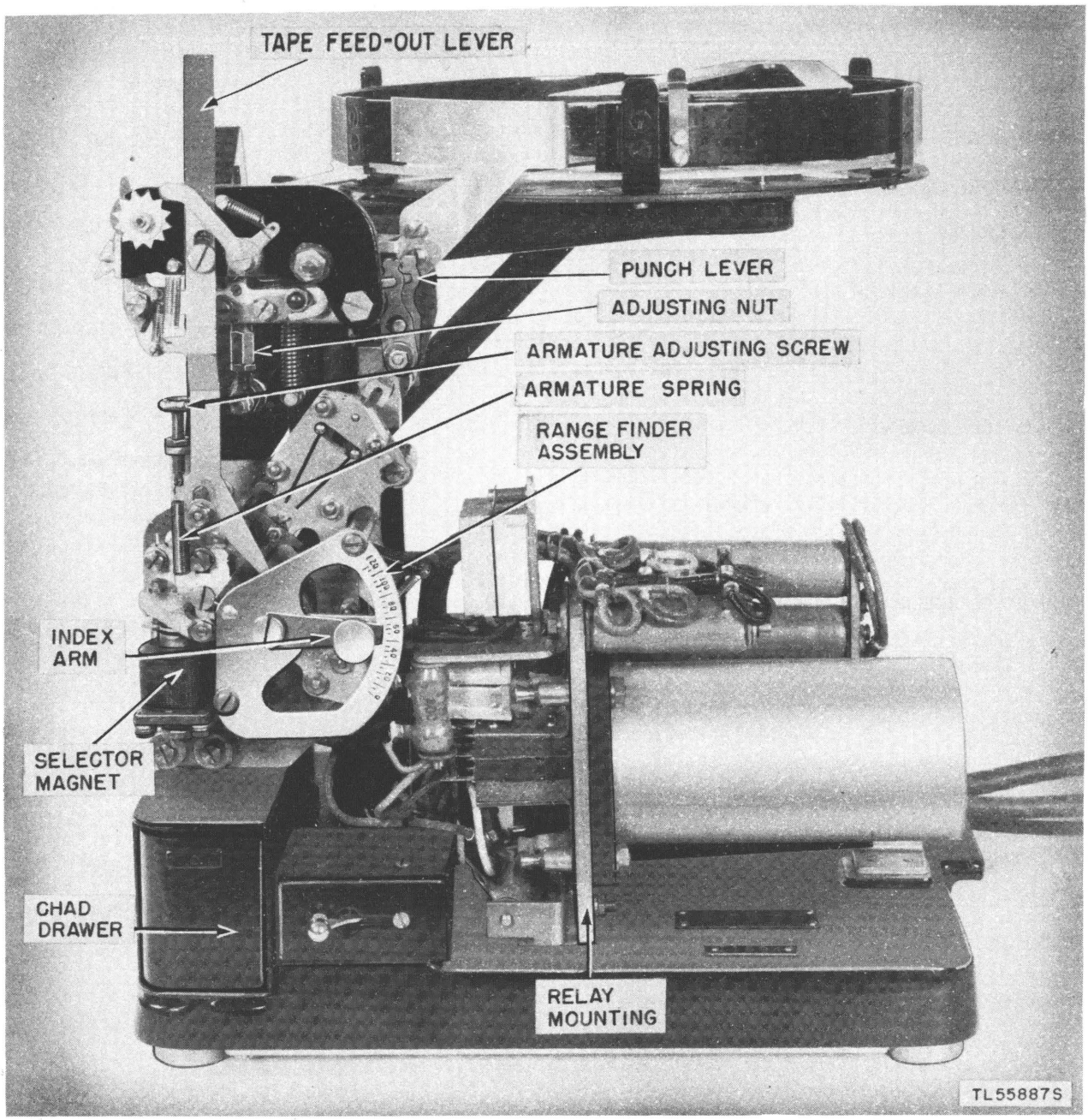

Figure 222. Side view of nontyping reperforator.

stop arm, and allows the cam sleeve to revolve with the main shaft. Each transfer lever is operated by a selector cam through the medium of a selector lever, a sword, and a T-lever.

401. Example of Selector Unit Operation

The selector unit operates as follows: Assume the code for the letter E is received. Upon the reception of the start impulse (no current), the armature moves away from the magnet, imparting motion first to the trip-latch plunger, which in turn causes the bell crank to move the trip latch out of engagement with the stop lever, releasing the stop arm. The selector cams start to revolve and the No. 1 selector cam engages the No. 1 selector lever when the first impulse of the letter E (marking or current im-

pulse) has been received by the magnets from the line. The magnet is energized, operating the armature and causing the upper end of the armature extension to be in the path of the upper sword arm. When the peak of the No. 1 cam passes the No. 1 selector lever, the No. 1 selector lever is rotated counterclockwise, carrying with it the sword, which strikes the upper end of the armature extension and is in turn rotated clockwise about its pivot. This positions the sword so that when the No. 1 cam clears the selector lever, the selector lever spring will cause the sword to be moved against the lower end of the T-lever which in turn causes the No. 1 transfer lever to be rotated clockwise, bringing the No. 1 punch lever in a position to operate the No. 1 punch. As no current is received while the Nos. 2, 3, 4, and 5 cams are passing their selector levers, the magnet armature is released and pulled away from the magnet by a spring. The lower end of the armature extension will then be in the path of the lower sword arms. As the Nos. 2, 3, 4, and 5 cams pass the Nos. 2, 3, 4, and 5 selector levers, the Nos. 2, 3, 4, and 5 transfer levers will be moved counterclockwise. The transfer levers will be held in this position until the perforation in the tape of the letter E combination has been completed. The sixth cam releases the main-shaft clutch allowing the punch-arm cam to start revolving. As the punch-arm roller rides up on the high part of its cam the punch-arm link will force the punch hammer upward, carrying with it the punch levers. The selected

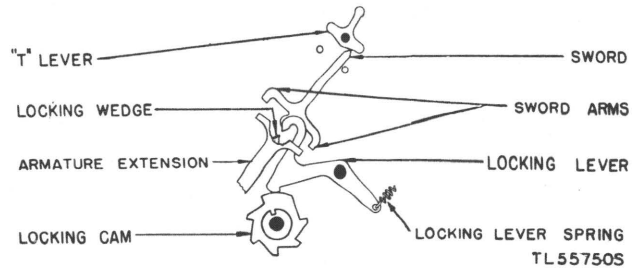

Figure 223. Locking lever.

No. 1 punch lever will force the No. 1 punch pin upward, through the tape, thus perforating a hole in the No. 1 position in the tape.

402. Orientation of Selecting Mechanism (Range Finder)

For proper operation of the nontyping reperforator the orientation or range of the selecting mechanism must be set. Refer to paragraph 83 for description and operation of range finder.

403. Locking Cam and Locking Lever

See paragraph 84 for the detailed functioning of the locking cam and locking lever.

404. Main-Shaft Clutch Throw-Out Lever

The functioning of the main-shaft clutch throw-out lever is discussed in paragraph 85. In the nontyping reperforator the revolving of the punch-arm cam affects only the perforation of a combination of holes in the tape.

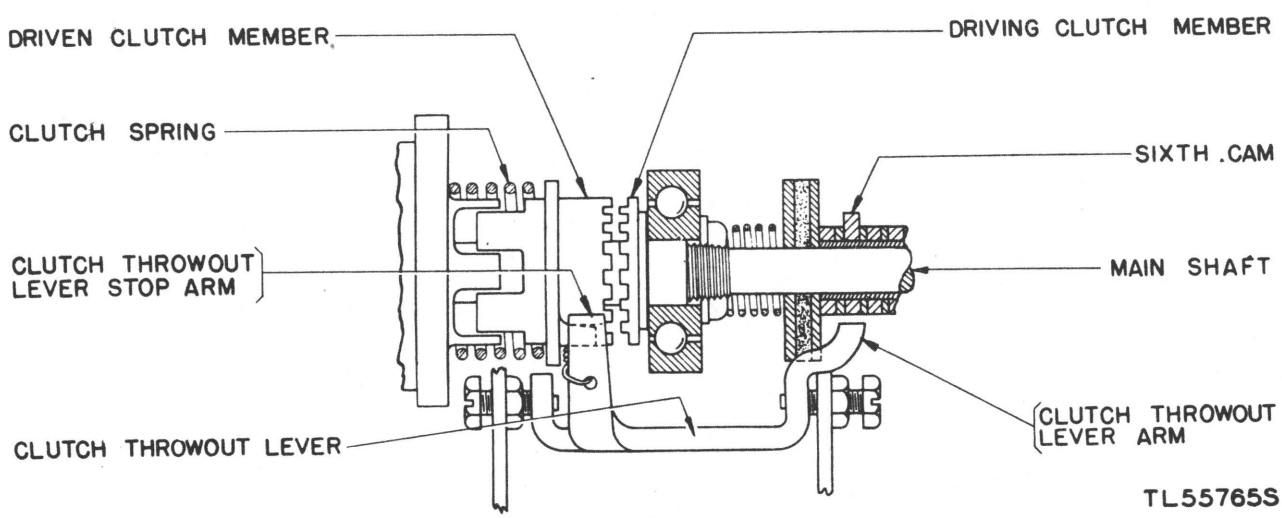

Figure 224. Main-shaft clutch throw-out lever.

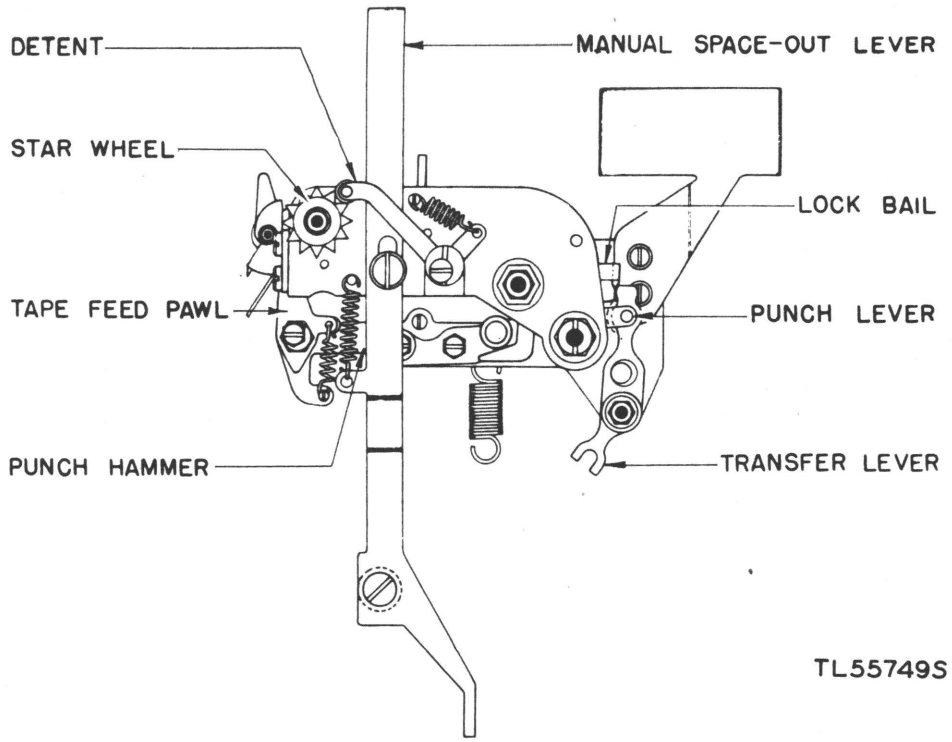

Figure 225. Perforating mechanism.

405. Perforator Mechanism

a. DESCRIPTION AND PURPOSE. Above the selecting mechanism is the perforator mechanism which consists essentially of a punch block with a set of punches for perforating the tape, a punch hammer, a set of punch levers, and a tape-feed mechanism. The punch levers rest horizontally in guide slots in the punch hammer, just below and in line with the punches. The rear end of each punch lever is attached to a transfer lever which in turn is connected to a T-lever of the selecting mechanism. At the rear of the punch hammer and extending over the tops of the transfer levers is a lock bail.

b. OPERATION. When the punch hammer

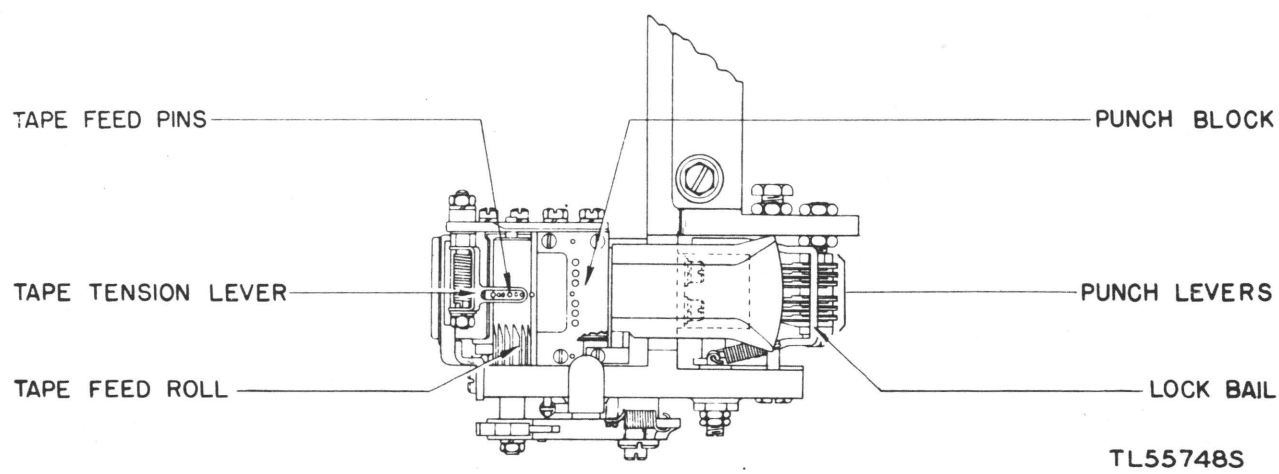

Figure 226. Tape-feeding mechanism.

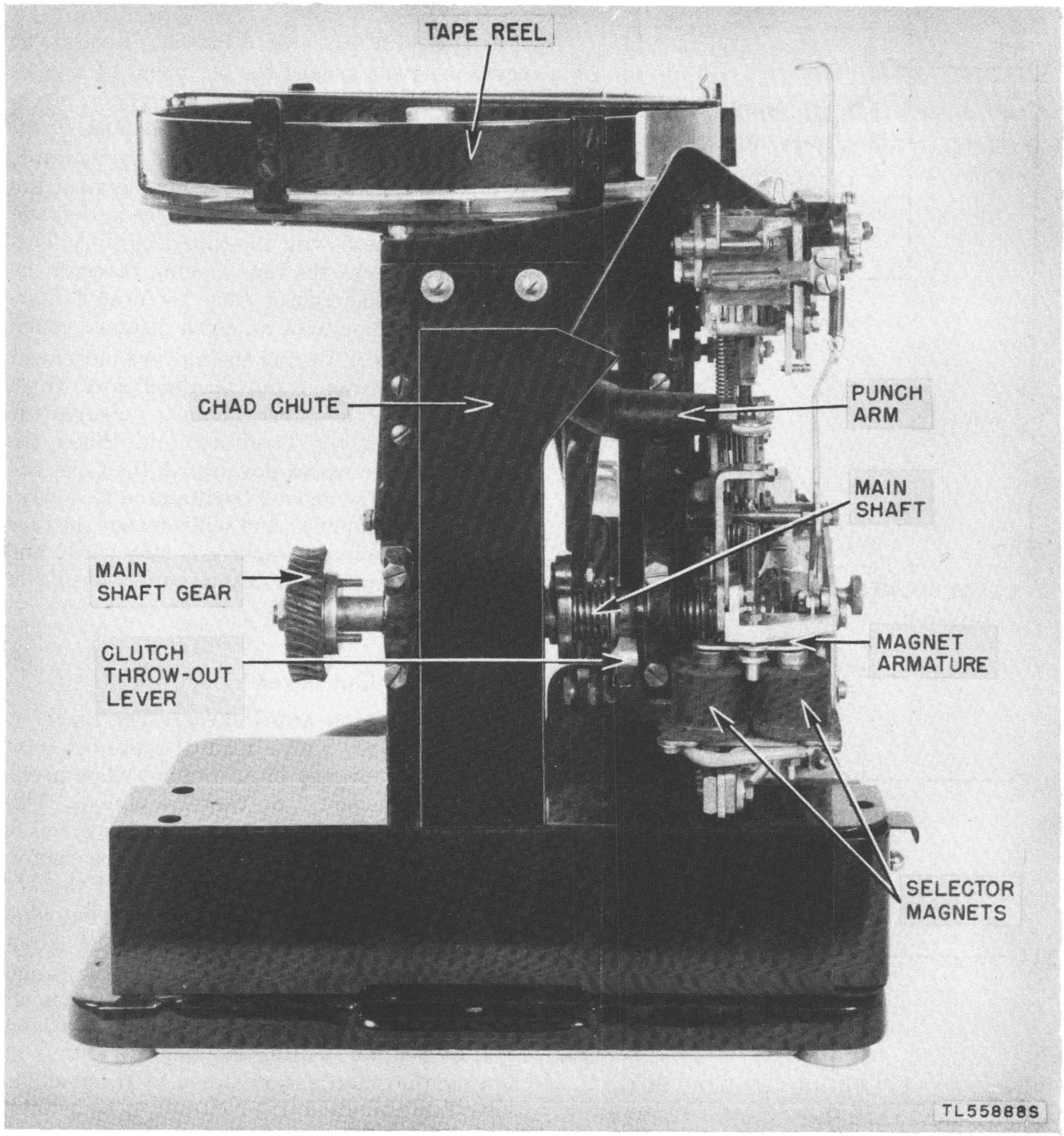

Figure 227. Back view of nontyping reperforator.

moves upward, the lock bail will move downward and hold the operated or selected transfer levers in position until the perforating operation has been completed and the punch hammer is returned downward, to its normal unoperated position. The lock bail will then be moved upward, releasing the selected transfer levers. The part of the punch hammer that is used as a guide for punch levers has a raised portion in the center, directly under the third punch from the inside. This raised portion, on the punch hammer, will operate its corresponding punch pin, the feel-hole punch pin, every time the punch hammer is operated. The feed-hole punch pin perforates small holes in the tape, which are used to feed the tape forward.

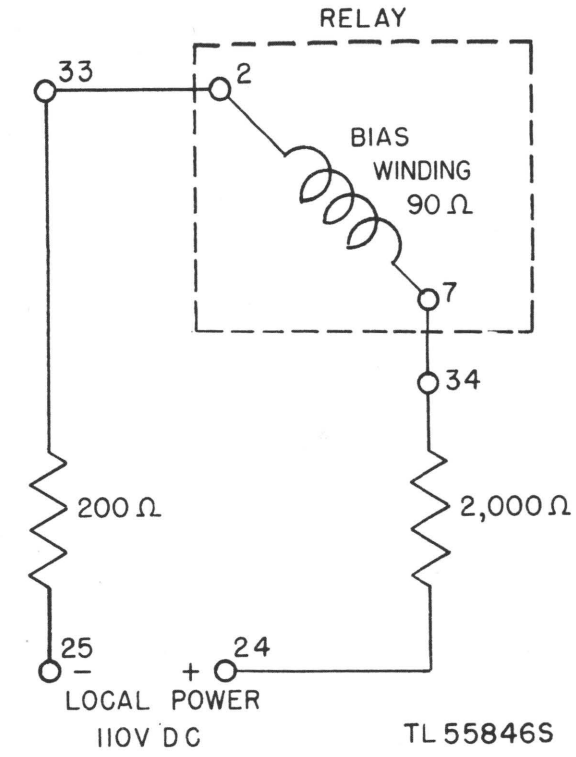

Figure 228. Biasing circuit of the relay.

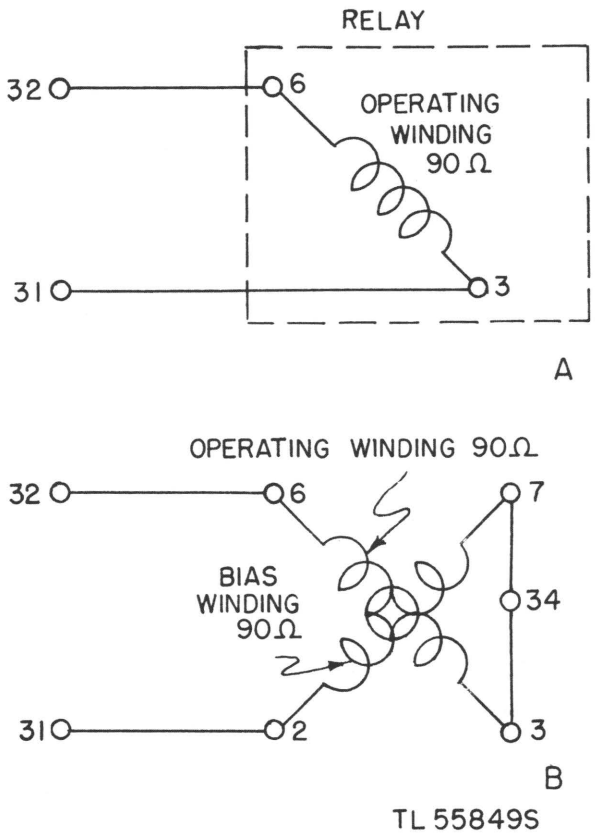

Figure 229. Line circuit for neutral and polar operation.

406. Tape-Feeding Mechanism

a. DESCRIPTION AND PURPOSE. Spaced at equal intervals around the periphery of a tape-feed roll, located in front of the punch block, is a series of projecting tape-feed pins which mesh with the feed holes punched in the tape. A tape-tension lever holds the tape against the tape-feed roll, keeping the feed holes in the tape in constant mesh with the tape-feed pins. This mechanism keeps the tape moving through the punch block and causes each perforated character on the tape to be an equal distance apart.

b. OPERATION. During the upward movement of the punch hammer, the tape-feed pawl, which is attached to the punch hammer, engages the next tooth on the tape-feed roll. When the punch hammer moves downward, the tape-feed roll will revolve, moved by the tape-feed pawl on the punch hammer, and will advance the tape one code combination space. A star wheel and detent are provided to insure equal spacing of the tape.

407. Space-Out Lever

a. DESCRIPTION AND PURPOSE. The reperforator is equipped with a manual space-out lever so that the tape may be spaced out when necessary, independently of the line signals. This lever may be used when starting a new roll of tape or to cause additional tape to be perforated at the end of a message so that the end of the message will be beyond the tearing edge.

b. OPERATION. The lower end of the space-out lever, when depressed, will cam the range-finder assembly bell crank out of engagement with the trip-latch plunger and the trip latch will be held away from the stop lever, thus allowing the selector-cam sleeve to revolve. The letters combination will continue to be selected and perforated until the space-out lever is released.

408. Circuit Analysis

A brief analysis for the circuits of the RPE26 nontyping reperforator is given in the subparagraphs below.

a. EXTERNAL. The external connections to the reperforator are made by means of three cords which are connected to the terminals on the base. These terminals are separated into

two groups and are numbered from 21 to 36, inclusive. The polarity of the connections and the color codes of the conductors in these cords are shown in figure 317.

(1) *Receiving cord.* This is a two-conductor cord with a plug (red shell) at one end and is connected to terminals Nos. 31 and 32 on the reperforator base.

(2) *D-c power cord.* This is a three-conductor power cord with a polarized plug at one end and is connected to terminals Nos. 24 and 25 and the ground screw on the reperforator base.

(3) *A-c power cord.* This is a three-conductor power cord with a polarized plug at one end and is connected to terminals Nos. 21, 22, and 23 on the reperforator base.

b. INTERNAL CIRCUITS. (1) *General.* The electric circuit of the RPE26 nontyping reperforator may be divided into the five separate circuits illustrated in figures 228 through 231 and in figure 317. The internal connections and the external terminals are indicated by solid black circles and by solid black circles within

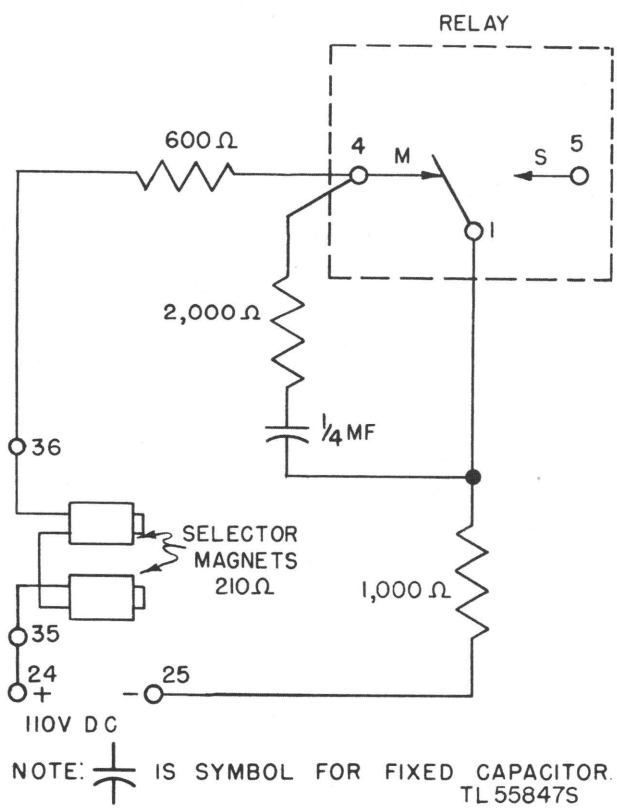

Figure 230. Selector magnet circuit.

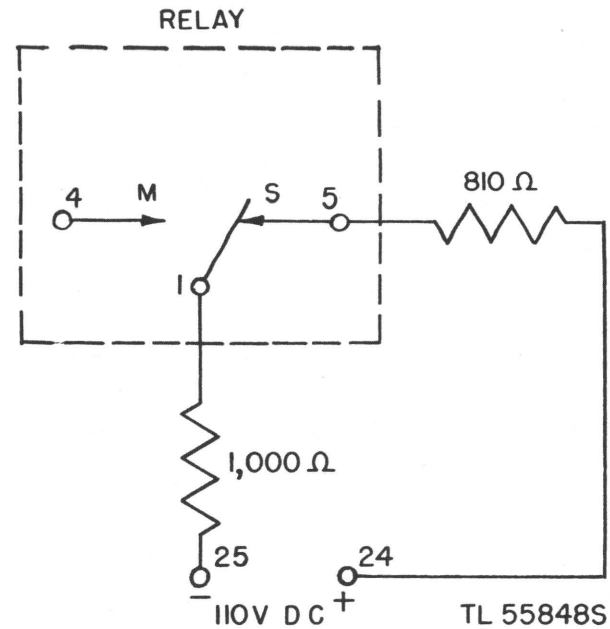

Figure 231. Shunt circuit.

circles, respectively, and are numbered to correspond to the numbers on the reperforator and in figure 317.

(2) *Biasing circuit of the relay* (fig. 228). The biasing circuit of the relay is a simple series circuit composed of the relay biasing (2–7) winding, one 2,000-ohm resistor and one 200-ohm resistor. The two resistors (with the resistance of the relay biasing winding) limit the current to approximately 27 milliamperes. Local power at 110 volts dc is applied to the terminals Nos. 24 and 25. This circuit is used only on neutral operation, being disconnected when the reperforator is used with polar signals.

(3) *Line circuit* (fig. 229). Two circuits are used for the line connection, one (fig. 229A) when neutral operation is desired, and the other (fig. 229B) when polar operation is desired. When changing from one type of service to the other, rewire the base of the reperforator so as to conform to the appropriate circuit illustrated in figure 229.

(4) *Selector magnet circuit* (fig. 230). The selector magnet circuit consists of the relay marking contacts, a 1,000-ohm resistor, a 600-ohm resistor, the selector magnet coils, and a source of 110-volt dc power, all in series. A 2,000-ohm resistor in series with a ¼-microfarad capacitor is shunted across the relay

marking contacts to reduce arcing at the contact points. Note that there is a total of 1,180-ohms resistance in the selector circuit.

(5) *Shunt circuit* (fig. 231). The shunt circuit consists of the relay spacing contacts, an 810-ohm resistor, a 1,000-ohm resistor, and the same source of 110-volt dc power as that used in the selector magnet circuit. The armature and 1,000-ohm resistor are common to both of these circuits and are connected into one or the other circuit depending upon whether the armature is against the marking or spacing contact. There is a total resistance of 1,810 ohms across the power source regardless of whether the armature is against the spacing or marking contact. This circuit design improves the voltage regulation of the power source.

(6) *Motor circuits* (fig. 317). The motor circuits are shown in figure 317. They are similar to the motor circuits of the typing reperforators discussed in book 1.

(7) *Filter circuits.* Recent models of the nontyping reperforators are equipped with the No. 92229 filter unit for reducing the interference to radio circuits caused by sparking at relay contacts. It also affords better protection for the relay contact points from the standpoint of wear.

Section XI. TEST EQUIPMENT

409. General

Information including the description and purpose of the most frequently used teletypewriter test sets is given in book 1, section XII.

Section XII. TROUBLE SHOOTING

410. Introduction to Trouble Shooting

Refer to book 1, section XIII, for an introduction to trouble shooting, trouble records, and methods of shooting troubles found in nontyping reperforators.

411. Tabular List of Trouble Conditions for Nontyping Reperforators

The most common trouble conditions that occur in the model 14 nontyping reperforators together with a listing of the probable causes are given in the following charts. This list of troubles does not represent all the troubles that might occur, or all the possible causes for each condition, but does include troubles that occur in the majority of cases. Specific troubles are listed as separate items. The possible causes or the items in which the causes may be found are listed under each heading. The references included in the chart furnish a cross-reference to other sections of this manual. The following list is an index to the trouble conditions covered by this chart.

Chart	Condition	Observed fault
A		Motor fails to start.
B	Starts.	Runs open.
C	Runs closed.	Cannot perforate.
D	Perforates.	
E	Perforates.	Has poor range.
		Garbles or makes occasional error.
	REPERFORATOR OPERATES CORRECTLY, EXCEPT:	
F		Perforator does not cut clean tape.
G		Machine emits grinding noise.

Trouble-analysis chart A. Nontyping, reperforator fails to start

Item No.	Items to be inspected or checked	Possible trouble	Corrective action	Reference data		
				Detailed function	Repairs	Adjustments
1	Power source	Low voltage, open, shorted.	Use another power source.	Par. 408	Pars. 414, 416	
2	Slip connections.	Dirty, loose.	Clean and adjust cont.			Par. 171c
3	Governor contacts.	Dirty or burned.	Clean or replace and adjust.	Par. 69	Par. 149	Par. 148
4	Main shaft.	Clutch dry or bearings frozen tight.	Lubricate or adjust.	Par. 399	Par. 419	Par. 463
5	Motor (internal).	Open windings or burned brushes.	Replace brushes or motor.		Par. 143	
6	Motor switch and switch circuit.	Switch open or loose, wiring bad.	Clear circuit or replace wiring.			
7	Power plugs and cords.	Loose connections, faulty wiring.	Tighten connections or replace wiring.	Par. 408	Par. 414	
8	Power terminal connections.	Loose.	Tighten connections.	Par. 408	Par. 414	

Note. Refer to figure 317 for wiring diagrams of the nontyping reperforator.

Trouble-analysis chart B. Motor starts, reperforator runs open

Item No.	Items to be inspected or checked	Possible trouble	Corrective action	Reference data		
				Detailed function	Repairs	Adjustments
1	Line connections.	Loose connection in plug, dirty plug, open cord.	Locate and clear trouble or replace wiring.	Par. 408	Pars. 414, 421	
2	Line-relay contact.	Improper adjustment, dirty or burned contact points.	Clean contacts and adjust.	Par. 408		
3	D-c power source.	Low voltage, rectifier fuses burned, short in rectifier.	Replace fuse or use different power source.	Par. 408	Pars. 414, 421	
4	D-c power cords and plugs.	Loose connections in plug, bad cords. Faulty terminal connections.	Tighten connections or replace cord.	Par. 408	Pars. 414, 421	
5	Internal wiring.	Damaged or excessively oil-soaked.	Clean or replace.	Par. 408	Par. 414	
6	Selector magnet.	Improper adjustments, loose connections.	Adjust.	Par. 400		Par. 458
7	Selector trip-off eccentric screw.	Operates trip-off latch when armature is in mark position.	Adjust.	Par. 400	Par. 420	Par. 449

Trouble-analysis chart B. Motor starts, reperforator runs open (Continued)

Item No.	Items to be inspected or checked	Possible trouble	Corrective action	Reference data		
				Detailed function	Repairs	Adjustmests
8	Main-shaft clutch throw-out lever.	Loose, broken, or missing spring.	Replace spring and adjust.	Par. 404	Par. 420	Par. 460
9	Stop-lever eccentric screw.	Improper adjustment,	Adjust.	Par. 400		Par. 453
10	Armature stop.	Marking stop nut set too high.	Adjust.	Par. 400		Par. 450

Note. Refer to figure 317 for wiring diagrams of the nontyping reperforator.

Trouble-analysis chart C. Reperforator runs closed but cannot perforate tape

Item No.	Items to be inspected or checked	Possible trouble	Corrective action	Reference data		
				Detailed function	Repairs	Adjustments
1	External equipment.	Improper relay adjustment.	Adjust.		Par. 421	
2	Selector armature.	Spring loose or missing, armature pivots binding.	Replace spring and adjust.	Par. 400		Par. 447
3	Selector trip-off eccentric screw.	Does not operate trip-latch plunger.	Adjust.	Par. 400	Par. 420	Par. 449
4	Main-shaft clutch throw-out lever.	Not operated by sixth cam on cam-sleeve assembly.	Adjust.	Par. 404	Par. 420	Par. 460
5	Transfer levers.	May be out of line with selector T-levers.	Adjust.	Par. 400		Par. 466

Note. Refer to figure 317 for wiring diagrams of the nontyping reperforator.

Trouble-analysis chart D. Nontyping reperforator perforates tape, range finder has poor range

Item No.	Items to be inspected or checked	Possible trouble	Corrective action	Reference data		
				Detailed function	Repairs	Adjustments
1	Motor.	Incorrect speed.	Adjust speed.	Par. 68		Par. 29
2	Motor governor.	Burned or dirty contact points.	Clean or replace contacts.	Par. 69	Pars. 147-153	
3	Line current (dc).	Too high or too low.	Adjust.		Pars. 414, 421	
4	Line relay.	Improper adjustment, dirty contact.	Clean or adjust.	Par. 408	Par. 421	Par. 493
5	Selector-armature spring.	Improper tension.	Adjust.	Par. 401		Par. 449
6	Selector-armature pivots.	Too tight.	Adjust.	Par. 401		Par. 447
7	Binding of swords, T-levers, or code bars.	Adjustments too tight, wrong lubricant, dirt in moving parts.	Clean, adjust, and lubricate.	Par. 401		Par. 446
8	Teletypewriter at other end of line.	Motor running too slow or too fast.	Ask for check on motor speed.		Par. 419	Par. 29
9	Magnet bracket.	Improper alinement.	Adjust position.		Par. 421	Par. 457

Note. Refer to figure 317 for wiring diagrams of the nontyping reperforator.

Trouble-analysis chart E. Nontyping reperforator perforates garbled letters or occasional errors

Item No.	Items to be inspected or checked	Possible trouble	Corrective action	Reference data		
				Detailed function	Repairs	Adjustments
1	Line current.	Too high or too low.	Adjust.		Pars. 414, 421	
2	Motor speed (*a*) high. (*b*) low.	Dirty contacts, burned points. Improper governor adjustment, friction clutch drag on main shaft.	Clean or replace contacts; adjust governor and main shaft.	Par. 68	Pars. 147-153	Par. 29
3	Roller arm.	Improper adjustment.	Adjust.	Par. 401		Par. 469
4	Selector magnet bracket.	Improper alinement.	Adjust.			Par. 457
5	Selector armature.	Binding at pivots.	Adjust.	Par. 400		Par. 447
6	Selector armature bracket.	Improper adjustment.	Adjust.			Par. 449
7	Armature stops.	Improper adjustment.	Adjust.	Par. 400		Par. 450
8	Locking bail eccentric shaft.	Improper adjustment.	Adjust.	Par. 403		Par. 468
9	Main-shaft clutch throw-out lever.	Binding at pivots.	Adjust.	Par. 404	Par. 420	Par. 460
10	See also chart D.					

Note. Refer to figure 317 for wiring diagrams of the nontyping reperforator.

Trouble-analysis chart F. Nontyping reperforator operates correctly but fails to cut clean tape

Item No.	Items to be inspected or checked	Possible trouble	Corrective action	Reference data		
				Detailed function	Repairs	Adjustments
1	Punch-hammer adjusting nut.	Improper adjustment.	Adjust.			Par. 467
2	Perforator unit.	Improper alinement	Adjust.	Par. 88		Par. 464
3	Transfer levers.	Out of alinement with T-levers, loose locknut on transfer lever.	Adjust.	Par. 88		Par. 466
4	Locking-bail eccentric shaft.	Improper alinement.	Adjust.	Par. 403		Par. 468
5	Tape-feed roll detent.	Feeding improperly.	Adjust.	Par. 97		Par. 475
6	Feed pawl.	Improper alinement causing backlash.	Adjust.	Par. 97		Par. 479
7	Pins.	Broken or worn.	Repair or replace.	Par. 97		
8	Tape guide.	Gummed up, clogged with chad, bent.	Clean, repair, or replace.	Par. 97		Par. 482

Note. Refer to figure 317 for wiring diagrams of the nontyping reperforator.

807975 O - 48 - 16

Trouble-analysis chart G. Nontyping reperforator emits grinding noise

Item No.	Items to be inspected or checked	Possible trouble	Corrective action	Reference data		
				Detailed function	Repairs	Adjustments
1	Motor-mount adjustment screws.	Improper drive gear clearance.	Adjust.		Par. 419	Par. 459
2	Main-shaft bearings.	Broken or burned.	Replace bearings.	Par. 399	Par. 419	Par. 463
3	Main-shaft clutch throw-out lever.	Improper clutch clearance.	Adjust clearance.	Par. 404	Pars. 419, 420	Par. 460
4	Main-shaft and motor pinion.	Backlash due to an improper alinement.	Adjust.	Par. 399	Par. 419	Par. 459

Note. Refer to figure 317 for wiring diagrams of the nontyping reperforator.

412. Localization of Electrical Troubles

Refer to paragraph 113 for information concerning the localization of electrical troubles.

413. Use of Test Unit I-236 for Localizing Electrical Trouble

Instructions for the proper use of Test Unit I–236 in localizing electrical trouble are given in paragraph 114.

414. Localization of Electrical Power Trouble

Power troubles may show up in various ways. If the reperforator motor does not run or cannot be brought up to proper speed, the trouble may be either external or within the reperforator. The following step-by-step procedure is used to locate the trouble.

a. TESTING LINE VOLTAGE. Using Test Unit I–236 or an a-c voltmeter if the power supply is ac, or a d-c voltmeter if the power is dc, check the line voltage. If the line voltage is between 110 and 125 volts, with the reperforator connected and the motor switch on, the trouble is within the reperforator.

b. TESTING REPERFORATOR POWER CORD AND PLUG. The trouble may be within the reperforator power wiring, or in the connection between the cord and the power outlet. Leave the power-cord connector in the power outlet. With the reperforator cover removed, measure the voltage across terminals 21 and 23 (see schematic wiring diagram, fig. 317). If the voltage is noticeably less than the voltage at the power outlet, the trouble is between the machine and the power source. If the trouble cannot be found in the cord connector or in the connection between the connector and the power outlet, then there is an open in the cord.

c. TESTING FOR OPEN GOVERNOR CONTACTS. If there is a voltage between terminals 13 and 15 of the motor, short the governor-brush spring. If the motor speeds up, check the brush-spring tension. The trouble will probably be in dirty or burned governor contacts or a broken governor spring.

d. TESTING FOR OPENS IN WIRING WITHIN BASE UNIT. If no voltage can be measured between terminals 13 and 15 of the base unit, the trouble can be localized by placing one voltmeter lead on terminal 21 and the other lead on each of the following terminals in turn: ON-OFF power switch terminals, terminal 15 (spring contact terminal). Faults occur between the terminal where there is the first indication of voltage and the preceding terminal. It is necessary to follow the appropriate wiring diagram closely when locating trouble in the above manner.

e. LOCATION OF CROSSES. Crosses between the motor circuit and the receive circuits may be the result of damaged insulation on adjacent leads and the bare copper wire making contact, or the terminals of a part in one circuit making contact with the terminals of a part or a lead with damaged insulation in the other circuit. Test for crosses as follows:

(1) Disconnect the reperforator from all external power and signal circuits.

(2) Connect one lead of Test Unit I–236 or an ohmmeter to one terminal of the power plug.

(3) Touch the end of the other lead of Test Unit I–236 (or ohmmeter, whichever is used) to the tip and sleeve of the receive (red) plug.

(4) Connect the lead of Test Unit I–236 to the other terminal of the power plug and repeat the process.

(*a*) Any indication of a closed circuit signifies a cross.

(*b*) The position of the test leads that gives the greatest indication usually shows which sides of the circuit are crossed.

(5) Check these portions of the circuits carefully to locate the exact point of the cross.

f. LOCATION OF GROUNDS. Refer to paragraph 118 for instructions on locating grounds.

415. Isolation of Trouble in Receive Circuit

a. GENERAL. The actual connections used to arrange the receive circuit for testing will vary depending upon the equipment with which the nontyping reperforator is being operated. When no associated equipment is available to provide a 60-milliampere test circuit, a dummy circuit may be set up as described in *b*. *c*, and *d* below.

b. USE OF BATTERY, RESISTOR, AND MILLIAMMETER TO SET UP A TEST CIRCUIT. Refer to paragraph 116 for instructions on setting up a test circuit using a battery, resistor, and milliammeter.

c. SETTING UP DUMMY TEST CIRCUIT. Figure 93 shows a dummy test circuit which may be used to localize electrical trouble when other teletypewriter equipment is not available.

d. SETTING UP TEST CIRCUIT WITH LINE UNIT BE–77–( ). The following steps are used in connecting the line unit as a dummy circuit.

(1) Connect power plug of Line Unit BE–77–( ) to a d-c power source such as Rectifier RA–87 (115-volts dc).

(2) Connect the red receive plug of the reperforator to the receive jack of the line unit.

(3) Turn line rheostat of line unit to IN.

(4) Place relay switch of line unit to RELAY OUT OF CIRCUIT.

(5) Place power control switch of line unit to LOCAL.

(6) Adjust line rheostat until line unit meter reads 60 ma with the meter key in the MA position.

Note. Step (4) above connects the send and receive plugs in series when they are inserted into the line unit jacks. These line unit jacks are of the closed circuit type, therefore, removal of either plug leaves the remaining plug in a closed circuit.

416. Circuit Continuity Tests

a. When the test circuit is connected, current should flow, indicating that the receive circuit of the reperforator is closed. If no current flows, then an open must be present in the receive circuit.

b. If when testing this equipment in conjunction with a teletypewriter the circuit is running closed, send RY'S and test sentences with the teletypewriter to check the operation of the nontyping reperforator as a unit. If the reperforator operates without error, then the reperforator is trouble-free. If the receive circuit is shorted, the reperforator will run open.

417. Localization of Trouble in the Receive Circuit

a. GENERAL. Trouble within the receive circuit can be localized by the use of Test Unit I–236 or an ohmmeter. The receive circuit consists of the red receive plug and cord, the selector magnets, and wiring, connected in a series circuit.

b. LOCATION OF OPENS. With Test Unit I–236 or an ohmmeter, test for continuity of the receive circuit (fig. 232). Connect the test equipment to the tip and sleeve of the receive (red) plug. If there is an indication of an open, the following tests should be made.

(1) *Selector unit.* Testing across the coils of the selector magnet in series, the resistance should be about 210 ohms. The resistance of each coil when tested alone should be about 105 ohms. Test Unit I–236 will not measure resistance but it will indicate by the brightness of the lamp whether the resistances of the two coils are approximately equal. If the magnet circuit is clear, the open is in the base wiring.

(2) *Base wiring.* If the above tests fail to locate the open, then the open is in the receive cord or in the base wiring. The following tests will locate the open quickly and accurately. Connect the leads of Test Unit I–236 or an ohmmeter to the tip and sleeve of the red (receive) plug. Connect a length of insulated wire to the sleeve of the red plug and with the other end of the wire short out various parts of the receive circuit by touching in successive order

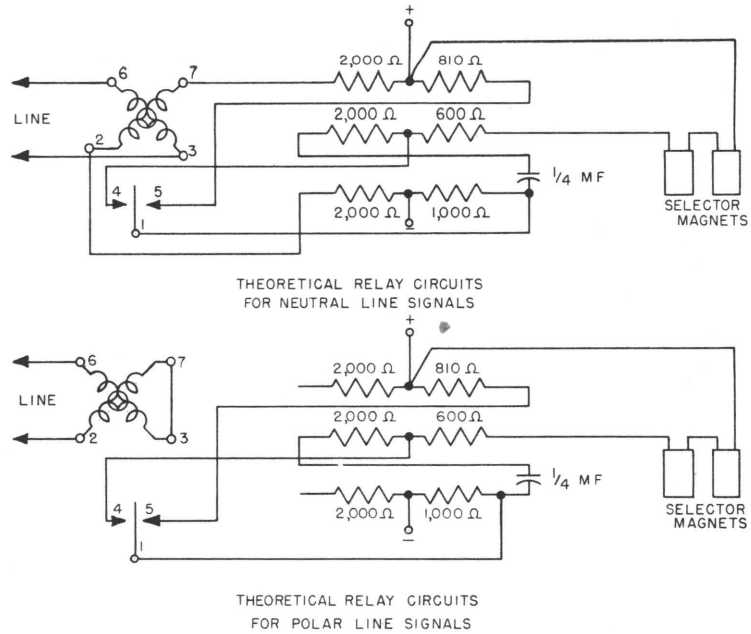

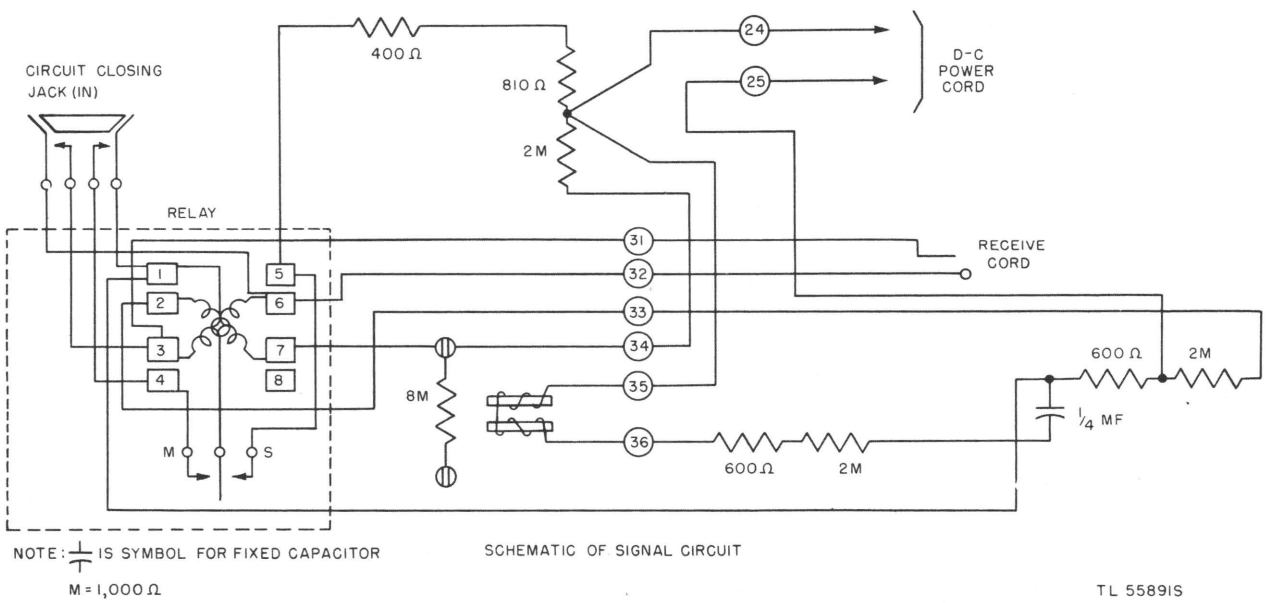

Figure 232. Schematic diagram of signal circuit.

the following terminals and contacts: 31, 6, 1, 36, selector magnets 35, 25, 24, 33, 32, and sleeve of the red plug. The open will be between the first contact which shorts the receive plug when touched, and the preceding contact.

c. LOCATION OF SHORTS. Shorts in the receive circuit will prevent the full line current from reaching the selector magnets. Shorts may occur between two wires or between wires and metal parts. A short in the wiring will be indi-

cated on the test set. Inspect the reperforator for shorts in the following sequence: Measure the resistance between the tip and sleeve of the receive plug. If the meter indicates a short within the wiring, open the wiring at each of the following terminals in turn and measure the resistance at the tip and sleeve of the red plug: 31, 6, 1, 36, selector magnets, 35, 25, 24, 33, 32. The short is between the first terminal opened which does not remove the short indication of the meter, and the preceding terminal tested. Refer to the schematic diagram (fig. 232) for the reperforator being tested when tracing shorts.

418. Introduction to Localization of Mechanical Troubles

a. When a mechanical function has been observed either to fail to operate or to operate in a faulty manner, it is necessary to localize or isolate the trouble in a particular adjustment or series of adjustments. The experience of the repairman and the over-all condition of the equipment will indicate which of the following two methods is the better approach to various troubles.

(1) One method involves checking the individual requirement for *all* adjustments in the subassembly or mechanism. Use the related data found in the detailed requirements and adjustment procedures, section XIV, to determine the sequence to be followed.

(2) A second method involves setting up by hand the selecting mechanism and completing the operation by manually rotating the motor, shaft, gear, or cam that normally drives the assembly. This method is usually quicker when only one adjustment is faulty and the remainder of the mechanism is in good condition. In such cases only the related adjustments need to be checked.

Caution: *In some cases evidences of faulty operation may be apparent only when the mechanism is power-driven.*

b. Additional aid in locating mechanical troubles may be secured from records of previous troubles and adjustments.

c. The procedure for localizing mechanical trouble is divided into the effects of the trouble as follows:

(1) Reperforator does not start.

(2) Reperforator runs open.

(3) Reperforator scrambles letters and functions.

419. Locating Trouble When Nontyping Reperforator Does Not Start

The following conditions should locate trouble if the nontyping reperforator will not start.

a. ELECTRICAL TROUBLE. See paragraph 414 for electrical power troubles. Electrical trouble in the motor circuit may be due to mechanical adjustments of contacts, and the tests for electrical trouble will accurately locate these troubles.

b. EXCESSIVE MOTOR OR MAIN-SHAFT TORQUE. With the reperforator cover removed, turn the motor by hand in the direction of normal operation. If the motor cannot be easily turned by hand, make the following tests to locate the cause of the binding.

c. BINDING AT THE MAIN-SHAFT DRIVE GEAR. If, when turning the motor by hand as given in *b* above, the motor is hard to turn, check the motor pinion and the main-shaft gear for binding.

d. MOTOR BEARINGS BIND. Loosen the screw holding the motor pinion, and turn the motor by hand. If the motor does not turn easily, check for burned motor bearings.

e. MAIN SHAFT BINDS. With the pinion loose, turn the governor by hand. If the main shaft will not turn or if it turns with a great effort, perform the following:

(1) Hold the selector armature to the mark position and turn the shaft, if possible, until the selector sleeve and the punch-arm cam do not move when the shaft is turned. If the main shaft still binds, the trouble is within the main shaft.

(2) Remove the main shaft and check the main-shaft bearings and the various friction clutches for excessive friction or binding.

(3) Replace the pinion screw and tighten.

420. Locating Trouble When Nontyping Reperforator Runs Open

Examine the following situations if the typing unit runs open:

a. ELECTRICAL TROUBLE. With the reperforator cover removed, press the selector armature to the mark position. If the armature does not bind and the reperforator runs closed, the trouble is electrical. If the reperforator does not run closed with the armature in the mark position, the trouble is mechanical and within the reperforator.

b. SELECTOR TRIP-OFF MECHANISM. (1) Examine the selector sleeve when the selector armature is in the mark position. If the selector sleeve rotates under these conditions, the trouble is in the selector trip-off mechanism.

(2) Loosen the trip-off eccentric screw and turn the screw until the screw head does not touch the trip-latch plunger. If the selector-cam sleeve does not stop rotating, the trouble may be in the stop lever.

(3) Loosen the motor pinion, and turn the governor by hand while holding the stop lever from rotating. If the selector-cam sleeve is stopped after one revolution, the trouble may be in the trip latch or in the trip-latch spring, or in a worn stop-lever.

c. MAIN-SHAFT CLUTCH THROW-OUT LEVER. If the selector sleeve does not rotate when the selector armature is in the mark position, but the punch-arm cam continues to rotate, the trouble is in the clutch throw-out lever.

(1) With the motor pinion loose and the selector armature held in the mark position, rotate the governor slowly and examine the clutch throw-out lever.

(2) If the clutch throw-out lever does not engage the clutch throw-out cam, check for a missing spring or a broken or missing clutch throw-out lever.

(3) If the clutch throw-out lever does engage cam, check clearance between clutch jaws.

(4) Replace the pinion screw and tighten.

421. Nontyping Reperforator Scrambles Letters and Functions

There are several possible sources of trouble external to the reperforator when it scrambles letters and functions. Such trouble may be due to the external line characteristics, improper line current, or external relays which cause a biased signal to be received even when the signal is sent perfectly from an associated teletypewriter keyboard. To eliminate line troubles set up a dummy signal circuit as explained in paragraph 116.

422. Testing the Reperforator with a Test Circuit

Adaptation of test circuits will vary with the experience of repair personnel. The sequence of testing given below is recommended for genral use by all personnel involved in the repair of nontyping reperforators.

a. Set up a test circuit using a teletypewriter set such as Teletypewriter TT–7/FG if no test equipment, such as Test Set TS–2/TG, is available.

b. Type test sentences to see if errors still occur in the tapes perforated by the nontyping reperforator.

c. With the cover removed, check the code position of the transfer levers for each letter or operation. See figure 21 for the teletypewriter code. Facing the reperforator from the selector unit side, the T-levers are in the *up* (or left) position for mark and in the *down* (or right) position for the space impulse.

d. Use the RY combination to get complete reversal of the five selectors and T-levers. Any transfer lever that is sticking can be readily detected.

e. If no results are obtained from the test described in *a* through *d* above, the trouble is probably in the adjustment of the selector unit. After checking the tension of the selector-armature spring, make a complete adjustment of the selector unit according to the requirements given in section XIV, book 2. Trouble in the selector unit will be evident only if the nontyping reperforator is power-driven.

Section XIII. REPAIRS AND REPLACEMENTS

423. General Repair Information

a. This section describes the repairing and replacing of defective nontyping reperforator parts and does not duplicate information on preventive maintenance procedure furnished in part three. The repair instructions furnished

are not intended as a complete shop guide listing every possible work operation that might be involved in large-scale dismantling and repairing of salvaged reperforators. The procedures included are intended to prescribe the operations involved in replacing and repairing those parts, assemblies, and units subject to the greatest amount of wear.

b. Because of variations in service needs and in the repair and supply facilities available, definite rules cannot always be given specifying exactly which parts, assemblies, or units should be repaired and which should be replaced. As only a limited number of the many small reperforator parts can be satisfactorily repaired, the repair instructions consist primarily of detailed disassembly, cleaning, replacement, reassembly, adjustment, and lubrication procedures to be followed in overhauling a complete reperforator or repairing a single unit or assembly. Actual repair instructions are included for those parts and assemblies which can be satisfactorily repaired under average conditions.

c. Except in cases of extreme emergency, all repairs to reperforators should be completed by personnel thoroughly trained in teletypewriter maintenance. IT IS IMPORTANT TO KNOW WHAT *NOT* TO DO AS WELL AS WHAT TO DO, WHEN MAKING TELETYPEWRITER REPAIRS. Equipment operating with minor faults may fail completely as a result of efforts by inexperienced personnel to correct apparently simple defects.

d. Inspecting, cleaning, and lubricating, completed while making repairs, should be performed in accordance with preventive maintenance procedures described in part three and additional instructions in this part. All adjustments should be completed in accordance with the detailed requirements and adjustments in section XIV, book 2. Refer to section VIII, books 1 and 2, for moisture- and fungiproofing instructions.

e. General instructions grouped in the paragraphs at the front of this section are intended for use when a complete unit is removed and another (new or repaired) unit is installed. These general instructions do not include disassembly, cleaning, repair, replacement, and reassembly information which applies only to the repairing and replacing of individual parts.

424. Indexing of Repair and Replacement Procedures

Refer to the general index in this manual for the location of paragraphs in this section giving detailed repair and replacement instructions for individual parts and subassamblies. The paragraphs group the related topics for each of the principal assemblies.

425. Circuit Connections During Repairs

a. OPERATION OF EQUIPMENT DURING OVERHAUL. Refer to paragraph 128 for general instructions regarding the operation of the nontyping reperforator during repairs. Temporary power and signal circuit connections are discussed in the subparagraphs below.

b. TEMPORARY POWER SUPPLY FOR WORKBENCH TESTING. Power requirements for governed series and synchronous motors are given in paragraph 129. For workbench operation connect the power leads to terminals 13 and 15. Refer to the wiring diagram (fig. 317) for information on strapping and changes in the wiring necessary for operation of the various motors which may be used with the reperforator.

c. SIGNAL CIRCUIT CONNECTIONS. Usually the reperforator is wired for neutral operation. If polar operation is required, refer to the notes in figure 317. For neutral operation connect the receiving line to terminals 31 and 32. The other end of the line must be connected to sending teletypewriter equipment which is known to be in proper adjustment.

426. Instructions for Removing Principal Reperforator Units

a. COVER. Lift the cover straight up.

b. REPERFORATOR UNIT. Remove the two tape-reel bracket mounting screws and the tape-reel mounting-arm screw, and the tape reel. Disengage the punch arm from the punch hammer by backing off the punch-arm adjusting nut as far as it will go. Remove the punch-arm spring, remove the space-out lever from its lower guide post by removing the guide-post adjusting nut. Remove the two punch-block bracket screws on the top of the main frame and lift the reperforator unit straight up off the machine taking care not to damage the T-levers and transfer levers when disengaging them.

c. MOTOR UNIT. Remove the three motor-mounting screws that fasten the motor to the base.

427. General Disassembly and Reassembly Procedure

a. PREPARATION FOR DISASSEMBLY. Before starting to disassemble the reperforator, take the following preparatory steps.

(1) Arrange a clean place to work on a bench, table, or box. Make sure that dust or dirt will not fall or be blown into the mechanism while it is disassembled. When rough surfaces are used as a workbench, place several thicknesses of paper or some kind of cloth material on the boards to prevent small parts from becoming lost or dirty.

(2) Secure several small clean cardboard, wood, or metal containers to keep the parts of different assemblies from becoming lost or mixed together.

(3) Arrange the necessary tools and materials where they will be readily accessible during the progress of the repair work. Be sure the containers used for the special cleaning operations are located where dirt will not enter them and they will not be easily upset.

b. DISASSEMBLY PROCEDURES. (1) Disconnect the power and signal-line connections, remove the reperforator cover, and dismount the selector unit, motor unit, etc., in the manner described in subparagraphs below.

(*a*) *Removing connections.* Remove the two power cords and the signal cord from their receptacles. Turn the power off before disconnecting the cords.

(*b*) *Removing cover.* Open the top of the cover to see that no parts of the reperforator are hung on the lining of the cover. Close the top and, using the handles near the bottom of the cover, lift straight up.

(*c*) *Removing selector unit.* Remove the three screws holding the selector unit to the reperforator frame. Pull the selector unit outward being careful not to damage the selector levers. If necessary to remove the range-finder assembly loosen the mounting screw on the high end of the scale, remove the other mounting screw, and slip the assembly off the loose screw.

(*d*) *Removing motor unit.* Remove the three motor mounting screws with a long screw driver. With both hands move the motor away from the motor terminal block.

(*e*) *Removing line relay.* The line relay is removed by pulling outward on the relay cover.

(2) Remove the roll of tape, and any paper tags or forms that may be subject to damage while the reperforator is being cleaned and repaired.

(3) Before disassembling the various units and assemblies, clean any excess quantities of oil, grease, or dirt from around the nuts, screws, and fasteners that must be loosened or removed so that the wrenches and other tools will fit properly.

(4) Proceed to disassemble the various parts and assemblies using the particular tools designed for each item.

Note. DO NOT DISASSEMBLE ANY UNITS OR ASSEMBLIES BEYOND THE POINT NECESSARY TO THOROUGHLY INSPECT AND CLEAN THE ENTIRE MECHANISM AND REPAIR OR REPLACE ANY DEFECTIVE PARTS.

(5) When small parts are disassembled, place them in a container and mark them to identify their origin.

(6) Refer to appendix II for illustrations showing location of parts and part numbers.

(7) Vary the sequence with which the work is completed in any manner that will make it possible to speed up the work involved without sacrificing the quality. As an example, most experienced mechanics prefer to complete the cleaning, washing, drying, etc., of as many parts as possible before starting to repair, adjust, and lubricate the various units. This permits an early and accurate appraisal of the number of parts requiring repair or replacement and the amount of time needed to complete the work.

428. Instructions for Special Cleaning Procedures

a. GENERAL. Equipment that has been disassembled for major overhaul can be thoroughly cleaned by immersing and brushing the parts in containers of the appropriate cleaning fluids.

Caution: Do not immerse equipment wiring, resistors, capacitors, motor armature, or motor windings.

b. USE OF SPECIAL CLEANING MATERIALS. The following cleaning fluids normally available

through supply channels, are satisfactory for use as described below.

(1) Use cleaning compound, stock No. 6G236.7, to remove oil, grease, gummy dirt. Soak 10 to 15 minutes and flush with very hot water.

(2) Use dry-cleaning solvent (SD) to remove oil, grease, gummy dirt, and paper lint.

(3) Use carbon tetrachloride only for cleaning electrical contacts.

c. DRYING. (1) *Wiping.* Dry parts by wiping with a clean, dry cloth. Be careful to dry the cleaning fluid from all the crevices of the parts.

(2) *Oven drying.* Dry the parts in an improvised oven heated with electric lamps and adjusted to maintain a temperature of about 160° F.; leave parts in the oven from 1 to 2 hours.

429. Inspection Procedure for Major Repairs

a. GENERAL. The inspection procedures for a major overhaul include all items listed in the preventive maintenance check list in part three together with additional items which may be inspected while the reperforator is disassembled. The inspection will be made to determine which parts are satisfactory for reuse, which require repairs, and which must be replaced with new parts. If the reperforator is damaged by foreign objects or during shipment, it may only be necessary to disassemble and inspect one of the principal units and give the remainder of the reperforator a preventive maintenance inspection.

b. FREQUENCY OF MAJOR OVERHAULS. Wide variations in the age and general physical condition of the reperforator and the experience of the lower echelon maintenance personnel who complete the preventive maintenance work affect the need for disassembling the equipment for a major overhaul. Differences in the climatic conditions under which the equipment is operated also affect the length of time between major overhauls. Do not completely disassemble reperforators until the regular preventive maintenance inspection indicates that the general wear on the parts has reached the point where they should be disassembled to permit a thorough inspection. Reperforators operating from 8 to 12 hours per day will ordinarily not require a complete overhaul by a higher echelon shop more often than at 6- or 8-month intervals. Reperforators operating less than 8 hours per day may be maintained in such condition that a complete overhaul is not warranted even at the end of a year in service; very old and well-worn equipment operating in tropical regions may require a major overhaul every third or fourth month. *In all cases the thoroughness of the preventive maintenance work performed by the first and second echelon personnel is the principal factor in determining how frequently the reperforator must be taken out of service and returned to a higher echelon shop for a major overhaul.*

c. PROCEDURE. Make the inspection incidental to repairs after all parts have been thoroughly cleaned. Include all related items listed in the preventive maintenance check list in paragraph 384 and in addition, include a thorough inspection of the wearing surfaces of gears, cams, levers, springs, bearings, etc., which can be inspected only after the equipment is disasembled. While the parts are disassembled, make a thorough inspection of the surfaces of all castings and supporting parts to determine that no breaks or cracks exist. Inspect the condition of all wiring, insulating strips, and terminal blocks while they are accessible. Check carefully the surface condition of all clutches, commutators, contacts, etc., and the end play of bearings in accordance with detailed instructions in other paragraphs of this section and related paragraphs in requirements and adjustment data in section XIV, book 2.

430. General Reassembly Procedure.

Reassemble all parts, subassemblies, and units in accordance with the following provisions:

a. Replace all worn or broken parts that cause malfunctioning of the reperforator and adjust according to directions in the appropriate paragraph in section XIV, book 2. Replace, while the equipment is disassembled for checking and repair, any worn parts that have not caused trouble but are likely to before the next complete overhaul of the reperforator.

b. Assemble replaced parts and associated parts firmly. Tighten all screws, nuts, and bolts, carefully.

c. Readjust all parts disturbed or replaced during repairs at the time of, or immediately after, their assembly.

d. When dented or flattened areas prevent proper turning and adjusting, remove, repair, or replace the damaged parts.

e. Restore to shape and re-use bent or distorted parts, provided no cracks result likely to cause future failure in service, and no hardened surfaces have softened by repairs.

f. If the locking edges of lockwashers removed during repairs are rounded, replace the lockwashers.

g. Replace any screws or nuts with damaged heads.

h. When screws, nuts, or other parts are locked in place by locknuts, don't loosen or remove these parts without first loosening the locknut. (Such a procedure is likely to damage the threads.) Set up tightly any loosened or removed parts on reassembly.

i. Remove slivers and sharp burrs that are a hazard.

431. Instructions for Replacing Principal Reperforator Units

The order of replacing the units will vary with the amount of repair work involved. In all cases assemble the component assemblies that make up a unit into that unit before replacing the unit in the machine.

a. REPLACEMENT OF SELECTOR UNIT. (1) Connect the two line wires to the proper posts on the armature.

(2) Place the unit back on the machine. Take care not to damage the selector unit with the selector-cam sleeve and friction washer.

(3) Guide the T-levers into the transfer levers. Make sure that each T-lever corresponds with its proper transfer lever.

(4) Replace the two selector-unit bracket mounting screws and tighten them firmly.

(5) Replace the lower space-out lever guide post except the guide-post washer and locknut.

(6) Reposition the space-out lever over the lower guide post and replace the upper guide-post screw and tighten firmly.

(7) Replace the space-out lever spring and the lower washer and locknut. Tighten just enough to allow the lever to work freely without binding.

(8) Reinstall the range-finder assembly. Take care that the space-out lever is in its right place and that the trip-latch stop lever is not jammed.

(9) Position the space-out lever trip end to meet its proper requirement by means of its lower guide post, and by bending of the lower end of the space-out lever.

b. REPLACING THE MAIN SHAFT. (1) Replace the main shaft by inserting the selector cam and friction washer through the opening in the selector unit. Take care not to damage the selector unit or the selector-cam sleeve indents. Place the main-shaft bearings into their proper bearing brackets while lifting the punch-arm lever out of the way.

(2) Replace the main-shaft bearing clamps and tighten the screws just enough to allow proper positioning of main shaft by light taps.

(3) Position the main shaft by alineing the selector-cam sleeve indents with their respective selector levers, and tighten the four main-shaft bearing-clamp mounting screws.

(4) Insert the punch-arm adjusting link into the punch hammer and adjust to meet requirements given in section XIV, book 2.

(5) Replace the chad chute by means of its two mounting screws.

c. REPLACING THE MOTOR UNIT. (1) Mount the motor unit on the base after all repairs and lubrication are completed. Place the unit on the base and push back against the spring contacts. Holding it in this position, put the three mounting screws in place. Tighten the two front screws and then back them off about one-fourth of a turn. Do not tighten the rear mounting screw until proper gear clearance has been accomplished.

(2) See section XIV, book 2, for requirements and adjustments of the main-shaft drive gear clearances.

d. PERFORATOR UNIT. (1) Replace the perforator unit onto the machine by hooking the space-out lever over the lower space-out lever guide post and insert the T-levers into their respective transfer levers.

(2) Insert the two perforator-bracket mounting screws on the top of the main frame and tighten.

(3) Rehook the punch-arm spring.

(4) Insert the punch-lever adjusting link into the hole on the punch hammer, and adjust to meet specifications as given in section XIV, book 2.

(5) Replace the tape reel by means of its two bracket mounting screws and its one bracket-arm mounting screw.

(6) Adjust the space-out lever to the proper place in its slot in the selector unit to meet requirements as outlined in section XIV, book 2.

e. REPLACING COVER. Place the cover back on the machine. Take care not to damage the equipment.

432. Emergency Repairs

a. GENERAL. Under *emergency conditions* normal requirements for new replacement parts may have to be set aside and any available parts, assemblies, or units used to restore service.

Note. USE LOCALLY-CONSTRUCTED OR TEMPORARILY-REPAIRED PARTS AND NONSTANDARD ITEMS OR ADJUSTMENTS TO RESTORE SERVICE *ONLY* UPON PROPER AUTHORITY AND REPLACE OR READJUST THEM AT THE EARLIEST POSSIBLE OPPORTUNITY.

b. CASTING REPAIRS. Frames of cast iron or steel may sometimes be repaired by brazing. Take great care in setting up broken castings for brazing especially when small errors in positioning cannot be corrected by adjustment.

c. STRIPPED THREADS. (1) When threads in parts have been stripped they can sometimes be repaired by using the next larger size tap that has the same number of threads per inch, and by using the next larger size screw. For example, a No. 6–32 thread that has been stripped can be retapped with a No. 8–32 tap, and a No. 8–32 screw used instead of the No. 6–32 screw.

(2) When the above method is not suitable, make repairs by drilling a clearance hole for the screw, and solder a steel hexagon nut over the hole on the side away from the screw.

d. REPAIRS BY SOLDERING. Solder may be used in joining any metals which can be tinned, such as copper, brass, or steel; but make the repairs in such a way that there is little strain on the solder. Both the sheet metal and the repaired part must be tinned, using an acid flux. When acid flux is used for tinning, clean the parts in hot water to remove the traces of acid left after soldering.

e. TEMPERED METAL PARTS. (1) Parts such as small springs, broken near the ends, may sometimes be used by turning up a new end loop with a pair of pliers.

(2) Large springs and tools that are broken near the ends can sometimes be heated and bent into shape. Certain tools can be heated, reformed, hardened, tempered, and resharpened to restore their usefulness.

433. Painting and Refinishing

a. When a touch-up job is required on the painted surfaces of the chests or reperforators, apply paint with a small brush. When numerous scars and scratches warrant complete repainting, remove the cover, panels, etc., and complete the work where there is no possibility of damaging the reperforator mechanism. Use dry-cleaning solvent (SD) to soften, and sandpaper to clean rust spots and corroded metal surfaces.

Caution: Don't use steel wool. Minute particles of steel wool frequently enter the case and cause harmful internal shorting or grounding of circuits.

b. Use only paint authorized and consistent with existing regulations in painting or refinishing the chests or reperforators.

c. Refer to section VIII, book 2, for information on moistureproofing and fungiproofing after repairs.

434. Instructions for Base Repairs

a. After all the necessary units have been removed from the reperforator base, remove the base plate by removing the four screws which fasten it to the reperforator base.

b. All parts and wiring are accessible for inspection. Clean them as instructed in preventive maintenance cleaning instructions, paragraph 39, and special cleaning instructions in paragraph 427.

c. Inspect the wiring carefully for damage at fasteners and where it passes through openings in the casting or other parts. When the insulation has been seriously damaged or softened by oil and grease, replace the entire length of wire. When several wires have been damaged, replace the entire harness. Use rubber and friction tape for temporary repairs.

d. Clean all contacts with cloth dampened with carbon tetrachloride. Burnish the contacts and reposition when necessary. Refer to section XIV, book 2, for instructions on spring tensions.

Note. Refer to section VIII, book 1, moistureproofing and fungiproofing instructions, and treat the bottom of this base before reassembling the base plate.

e. Reassemble the base plate to the reperforator base in the reverse order of the instructions for disassembly in *a* above.

f. Clean cords, plugs, and terminal block connections on the top of the base as described in section V, book 2, and replace any parts found on inspection to be seriously worn.

435. Instructions for Repair and Replacement of Cover

a. The repairs to the various parts of the cover are limited to cleaning as described in preventive maintenance instructions, paragraph 379, and straightening bent parts before refinishing as described in paragraph 432.

b. Replace any missing screws.

c. When a cover or door mounting screw is broken and cannot be replaced, drill a hole with a small drill and tap it to accommodate a new flathead screw. Countersink the hole for the head of the new screw.

d. Replace the padding and facing that has become frayed which might drop into the mechanism.

e. Replace broken lid stop arm and bracket.

436. Introduction to Nontyping Reperforator Unit Repairs

a. Instructions required for a major overhaul of the nontyping reperforator unit are grouped in the paragraphs immediately following this paragraph. The instructions are arranged by the principal assemblies and subassemblies of the nontyping reperforator unit for easy reference when repairs to a single item are necessary.

b. The various assemblies should be disassembled only to the extent necessary to complete the work involved. Complete disassembly of the nontyping reperforator unit is warranted only when the unit has been subjected to sand, grit, or some corrosive element.

437. Removing and Disassembling Reperforator Unit Subassemblies

a. RANGE-FINDER ASSEMBLY. (1) Remove the two screws that mount the range finder on the selector assembly. (See fig. 222).

(2) Remove the bell-crank screw; remove the bell crank. Remove the trip-latch screw, and remove trip latch and spring. Remove stop-lever screw locknut and stop-lever screw. Remove stop-lever spring and stop lever.

b. SELECTOR ASSEMBLY. (1) *Removal of selector armature.* Remove the armature spring. Loosen the armature pivot-screw locknut, and remove the pivot screw. Remove the armature carefully by moving the armature in the direction of removed pivot screw until armature is clear of opposite pivot and withdraw armature.

(2) *Removal of selector magnets.* Remove the two screws that mount the magnet bracket to the selector assembly and remove the magnet bracket. Disconnect the two line leads from the magnets. Pull the magnets on a straight line away from the side of the machine.

(3) *Removal of selector assembly.* Remove the lower space-out lever guide post. Remove the two screws that mount the selector assembly on the reperforator main frame. Carefully remove the selector assembly making certain that the T-levers and transfer levers are not damaged when they are disengaged. Pull the selector assembly directly away from the machine in line with the main shaft holding the clutch throw-out lever in a direction opposite to its spring pull. Handle the selector assembly with care. Don't damage the small parts.

(4) *Removal of selector levers, swords, and T-levers.* Remove the selector lever springs and the locking-lever spring. Remove the five nuts and washers that clamp separator plates together. Remove separator plates, swords, T-levers, selector levers, and locking lever.

c. REMOVAL OF THE TAPE-REEL ASSEMBLY. Remove the two tape-reel bracket mounting screws. Remove the tape-reel bracket arm mounting screw. Lift the tape-reel bracket assembly straight up from the machine.

d. REMOVAL OF PERFORATING ASSEMBLY. (1) Remove the tape space-out lever from its lower guide post.

(2) Remove punch-arm adjusting link by backing off adjusting nut as far as it will go.

(3) Remove the punch-arm spring.

(4) Remove the two perforator assembly bracket mounting screws.

(5) Remove the perforator assembly by lifting straight up from the base. Take care not to damage the T-levers or transfer levers when they disengage.

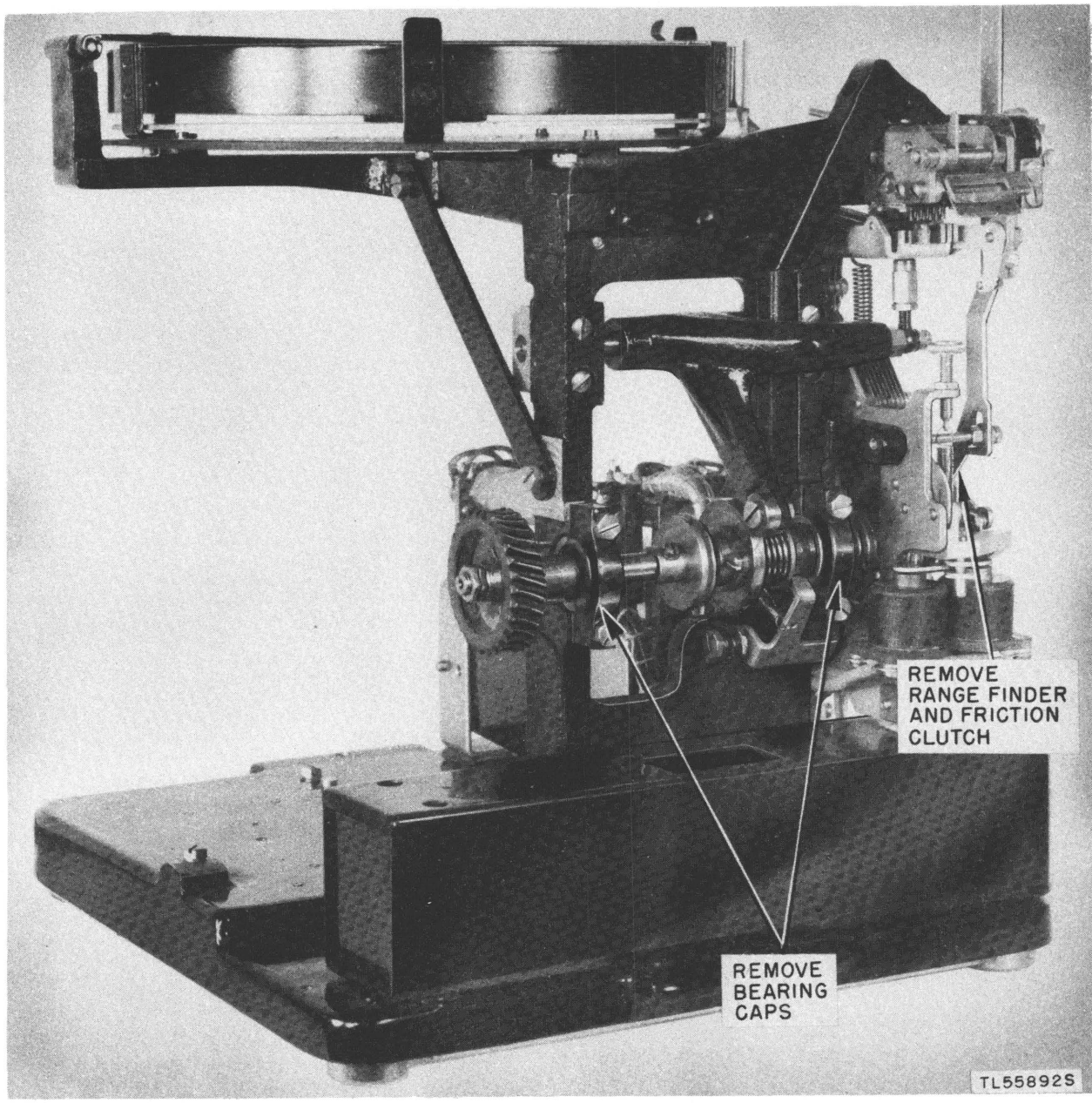

Figure 233. Removal of main shaft.

438. Reassembling Nontyping Reperforator Unit Subassemblies

a. In general all parts are reassembled in the reverse order in which they are disassembled. If the parts have been cleaned and the surfaces are free from oil, relubricate them as they are reassembled. Give particular attention to all parts which are not easily accessible after the reassembling is completed.

b. Any adjustments which have been altered in the process of disassembling, cleaning, repair, replacement, or reassembly of the parts must be completely readjusted according to the related instructions in section XIV, book 2.

439. Removing and Inspecting Main Shaft

a. GENERAL. Most repairs to the main-shaft parts are made by replacing the part. Main-shaft parts between the main-bearing locknuts and the nearest shaft end can be replaced without removing the main shaft from the reperforator unit. (See fig. 233.) If the main shaft must

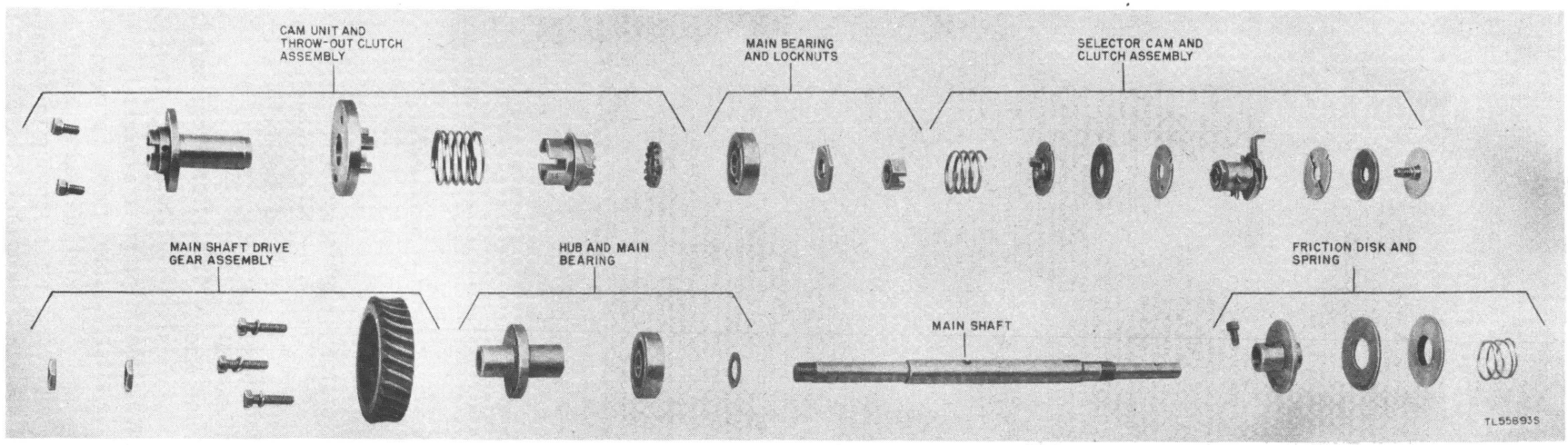

Figure 234. Main-shaft parts in sequence of removal.

be removed to get at the part that must be serviced or replaced, completely disassemble, clean, inspect, and lubricate the shaft before assembling it.

b. REMOVAL OF MAIN SHAFT FROM REPERFORATOR. Remove the three screws that mount the motor to the base and move the motor aside.

(1) Remove the two screws that mount the range finder on the selector assembly and remove the range finder. (See fig. 233.)

(2) Remove the outer selector-cam friction-clutch plate, by turning the plate clockwise with a large screw driver, and remove selector cam.

(3) Remove the two mounting screws on the chad chute, and remove the chute.

(4) Remove the four screws that hold the main bearing caps in place.

(5) Hold the punch lever up and away from its cam, and remove the main shaft.

c. REMOVAL OF MAIN-SHAFT PARTS (fig. 234). (1) *Removal of the selector cam.* The selector cam may be removed from the main shaft without removing the shaft from the reperforator. See *b* (2) and (3) above.

(2) *Removal of punch-arm cam.* After removing the selector-cam sleeve, remove the inner selector-cam friction clutch and the selector-unit friction spring. Grasp main-shaft drive gear in one hand and remove the upper main-shaft bearing locknuts (2) by turning clockwise from the selector-cam end. Remove the upper main-shaft bearing, the main-shaft clutch, the main-shaft clutch spring, then remove the punch-arm cam. Remove punch-arm cam friction-clutch spring and punch-arm cam friction-clutch friction washers and plates.

(3) *Removal of the main-shaft drive gear.* The main-shaft drive gear may be removed from the main shaft without removing the shaft from the reperforator. Remove the three mounting screws in the fiber gear and slip the gear off the lower end of the main shaft.

(4) *Removal of the lower main-shaft bearing.* Remove the two locknuts on the lower end of the main shaft turning them counterclockwise. Remove the main gear; then remove the lower main-shaft bearing.

440. Repairing and Replacing Main Shaft

a. INSPECTION AND REPAIR PROCEDURE. (1) *Gummy friction washers.* Gummy friction washers can usually be cleaned in dry-cleaning solvent (SD). Thoroughly dry and lubricate the washers with oil before reassembly. Replace any washers that have a hardened surface or have lost their absorbent qualities.

(2) *Selector-cam unit.* When the selector cams become worn so that the requirements and adjustments of the selector mechanism given in section XIV, book 2, cannot be met because the points of the selector cam are worn, replace the selector cam with a new unit.

(3) *Drive gear.* Replace the main-shaft drive gear when it becomes badly worn or when the proper clearance cannot be obtained by adjustment. (See par. 459.) Replace the gear if any of the teeth are missing. If the new gear is supplied without the hub, disasemble the old gear unit by removing the three hub mounting screws and lockwashers and mount the new gear on the old hub.

b. REPLACING MAIN SHAFT. (1) Remove the motor unit from the base. The main shaft can be replaced with the selector unit in place but the range-finder assembly must be removed as described in paragraph 427.

(2) Remove the selector cam and preceding components from the main shaft if they are not already removed and slide main shaft in place.

(3) Move the punch-arm lever and the clutch throw-out lever until the main shaft will slide past and into place.

(4) Place the bearing caps on the main bearings and tighten screws just enough to prevent the shaft from shifting.

(5) Place the selector cam and associated parts on the end of the shaft.

(6) Replace the punch-arm adjusting link into the slot on the punch arm and adjust the link to specifications given in paragraph 464.

(7) Replace the motor unit, tightening the three screws holding it to the reperforator unit base. Make certain that the friction-clutch plates face in the right direction and that the selector-cam ends fit into the slots of the driven-clutch plates. After the driving-clutch plate on the end of the shaft has been tightened, check to see if the selector cam can be turned by hand. Cam should turn without difficulty.

(8) Refer to related paragraphs in section XIV, book 2, for complete instructions on the adjustment of the main shaft and range finder which must be completed before the reperforator can be operated.

Section XIV. REQUIREMENTS AND ADJUSTMENTS

441. Introduction to Test Requirements and Adjustment Procedures

a. GENERAL. The data in this section includes all test requirements and adjustments for nontyping reperforators. The information is arranged in the sequence that will normally be followed when a test and adjustment of a complete nontyping reperforator is undertaken.

b. INDEX. When a complete test and adjustment is not involved, refer to the index to locate the desired information.

***Caution*:** ALWAYS REMEMBER THAT A CHANGE IN ANY ONE ADJUSTMENT REQUIRES THE CHECKING OF ALL RELATED ADJUSTMENTS.

442. Details of Requirements and Procedures

The information in each paragraph is arranged under three headings: preparation, requirements, and adjustments.

a. PREPARATION. Necessary instructions for arranging the unit for testing or adjusting are furnished under this heading.

b. REQUIREMENTS. Measurements, spring tensions, settings, etc., that have been found to give the best results are furnished under this heading. Some requirements have a very small working margin and others have a large working margin. Owing to slight differences in various machines of the same model, some reperforators function much better when clearances are adjusted to minimum values recommended, and other reperforators give better results with clearances adjusted to maximum values. The same is true for spring tensions, air gaps, etc. Therefore the requirements given in this manual for clearances, spring tensions, etc., should be applied as necessary to give the best results and operation.

c. ADJUSTMENTS. Each adjustment is described in text and, for emphasis, is often indicated in the illustrations. The adjustments vary in nature, including replacing an old spring with a new one, bending a leaf spring with a spring bender, repositioning an eccentric screw, inserting shims between parts, etc. As a starting point when making adjustments set the clearances etc., midway between the minimum and maximum values until it can be determined if more critical adjustments are required.

443. Preparation for Checking and Adjusting

a. GENERAL. Reperforator adjustments are made on the basis of various units and assemblies. To facilitate checking and adjusting, it is necessary to remove some of the units and assemblies or to set up certain functions.

b. REMOVING AND REPLACING ASSEMBLIES AND UNITS FROM ASSOCIATED EQUIPMENT. Refer to disassembly and reassembly information in section XIII, book 2, for detailed information when required.

c. SETTING UP A CERTAIN CHARACTER OR FUNCTION. When the preparation for any adjustment specifies setting up a certain character or function, use the following method: Rotate the motor fan or governor counterclockwise, as viewed from the fan or governor end, until the locking lever is about to drop off the long, high part of the locking cam. Move the armature extension (if the unit is equipped with a pulling magnet selector) or the selector arm (if the unit is equipped with a holding magnet selector) to the operated (marking) or unoperated (spacing) side in accordance with the first selecting impulse of the code combination to be set up. Refer to code chart. (See fig. 21.) Hold the armature extension or the selector-arm extension in this position, and again rotate the motor fan or governor until the top (No. 1) selector sword has been positioned and the locking lever is on a peak of the locking cam. Position the armature extension or the selector-arm extension in accordance with the second impulse of the code combination to be set up and repeat the procedure followed in positioning the top (No. 1) selector sword. Position all of the selector swords following the foregoing procedure. When all swords have been positioned and the main clutch has been engaged, further rotation of the motor fan or governor will cause the unit to select the character or to perform the function which has been set up.

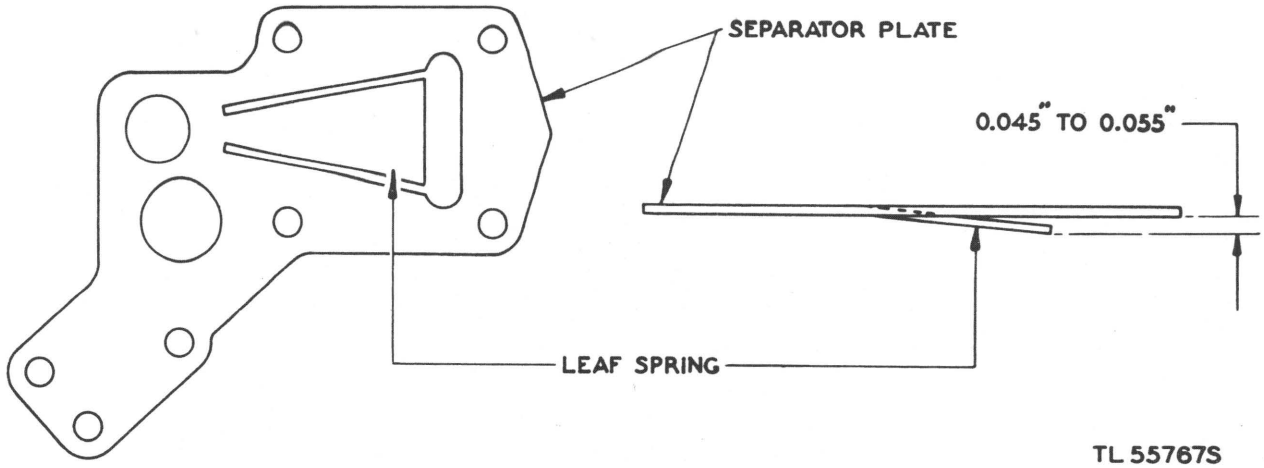

Figure 235. Selector separator-plate requirements.

d. SPRING TENSION. Spring-tension values given in this manual were derived from measurements made with teletype spring scales which are calibrated for use in a vertical pull position. When the scales are used in any other position the reading is an indicated value. To get the proper spring-value readings, use spring scales as shown in the illustrations included in tool equipment TE–50.

e. FIXED PIVOTS. Solid black circles on illustrations indicate fixed pivots.

444. Selector Separator-Plate Adjustment (fig. 235)

Note. This adjustment is to be checked only if the selector mechanism is disassembled.

a. PREPARATION. None required.

b. REQUIREMENTS. The leaf springs of the separator plates should exert a light pressure upon the swords.

c. ADJUSTMENT. Remove the separator plates, bend the leaf springs at the narrow portions so that the ends will be from 0.045 inch to 0.055 inch below the under surface of the straight portions.

445. Main-Shaft Adjustment

a. PREPARATION. Set the reperforator on its back.

b. REQUIREMENTS. When the main shaft is rotated, the selector cams on the selector-cam sleeve should line up with their respective selector levers.

c. ADJUSTMENT. Loosen the four screws that hold the main-shaft bearing brackets, set the position of the main shaft, and retighten the four screws that hold the main-shaft bearing brackets.

446. Selector-Lever Spring Tension Adjustment (fig. 239)

a. PREPARATION. Rotate the main shaft until the selector-cam sleeve is in its stopped position. With the transfer levers in the spacing position, hook an 8-ounce scale over the top of each transfer lever as it is tested and pull horizontally to the right.

b. REQUIREMENTS. It should require from 1½ to 3 ounces to move each lever to the marking position. The levers should start back at not less than 1½ ounce.

c. ADJUSTMENTS. If requirement is not met, replace with a new spring.

447. Selector-Armature Adjustment (fig. 237)

a. PREPARATION. Unhook the locking lever spring from the locking lever.

b. REQUIREMENTS. The armature should be free on its pivot screws, with barely perceptible end play. There should be some clearance, but not more than 0.008 inch, between the inner surface of the armature locking wedge and the No. 5 sword, under the following conditions: when the No. 5 selector lever is resting on the peak of its cam; when the No. 5 sword is held against the outer separator plate without bending the latter; when the armature end play is taken up in a direction to reduce the specified clearance to a minimum; and when the locking lever spring is removed.

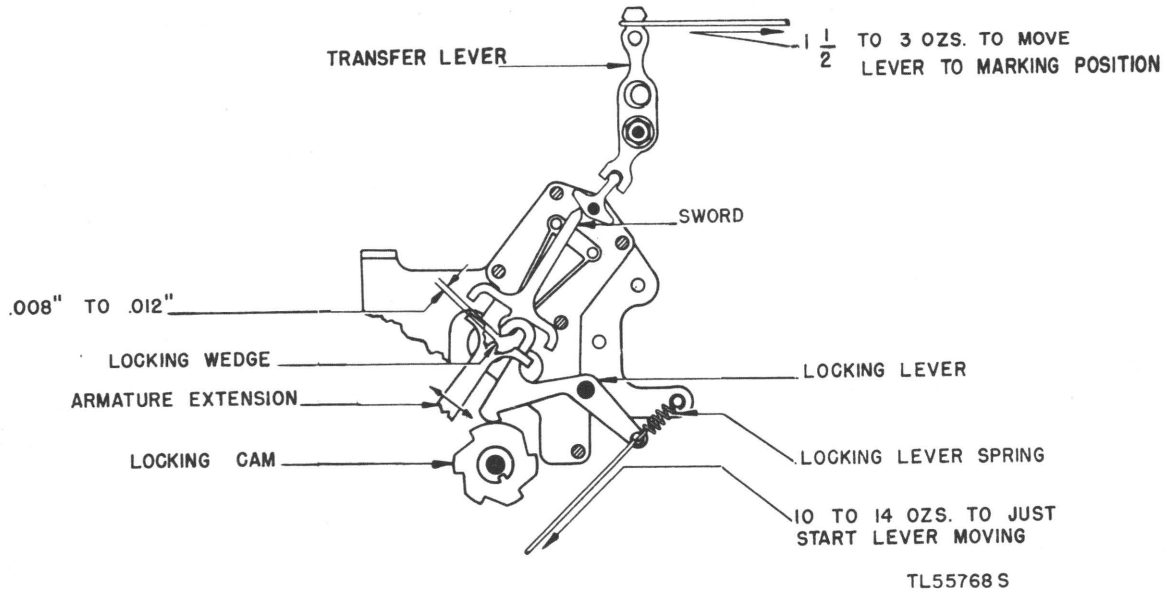

Figure 236. Selector-lever spring tension requirements.

c. ADJUSTMENTS. If there is no clearance between the armature locking wedge and the No. 5 sword, loosen the locknut on the outer pivot screw and adjust to obtain the clearance, noting that a quarter-turn of the screw is equivalent to approximately 0.006 inch. Remove the armature bracket and adjust the inner pivot screw to obtain the proper armature end play. Replace the armature bracket. If there is more than 0.008-inch clearance, remove the armature bracket and adjust the inner pivot screw. Replace the bracket and adjust the armature end play by means of the outer pivot screw. Rehook the armature-detent spring to the armature detent.

448. Selector-Armature Bracket Link Adjustment (figs. 238 and 239)

a. PREPARATION. Remove the range-finder assembly. Unhook the locking-lever spring, loosen the magnet-bracket mounting screws, and move the bracket to its lowest position. Loosen the armature-bracket mounting screws, the guide-post locknut, and back off the armature stops. Move the bracket eccentric out of the way. Rotate the main shaft until the No. 5 selector lever rests on the peak of its cam.

b. REQUIREMENTS. The position of the armature bracket should be such that a line through the center of the No. 5 sword extends approximately through the center of the armature pivot screw when the swords are held midway between the stop posts by means of the No. 72581 gauge pins.

c. ADJUSTMENT. Hold the swords in a position midway between the two stop posts by means of the No. 72581 gauge pins inserted between the stop posts and the swords. Be sure that both the armature extension arms are between the arms of the swords. With the swords held in this position, place the No. 73370 locating gauge over the ends of the No. 5 sword so that the two legs of the gauge are against the ends of the two sword arms. Move the bracket to a position where both the armature extension arms are against the flat surface between the legs of the gauge. Hold the bracket in this position and tighten the guide-post locknut. Remove the locating gauge and the two gauge pins.

449. Selector-Armature Bracket Adjustment (fig. 239)

a. PREPARATION. Remove the range-finder assembly.

b. REQUIREMENTS. The position of the armature bracket should be such as to provide some clearance, but not more than 0.040 inch, between each sword and either stop post under the following conditions: rotate the main shaft

until the No. 5 selector lever is resting on the peak of its cam. With the armature in its unoperated (spacing) position, moving the spacing arm of the No. 5 sword against the armature extension. Then rotate the armature slowly toward the marking position until the armature just leaves the spacing arm of the No. 5 sword. Check the clearance between the No. 5 sword and the spacing stop post. Unhook the armature spring at its adjusting screw and with the selector armature in its operated (marking) position, move the marking arm of the No. 5 sword against the selector-armature extension. Then rotate the armature slowly toward the spacing position until the armature just leaves the marking arm of the No. 5 sword. Check the clearance between the No. 5 sword and the marking stop post. With each selector lever on the peak of its cam, each associated sword should be tried for the foregoing requirement of some clearance, but not more than 0.040 inch, between each sword and stop posts.

c. ADJUSTMENTS. Tighten the armature-bracket mounting screws just enough so that the bracket may be moved by tapping it lightly. By rotating the bracket on its pivot, the clearance between the swords and the stop posts may be regulated. If this clearance is more than 0.040 inch, move the bracket in a direction to bring the armature toward the sword. If there is no clearance, move the bracket in the opposite direction to bring the armature away from the sword. After the bracket is set and both screws are tightened move the eccentric stop against the bracket and tighten its screw. The eccentric and link will, therefore, determine the position of the bracket. The bracket may be removed by simply removing the two bracket screws. In replacing, hold the bracket against the eccentric stop, while tightening the two bracket screws. Replace the armature spring.

450. Armature Stop Adjustment (figs. 239 and 240)

a. PREPARATION. Remove the range-finder assembly.

b. REQUIREMENTS. The No. 5 sword arms (spacing and marking) should clear their associated arms on the selector armature extension by from 0.040 inch to 0.042 inch when the engaging face of an opposite sword arm is against the engaging face of its armature extension arm and the No. 5 selector lever is on the high part of its cam.

c. ADJUSTMENT. To adjust the clearance between the side of the marking extension of the armature and the marking arm of the sword, reposition the armature stop screw with the armature in its unoperated position. To adjust the clearance between the spacing extension of the armature and the spacing arm of the sword, reposition the armature stop nut with the armature in the operated position. If necessary, pinch the nut to make it tight on its screw. Recheck the clearance between the marking extension of the armature and marking arm of the sword. Replace the locking-lever spring.

451. Armature Locking-Wedge Adjustment (fig. 236)

a. PREPARATION. None required.

b. REQUIREMENTS. There should be from

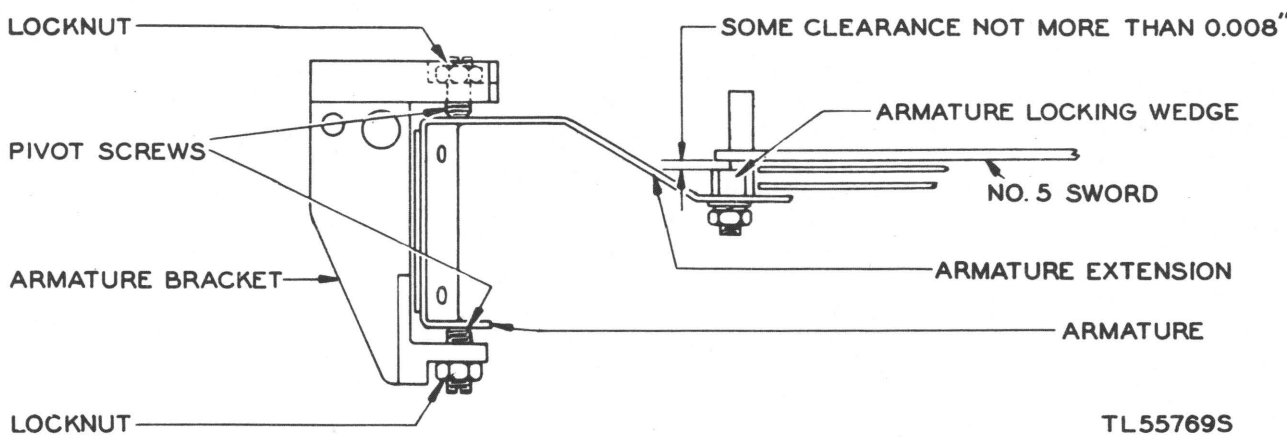

Figure 237. Selector-armature requirements.

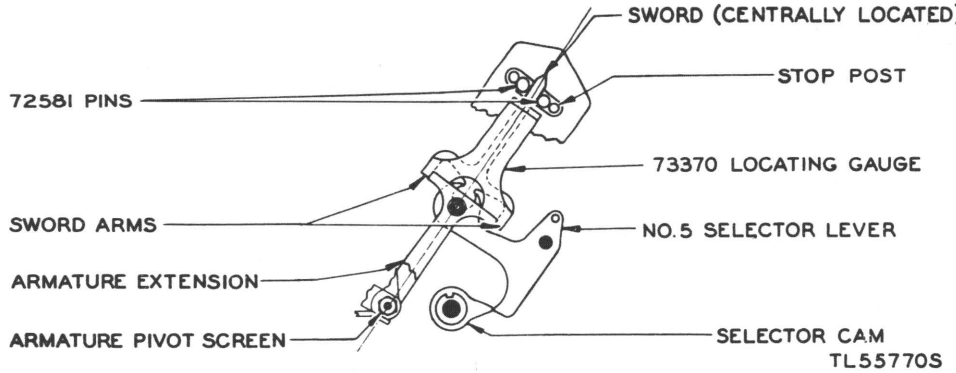

Figure 238. Selector-armature bracket link requirements.

0.008-inch to 0.012-inch clearance between the point of the armature locking wedge and the point of the locking lever when the locking lever is on the long, high part of the locking cam and the two points are in line.

c. ADJUSTMENT. Move the locking wedge forward or backward in its slot in the armature extension by means of the locking-wedge locknut.

452. Armature Locking-Lever Spring Tension Adjustment (fig. 236)

a. PREPARATION. Move the locking lever to the high part of the locking cam, hook a 32-ounce scale in the spring hole of the locking lever and pull in line with the spring under the magnet bracket.

b. REQUIREMENTS. It should require from 10 to 14 ounces to start the lever moving.

c. ADJUSTMENT. If the requirement is not met, replace with a new spring.

453. Stop-Lever Eccentric Screw Adjustment (fig. 241)

a. PREPARATION. Remove the range-finder assembly.

b. REQUIREMENTS. The stop lever on the range-finder assembly should overtravel the latching surface of the trip latch by from 0.004 inch to 0.006 inch.

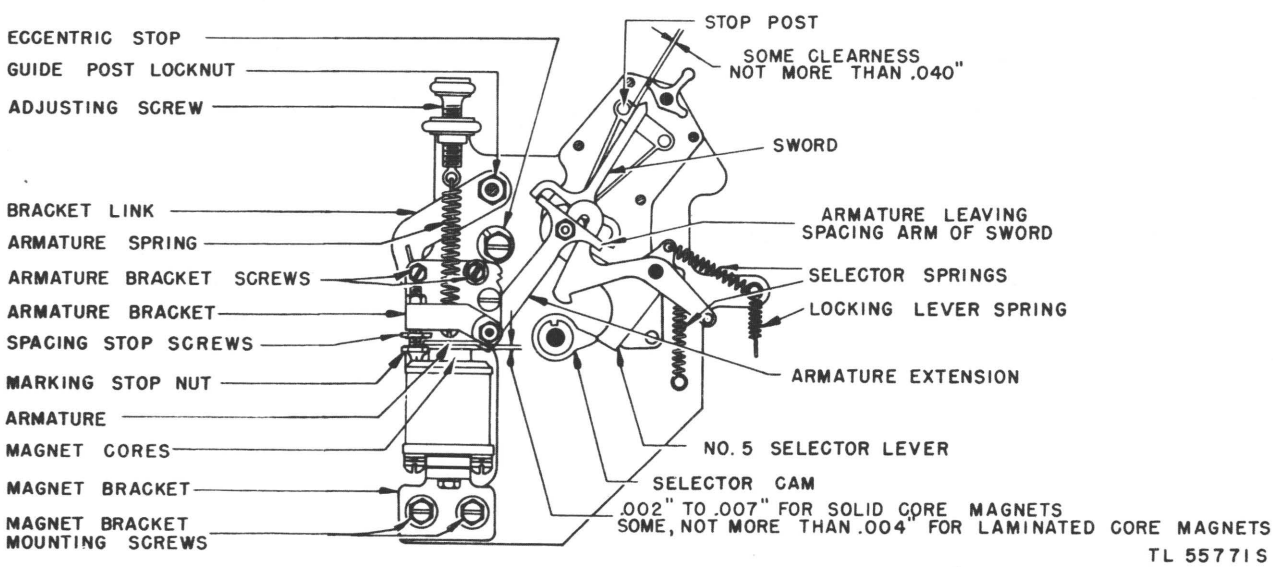

Figure 239. Selector-armature bracket requirements.

c. ADJUSTMENT. Adjust the stop-lever eccentric screw to obtain this overtravel. Be sure that the tightening of the eccentric-screw nut does not disturb the adjustment.

454. Stop-Lever Spring Tension Adjustment (fig. 242)

a. PREPARATION. Remove the range-finder assembly. Hold the trip-latch plunger operated and hook an 8-ounce scale at the end of the stop lever on the range-finder assembly.

b. REQUIREMENTS. It should require from ¾ to 1¼ ounces to start the lever moving.

c. ADJUSTMENT. If this requirement is not met, replace with a new spring.

Note. Be sure that the stop-lever eccentric has been adjusted before taking this reading.

455. Trip-Latch Spring Compression Adjustment (fig. 241)

a. PREPARATION. Remove the range-finder assembly. Hold the range-finder assembly in a horizontal position and apply an 8-ounce scale, held vertically, to the step of the trip latch.

b. REQUIREMENTS. It should require from 1 to 1½ ounces when pushing upward to start the trip latch moving.

c. ADJUSTMENT. If the requirement is not met, replace with a new spring. Replace the range-finder assembly, taking care that the trip-latch plunger does not jam against the armature trip-off eccentric screw when remounting.

456. Armature Trip-off Eccentric-Screw Adjustment (fig. 243)

a. PREPARATION. Rotate the main shaft until the stopping edge of the stop lever is directly opposite the latching surface of the trip latch.

b. REQUIREMENTS. When the armature is in the unoperated position there should be some clearance, but not more than 0.002 inch, between the stop lever and the trip latch. The trip-latch plunger should have at least 0.002-inch end play when the armature is held against

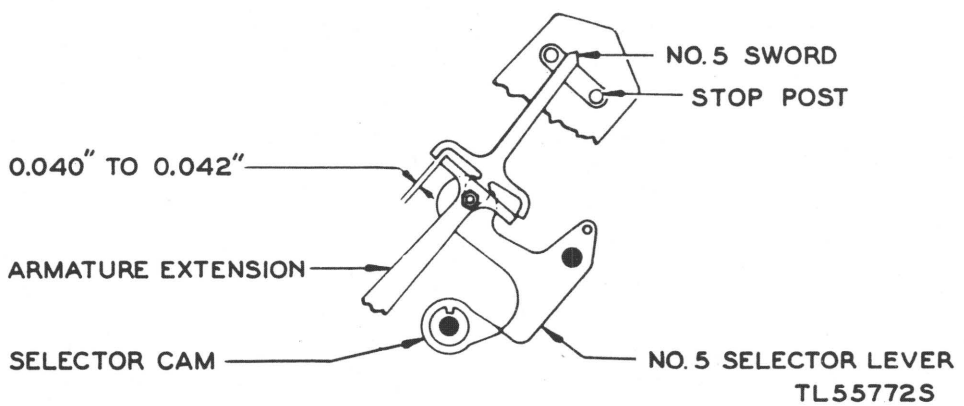

Figure 240. Armature stop requirements.

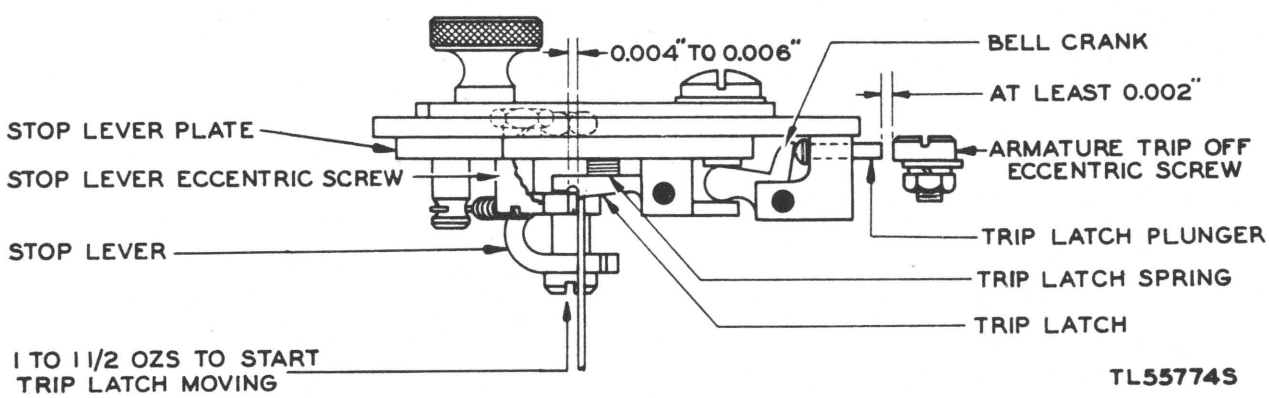

Figure 241. Stop-lever eccentric screw requirements.

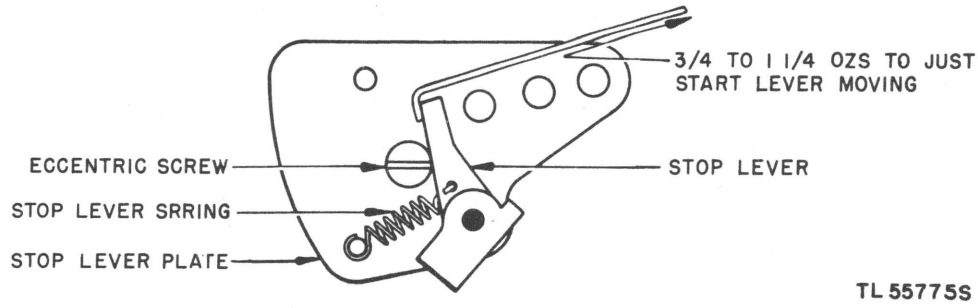

Figure 242. Stop-lever spring tension requirements.

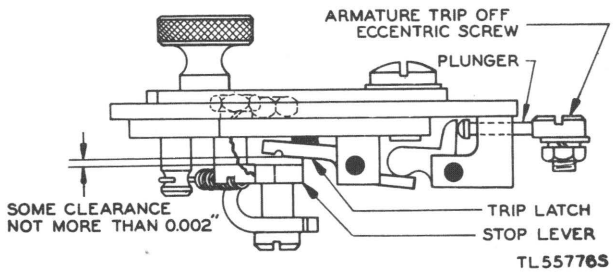

Figure 243. Armature trip-off eccentric-screw requirements.

the marking stop and with the stop lever clear of the latching surface of the trip latch.

c. ADJUSTMENT. Obtain these requirements by means of the armature trip-off eccentric screw.

457. Magnet Bracket Adjustment (fig. 239)

a. PREPARATION. None required.

b. REQUIREMENTS. There should be from 0.002-inch to 0.007-inch space between each magnet core and the armature antifreeze strip for solid core magnets and some, not more than 0.004 inch, for laminated core magnets when the armature is against the operated stop (marking stop). The sides of the solid magnet cores should aline with the edge of the armature. The ends of the cores of both style magnets should be parallel to the face of the armature.

c. ADJUSTMENT. Adjust by means of the magnet-bracket mounting screws.

458. Magnet-Coils Adjustment

a. PREPARATION. None required.

b. REQUIREMENTS. The front edge of the solid magnet core of the front magnet coil should aline within 1/64 inch of the front edge of the armature.

c. ADJUSTMENT. Adjust by means of the magnet-coil mounting screws.

459. Motor-Unit Adjustment

a. PREPARATION. None required.

b. REQUIREMENTS. There should be a minimum backlash without binding between the motor pinion and the main-shaft gear. Check this backlash for one complete revolution of the main-shaft gear.

c. ADJUSTMENT. Loosen the three mounting screws and position the motor unit by means of the adjusting screw (located to the left of the right-hand motor mounting screw).

460. Main-Shaft Clutch Throw-Out Lever Adjustment (fig. 244)

a. PREPARATION. None required.

b. REQUIREMENTS. The clutch teeth should be separated by from 0.010 inch to 0.020 inch when totally disengaged.

c. ADJUSTMENT. Adjust the clutch throw-out lever by means of its pivot screws. After the clearance is obtained, the clutch throw-out lever should be free in its bearings with no perceptible end play.

461. Selector-Clutch Torque Adjustment (fig. 245-B)

a. PREPARATION. Start the motor and let it run for at least 10 minutes. Hook a 32-ounce scale to the selector-cam sleeve stop arm. Pull at right angles to the stop arm.

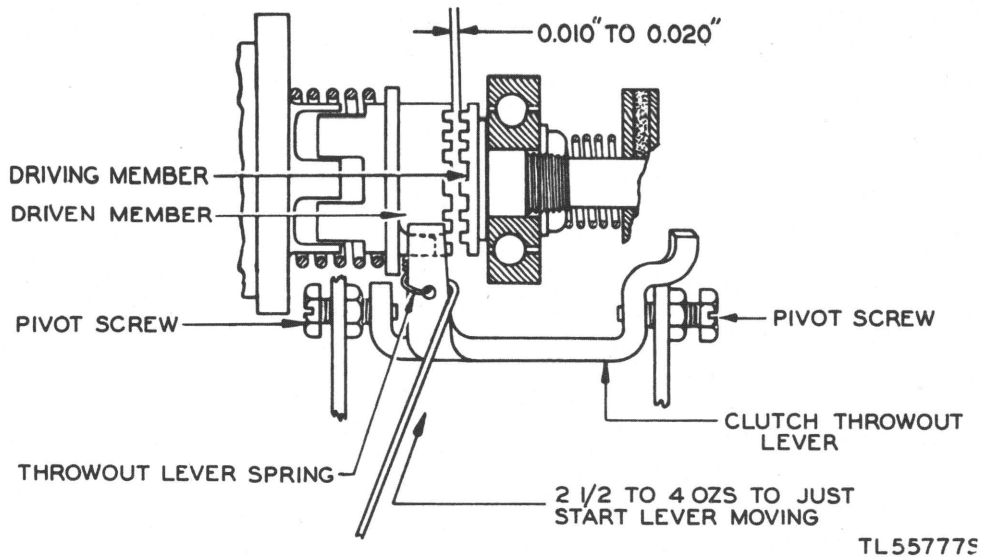

Figure 244. Main-shaft clutch throw-out lever requirements.

b. REQUIREMENTS. It should require a pull of from 14 to 18 ounces to hold the sleeve stationary.

c. ADJUSTMENT. Replace felt friction washers.

462. Clutch Throw-Out Lever Spring Tension Adjustment (fig. 244)

a. PREPARATION. Move the clutch throw-out lever to the low part of its cam. Hook an 8-ounce scale to the clutch throw-out lever at the spring hole and pull at right angles.

b. REQUIREMENTS. It should require from 2½ to 4 ounces to start the lever moving.

c. ADJUSTMENT. If the requirement is not met, replace with a new spring.

463. Main-Shaft Friction-Clutch Torque Adjustment (fig. 245-A)

a. PREPARATION. Run the motor for at least 10 minutes, energize the magnets, hook a 32-ounce scale over the top screw on the cam, pull at right angles to a line drawn through the center of the two cam mounting screws. Hold the punch arm away from its cam.

b. REQUIREMENTS. It should require from 6

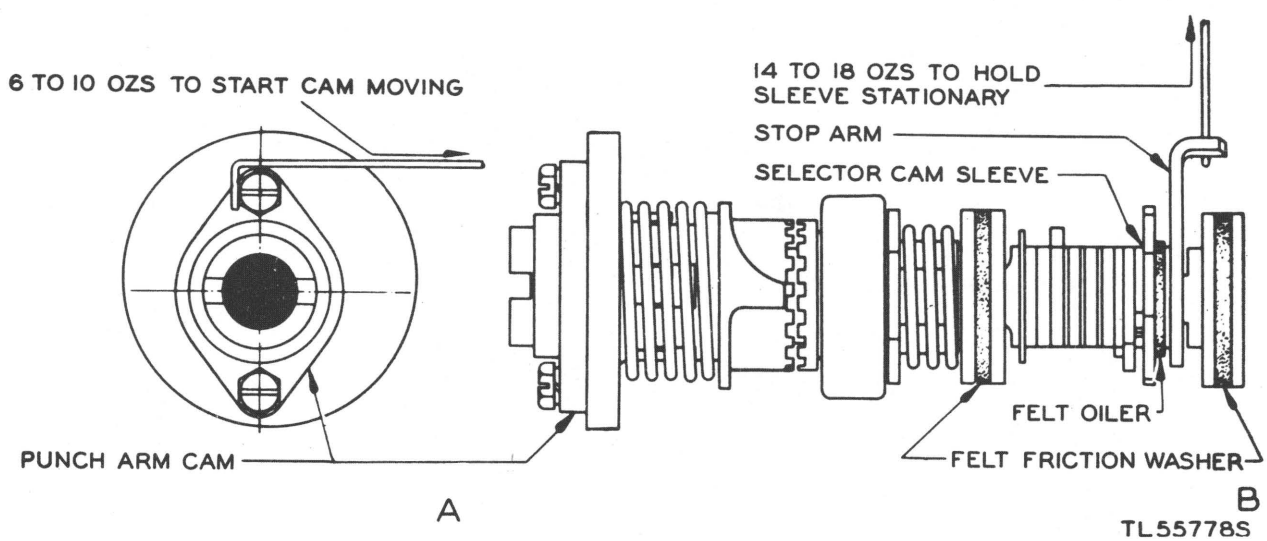

Figure 245. Selector-clutch torque requirements.

to 10 ounces to start the cam moving from its normal position.

c. ADJUSTMENT. Replace felt friction washers.

464. Punch-Arm Shaft Adjustment

a. PREPARATION. None required.

b. REQUIREMENTS. (1) With the punch arm held against the front bearing block, the end of the shaft should be flush with the front of the bearing block.

(2) The punch-arm shaft should be free to turn with minimum end play.

c. ADJUSTMENTS. (1) Remove the punch-hammer spring and adjust the position of the punch-arm on the shaft by means of the punch-arm setscrew.

(2) Position the collar at the rear bearing bracket by means of the collar setscrews. Replace the punch-hammer spring.

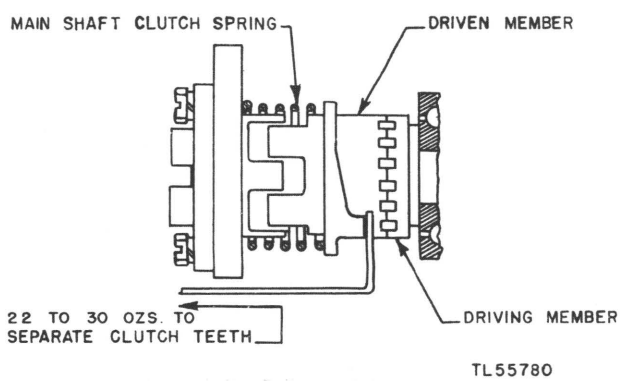

Figure 246. Main-shaft clutch spring tension requirements.

465. Main-Shaft Clutch Spring Tension Adjustment (fig. 246)

a. PREPARATION. Remove the large chad chute. Hook a 32-ounce scale over the throw-out cam on the driven member.

b. REQUIREMENTS. With the clutch driven-member teeth resting against the driving-member teeth, but not engaged, it should require from 22 to 30 ounces to separate the teeth when the pull is applied as nearly in line with the shaft as possible.

c. ADJUSTMENT. If requirement is not met replace with a new spring. Replace the chad chute.

466. Transfer-Lever Position Adjustment (fig. 247)

a. PREPARATION. None required.

b. REQUIREMENTS. (1) With the No. 4 transfer lever in the spacing position and the No. 5 transfer lever in the marking position and the selector-cam sleeve in the stop position, the clearance between the engaging surfaces of the No. 5 sword and the armature extension, with the armature in the spacing position A, should be the same within 0.005 inch as the clearance between the No. 4 sword and the armature extension, with armature in marking position B.

(2) The transfer levers should be positioned so that they line up with the selector T-levers.

c. ADJUSTMENTS. (1) Loosen the two screws holding the punch-unit bracket to the frame, and adjust its position using the rear screw as a pivot.

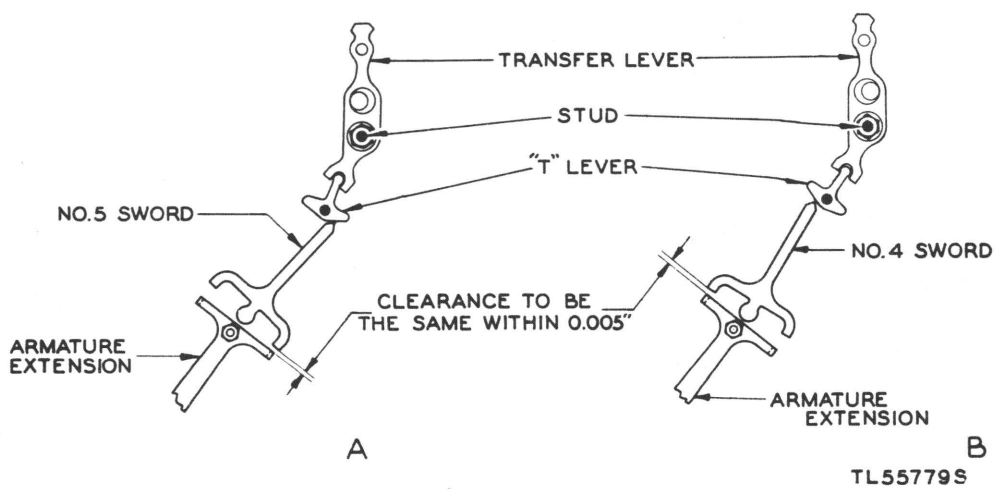

Figure 247. Transfer-lever position requirements.

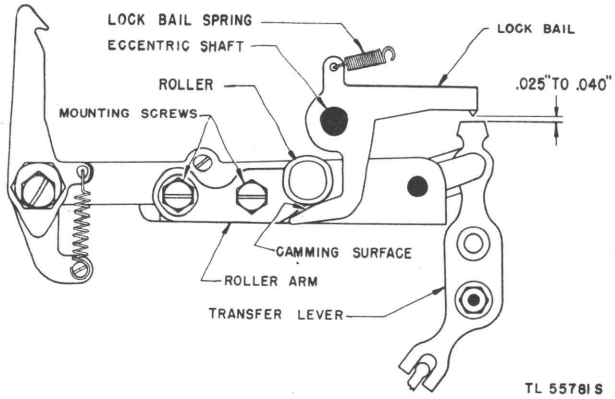

Figure 248. Roller-arm position requirements.

(2) Adjust by means of the transfer-lever stud locknut.

467. Punch-Hammer Adjusting-Nut Adjustment

a. PREPARATION. None required.

b. REQUIREMENTS. The punch-hammer adjusting nut (fig. 252) should be adjusted so that the punches are driven through the tape sufficiently to punch clearly.

c. ADJUSTMENT. Place a piece of tape in the die. Back off the punch-hammer adjusting nut so that when main shaft is rotated with the LETTERS signal set up on the selectors, the punches will fail to punch holes in the tape. Adjust the adjusting nut, by advancing slowly until all the holes are just punched cleanly in the tape; then advance the adjusting nut an additional quarter-turn and tighten locknut.

468. Lock-Bail Position Adjustment (fig. 248)

a. PREPARATION. Set up the Y combination and rotate the main shaft until the punch hammer is in its extreme upward position.

b. REQUIREMENTS. The edge of the lock-bail should be firmly seated between at least two transfer levers, one in the marking position and one in the spacing position.

c. ADJUSTMENT. Position the lock-bail by means of the eccentric shaft, using the upper semicircle of the adjustment only.

469. Roller-Arm Position Adjustment (fig. 248)

a. PREPARATION. With the main shaft in its stopped position, hold the transfer levers in the center of their travel.

b. REQUIREMENTS. There should be a clearance of from 0.025 inch to 0.040 inch between the top of any transfer lever and the edge of the lock-bail.

c. ADJUSTMENT. Adjust the position of the roller arm by means of its mounting screws.

470. Lock-Bail Spring Tension Adjustment (fig. 248)

a. PREPARATION. Move the selector-cam sleeve to its stop position. Hook a 32-ounce scale at the center of the locking edge of the bail and pull upwards.

b. REQUIREMENTS. It should require from 6 to 10 ounces to start the bail moving.

c. ADJUSTMENT. If requirement is not met, replace with a new spring.

471. Punch-Hammer Pivot-Screws Adjustment

a. PREPARATION. Move the punch-hammer to its lower (unoperated) position.

b. REQUIREMENTS. The punch levers should line up with their respective punch-block tape pins, and the punch-hammer should have some end play, but not more than 0.004 inch.

c. ADJUSTMENT. Adjust the punch-hammer pivot screws.

472. Feed-Roll End-Play Adjustment

a. PREPARATION. None required.

b. REQUIREMENTS. The feed roll should have some end play, but not more than 0.004-inch.

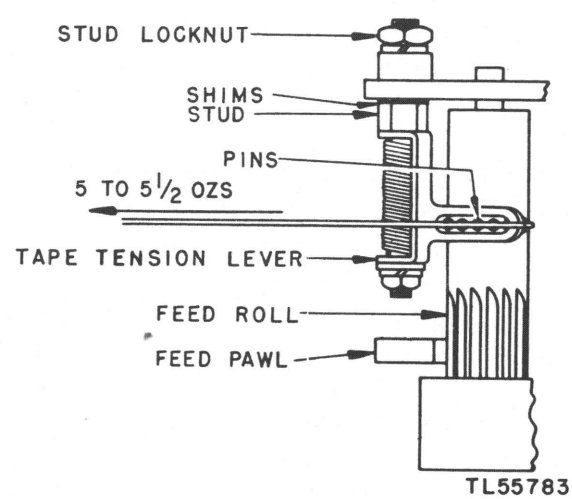

Figure 249. Tape-tension lever stud requirements.

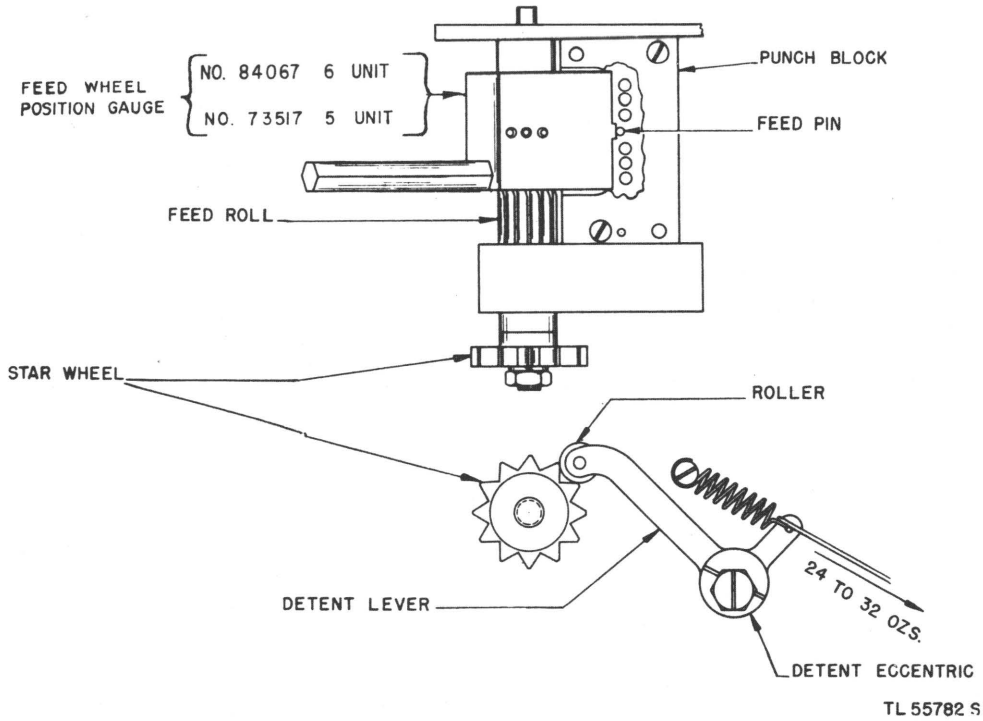

Figure 250. Tape-feed roll detent spring tension requirements.

c. ADJUSTMENT. Add or remove shims between the feed-roll bearing plate and the punch block.

473. Tape-Feed Roll Bearing Plate Adjustment

a. PREPARATION. Hold the feed pawl, tape-tension lever, and the feed-roll detent lever away from the feed roll.

b. REQUIREMENTS. The feed role should be free to turn without any tendency to bind.

c. ADJUSTMENT. Position the feed-role bearing plate by means of its mounting screws.

474. Tape-Tension Lever Stud Adjustment (fig. 249)

a. PREPARATION. None required.

b. REQUIREMENTS. The sides of the slot in the tape-tension lever should not touch the pins on the tape-feed roll when the play in both the feed roll and the tape-tension lever is taken up in opposite directions.

c. ADJUSTMENT. Position the tape-tension lever stud by means of shims between the stud and the mounting bracket.

475. Tape-Feed Roll Detent Spring Tension Adjustment (fig. 250)

a. PREPARATION. Hook a 32-ounce scale over the end of the detent lever as close to the spring hole as possible, and pull in line with the spring.

b. REQUIREMENTS. It should require from 24 to 32 ounces to start the roller moving away from the star wheel.

c. ADJUSTMENT. If requirement is not met, replace with a new spring.

476. Tape-Stripper Plate Adjustment

a. PREPARATION. None required.

b. REQUIREMENTS. There should be some clearance, but not more than 0.010-inch, between the upper edge of the tape-stripper plate and the feed roll. Try one complete revolution of the feed roll.

c. ADJUSTMENT. Adjust the tape-stripper plate by means of its mounting screws.

477. Tape-Tension Lever Spring Tension Adjustment (fig. 249)

a. PREPARATION. Hook an 8-ounce scale over the end of the tape-tension lever and pull at right angles.

b. REQUIREMENTS. It should require a tension of from 5 to 5½ ounces to start the lever moving.

c. ADJUSTMENT. Loosen the tape-tension lever stud locknut, and adjust the stud by rotating it (clockwise to increase tension). Tighten the stud locknut.

478. Tape-Feed Roll Detent Preliminary Adjustment (fig. 250)

a. PREPARATION. Move the punch-arm roller to a high part of its cam, insert the feed-roll position gauge (No. 73517) into the punch block so that the projection of the gage stops against the punch-block feed pin.

b. REQUIREMENTS. A pin of the feed roll should line up with the center hole on the gage.

c. ADJUSTMENT. Adjust the position of feed roll by means of feed-roll detent eccentric.

479. Tape-Feed Pawl Eccentric Adjustment (fig. 251)

a. PREPARATION. Rotate the main-shaft until the selected punch-levers just touch the ends of the punch pins.

b. REQUIREMENTS. The feed pawl should engage a tooth on the feed-roll ratchet without overtravel.

c. ADJUSTMENT. Adjust the feed pawl eccentric screw.

480. Tape-Feed Pawl Spring Tension Adjustment (fig. 251)

a. PREPARATION. Hook an 8-ounce scale in the notch in the feed pawl and pull horizontally to the left.

b. REQUIREMENTS. It should require from 1½ to 3 ounces to start the feed pawl moving.

c. ADJUSTMENT. If this requirement is not met, replace with a new spring.

481. Tape-Feed Roll Detent Final Adjustment (fig. 252)

a. PREPARATION. Perforate a length of tape with a series of nine blanks followed by a rub-out and check it against the tape gage (No. 2215).

b. REQUIREMENTS. Perforated tape should meet standard spacing of 10 feed holes to the inch.

c. ADJUSTMENT. Refine the adjustment of the feed-roll detent eccentric to obtain the requirement. If this adjustment is changed, recheck the tape-feed pawl adjustments.

482. Tape-Guide Adjustment

a. PREPARATION. None required.

b. REQUIREMENTS. The tape guide should be positioned so that the tape may be readily inserted into the punch block.

c. ADJUSTMENT. Adjust the tape guide by means of its mounting screws.

483. Punch-Hammer Spring Tension Adjustment (fig. 253)

a. PREPARATION. Move the main-shaft until the clutch is disengaged. Hold the lock bail away from the transfer levers, hook a 12-pound scale under the eccentric bushing of the feed pawl and pull upwards.

b. REQUIREMENTS. It should require from 3½ to 5 pounds to start the punch-hammer moving.

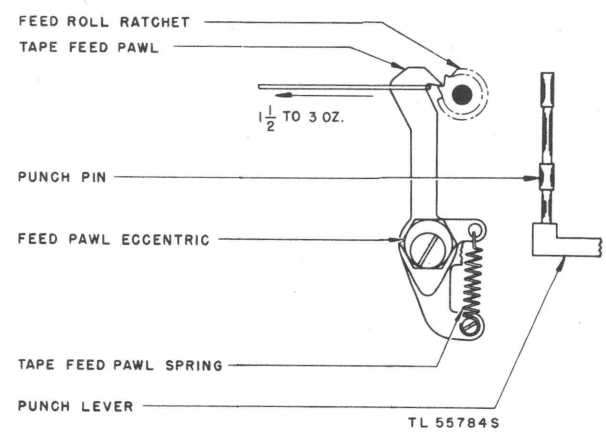

Figure 251. Tape-feed pawl eccentric requirements.

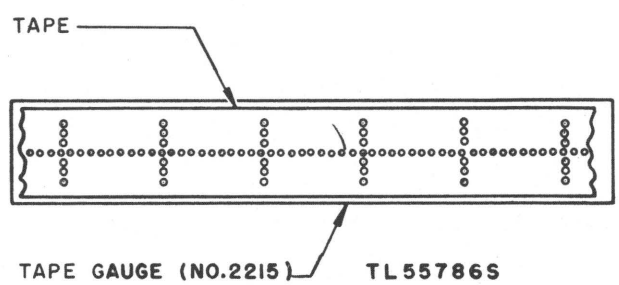

Figure 252. Tape-feed roll detent final adjustment.

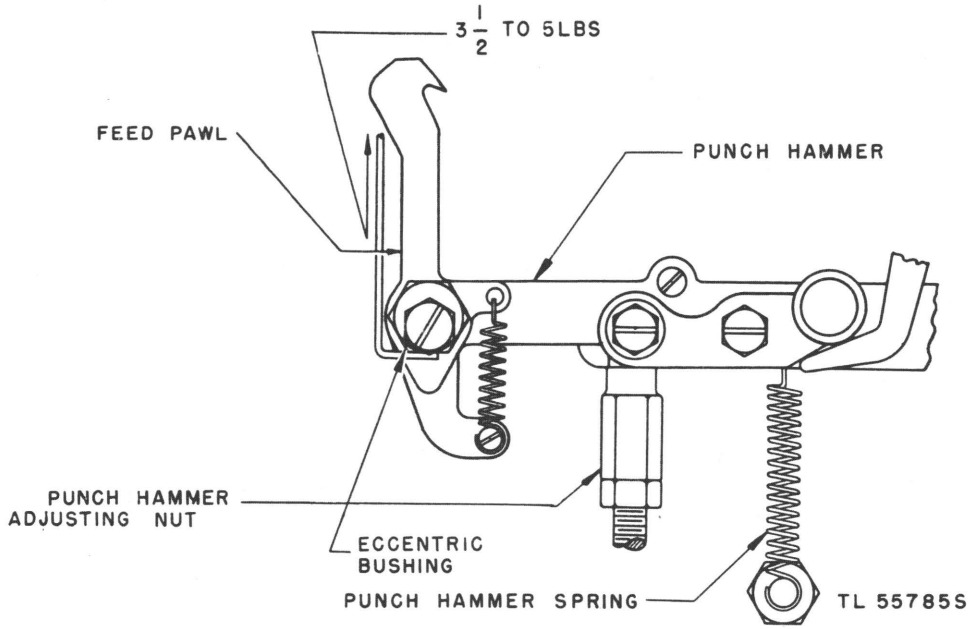

Figure 253. Punch-hammer spring tension requirements.

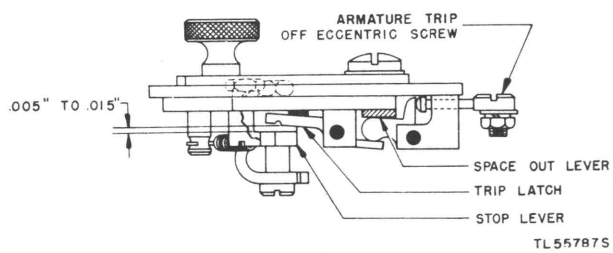

Figure 254. Space-out lever requirements.

c. ADJUSTMENT. If requirement is not met, replace with a new spring.

484. Space-Out Lever Adjustment (fig. 254)

a. PREPARATION. None required.

b. REQUIREMENTS. (1) The space-out lever should move freely in its guides.

(2) With the space-out lever in the down position, the trip latch should clear the stop lever by from 0.005 inch to 0.015 inch.

c. ADJUSTMENTS. (1) Adjust the space-out lever guide post by means of its locknut.

(2) Bend the lower end of the space-out lever.

485. Space-Out Lever Spring Tension Adjustment

a. PREPARATION. Push down on the top of the manual space-out lever with an 8-ounce scale.

b. REQUIREMENTS. It should require a pressure of from 5 to 8 ounces to start the lever moving.

c. ADJUSTMENT. If requirement is not met, replace with a new spring.

486. Speed-Adjusting Wheel Friction-Washer Spring Pressure Adjustment (fig. 255)

a. PREPARATION. Remove the governor adjusting bracket, the brush spring plate, and the governor cover. Rotate the speed-adjusting wheel to a point where the governor contact pressure is from 13 to 14 ounces as indicated by hooking a 32-ounce scale over the contact spring next to the contact point and pulling parallel to the speed-adjusting spring. Insert a bank pin (radially) in the leather rim of the speed-adjusting wheel and hook a 32-ounce scale over the pin at the periphery of the adjusting wheel and pull horizontally at right angles to the pin.

b. REQUIREMENTS. It should require from 8 to 16 ounces to start the wheel moving.

c. ADJUSTMENT. Remove the friction washer and bend the large projections. Replace all parts removed.

487. Inner and Outer Disk Contact-Spring Adjustments (fig. 256)

a. PREPARATION. Remove the governor cover, target, and brush spring plate.

b. REQUIREMENTS. The distance from the inside surface of the governor cover to the highest point on the contact springs should be from 25/32 inch to 27/32 inch. Place a D socket wrench over the nut, located in the center of the governor cover, which is used to hold the contact springs in place. With a 6-inch scale, measure the radial distance from the vertical surface of the wrench to the point where the scale touches the curved surface of the inner disk contact spring. This should be from 17/32 inch to 19/32 inch. In a similar manner, measure the distance from the wrench to the point of contact on the outer disk contact spring. This should be from 7/16 inch to ½ inch.

c. ADJUSTMENT. These requirements may be obtained by bending the contact springs. Replace the governor cover, target, and brush spring plate.

488. Governor-Brush Spring Plate Bracket Adjustment (figs. 257 and 258)

a. PREPARATION. None required.

b. REQUIREMENTS. The governor-brush spring plate should be set so that a line through the center of the outer disk also passes through the centers of both contact brushes. The surface of the brush spring plate bracket, on which the brush spring plate is mounted, alines with the outer surface of the part of the governor cover on which the target is mounted. The bracket is parallel to the edge of the motor-base plate.

c. ADJUSTMENT. Adjust the brush spring plate bracket by means of its enlarged mounted holes.

489. Governor-Brush Spring Pressure Adjustment (fig. 258)

a. PREPARATION. None required.

b. REQUIREMENTS. (1) *Inner disk brush*

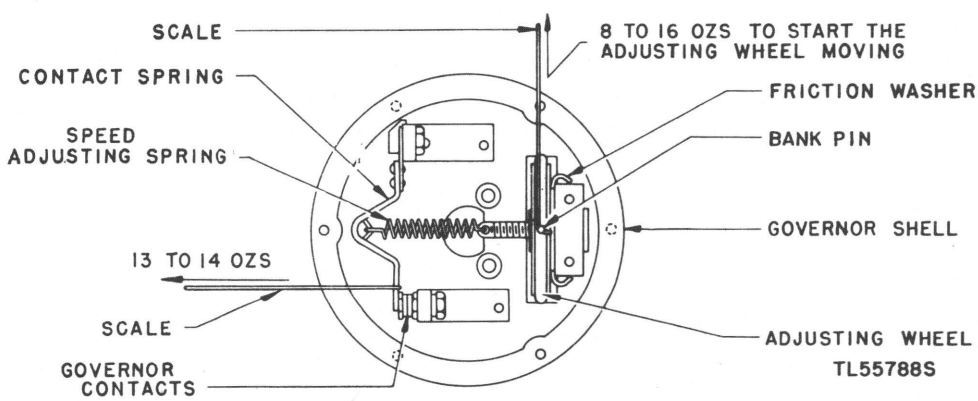

Figure 255. Speed-adjusting wheel requirements.

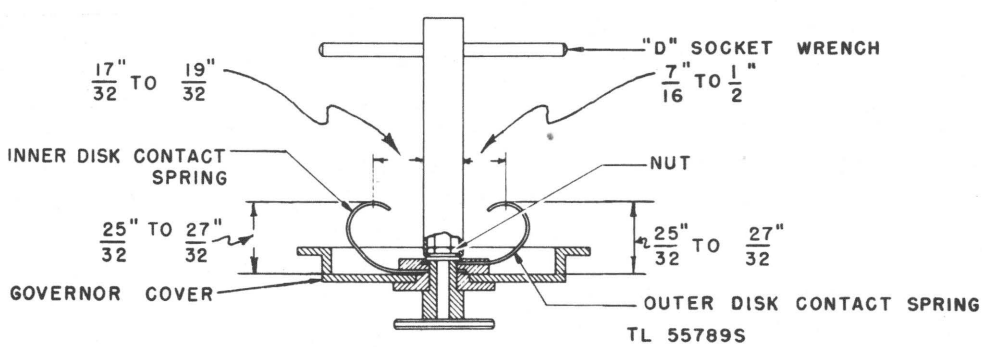

Figure 256. Inner and outer disk contact-spring requirements.

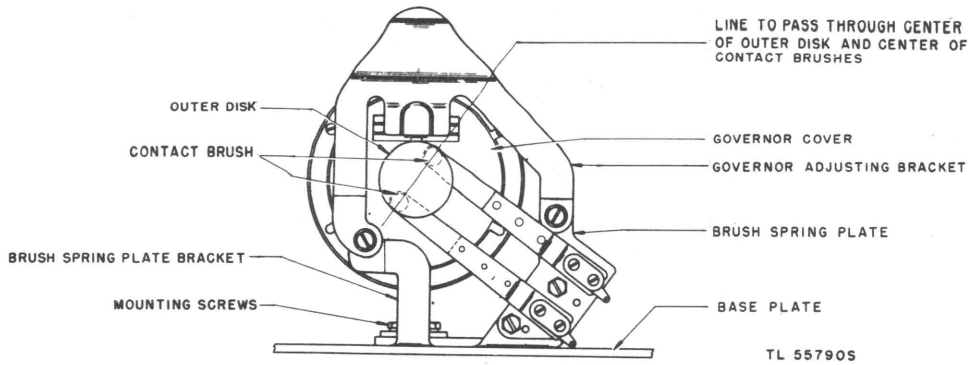

Figure 257. Governor-brush spring plate bracket requirements.

spring. Hook an 8-ounce scale over the inner spring just in front of the carbon contact brush. Pulling horizontally away from the motor, it should require from 4½ to 5½ ounces to start the brush moving away from the disk.

(2) *Outer disk brush spring.* Apply an 8-ounce push scale against the outer brush spring, just in front of the carbon contact brush. Pushing horizontally toward the motor, it should require from 4½ to 5½ ounces to start the brush moving away from the disk.

c. ADJUSTMENT. To obtain the correct brush spring pressure, remove and bend the brush springs. When the springs are replaced and the pressure obtained, take care that the contact brushes lie flat against their respective disks and that the outer edges of the brushes are either flush with, or not more than 3/64 inch inside, the outer edges of the disks. Replace the governor adjusting bracket.

490. Governor Adjusting Bracket Adjustment (fig. 258)

a. PREPARATION. None required.

b. REQUIREMENTS. The adjusting surface of governor adjusting bracket should clear speed-adjusting wheel by from 0.020 to 0.060 inch.

c. ADJUSTMENT. Secure this clearance by bending the governor adjusting bracket.

491. Starting-Switch Adjustment (figs. 207 and 259)

a. PREPARATION. (1) Remove the motor fan (or handwheel if motor is equipped with handwheel).

(2) Take out the switch end-shield screws and pull out the switch end shield about ½ inch.

(3) Remove the two switch mounting screws, taking care that the shims between the switch bracket and end shield are not lost. Note the number and thickness of the shims at each end of the switch bracket so that later they may be reassembled properly. Remove the end shield.

b. REQUIREMENTS. (1) *Centrifugal weight springs tension.* Remove the centrifugal weight springs (fig. 207) and check the weights and centrifugal-mechanism push collar for freeness. Check the tension of these springs as follows: with one end of the spring held stationary, hook an 8-ounce scale in the other end and pull until the spring measures 1¾ inches over-all. The reading should be 3¾ ounces to 4¼ ounces.

(2) *Starting-switch contact-spring tension.* With the starting switch contact spring resting against the contact backstop and the bracket held so that the contact spring clears the rotor shaft and the centrifugal-mechanism push collar, hook an 8-ounce scale over the contact spring just below the backstop and pull at right angles to the spring. It should require ½ to 1 ounce to start the contact spring moving away from the backstop.

(3) *Replacing the starting switch.* Replace the switch end shield on the shaft. Remount the starting switch on the switch end shield, making certain that the shim pile-up is equal on both sides of the switch bracket. Tighten the two switch mounting screws by alternately tightening each one a little at a time until both are tight. See that there is a fiber washer between the rotor and the pinion end shield. Replace the switch end-shield mounting screws and employ the same procedure as used in tightening the switch mounting screws.

(4) *Shaft requirements.* Remove the No. 82862 collar from the rotor shaft. Apply the push end of a 12-pound scale against the fan end of the shaft and push parallel with the shaft. It should require at least 7 pounds pressure to start the shaft moving.

(5) *Requirements of motors having a three-brush starting switch.* These requirements should not be checked unless there is reason to believe the starting switch is out of adjustment.

(*a*) Remove the motor unit from the base and remove the motor fan and pinion.

(*b*) Remove the switch end-shield screws and the switch commutator mounting screws. Remove the switch end shield.

(*c*) Pull out the rotor until the brush-holder spring is accessible and remove the spring.

(*d*) The tension of the spring for 60-cycle motors should measure 3 to 3¾ ounces when extended to a length of 5 inches, using an 8-ounce scale. The tension of the spring for 50-cycle motors should measure 1½ to 2½ ounces when extended to a length of 5 inches, using an 8-ounce scale.

(*e*) The brush holders should be mounted by means of the center set of mounting holes and should be free.

(*f*) The brush-holder stop pins should be safely within the holes of the fiber disk when all the play in the brush holders has been taken up to make the engagement of the pins with the disk a minimum.

(*g*) Replace the brush-holder spring, making certain that the spring eyes are fully engaged with each other.

(*h*) Replace the switch commutator screws and tighten the two screws alternately a little at a time until both screws are tight.

(*i*) Replace the switch end-shield screws using the same precaution in tightening as above.

(*j*) Apply the push end of a 12-pound scale against the fan end of the shaft and push parallel with the shaft. It should require at least 7 pounds pressure to start the shaft moving.

(*k*) Replace the motor fan and pinion. Replace the motor unit on the base and check the motor unit adjustment given in paragraph 459.

c. ADJUSTMENT. (1) *Starting-switch contact-bracket adjustment.* A test set consisting of resistors and milliammeter wired as shown on figure 259 is used in connection with this adjustment. With a 110-volt d-c battery and motor connected as shown, when the starting-switch contacts are closed no current flows through the meter. With the contacts open, however, battery flows through the meter, limited by resistors and motor windings.

(2) With the test set connected to the motor as shown in figure 259 check the starting-switch contact-bracket adjustment as follows: set the No. 82862 collar on the rotor shaft at the switch end of the motor so that there is 1/32-inch clearance between the collar and the motor casting. (The No. 82862 collar is not a part of the motor but is a tool for use in checking this adjustment.) Press against the end of the rotor shaft until the collar is against the end casting, and slowly turn the rotor one complete revolution, observing the meter on the test set. The meter needle should remain on zero indicating that the contacts remain closed. If the contacts opened, shims should be added between the starting-switch bracket and the motor end shield.

(3) Loosen the collar setscrew and relocate the collar so that there is 1/16-inch clearance between the collar and the casting. The rotor

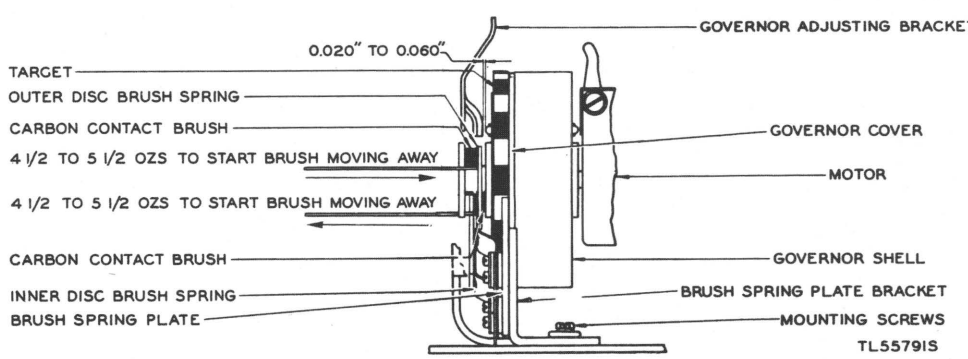

Figure 258. Governor-brush spring requirements.

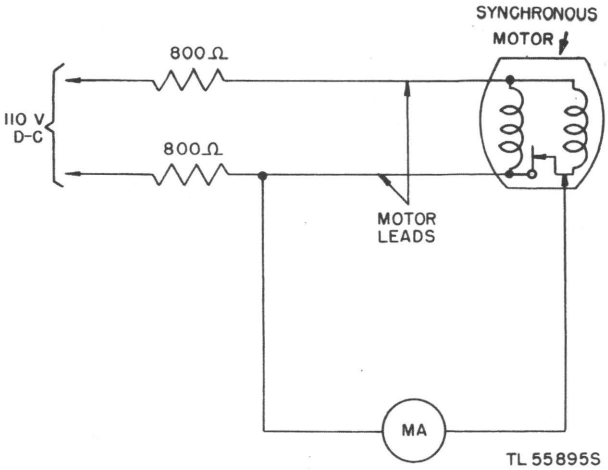

Figure 259. Starting-switch test circuit.

shaft should again be pressed until the collar is against the casting and slowly turned one complete revolution. During this time the meter should read not less than 0.010 ampere, indicating that the contacts remain open. If the contacts close, shims should be removed from between the starting-switch bracket and the motor end shield. If the shims are removed, recheck (2) above.

(4) If the requirements in *b* (1) are not met, replace with new weight springs.

(5) To meet the requirements given in *b* (2), adjust by bending the contact spring. Care should be taken to avoid bending this spring excessively. Replace the centrifugal weight springs.

(6) If the requirements given in *b* (4) are not met, install a new thrust spring. Replace the motor pinion and the fan (or handwheel, if the motor is equipped with a handwheel). Replace the motor unit on the base and check motor unit adjustment given in paragraph 459.

Note. For the method of adjusting the line and selector circuits closing jack, contact gap, and contact spring tension, refer to section XV, book 1.

492. Removing and Replacing Starting Switch or Centrifugal Mechanism

a. REMOVING THE STARTING SWITCH OR CENTRIFUGAL MECHANISM (FIG. 207). (1) Remove the motor unit from the base and remove the motor pinion and motor fan (or handwheel, if the motor is equipped with a handwheel).

(2) Take out the switch end-shield mounting screws.

(3) Pull out the switch end shield slightly and remove the switch mounting screws, taking the same precautions as noted in paragraph 491 *a* (3).

(4) Unsolder the stator leads connected to the starting switch.

(5) Remove the ball bearing. A bearing puller should be used, and care should be taken so as not to dent the brass covering that encloses one face of the bearing or to burr the shaft. Never use a hammer, chisel, or any tool of that nature, directly against the face of the inner or outer ring.

Note. When handling the bearing, it is of the utmost importance that no dirt be allowed to enter the bearing. Dirt, grit, dust, or foreign matter of any kind acts as an abrasive, which, when ground between the revolving balls, will wear out the races. Before replacing, it is well to wash the bearing in kerosene or gasoline and then spin the bearing to remove the dirt. When laying a bearing down, lay it on a clean piece of paper, never on a dirty bench or table top. New bearings should not be unwrapped until ready to be used.

(6) The starting switch may now be removed. To remove the centrifugal mechanism, remove the two mounting screws.

b. ASSEMBLING THE STARTING SWITCH OR CENTRIFUGAL MECHANISM (FIG. 207). (1) Asemble the centrifugal mechanism to the rotor by means of the two centrifugal-mechanism mounting screws, making certain that the insulator has been mounted properly between the mechanism and the rotor.

(2) Place the fiber push collar washer on the switch end of the rotor shaft in front of the centrifugal-mechanism push collar.

(3) Insert the rotor partly in the stator with the switch end partly out of the frame.

(4) Place the starting switch on the shaft against the push collar washer, with the contact spring toward the rotor. With the contact points of the starting switch in the upward position, solder the two wires that are tied together to the upper terminal of the starting switch.

(5) Before replacing the bearing, wipe the shaft clean and examine for burrs or corrosion. If necessary, use emery cloth, dressing down the shaft just enough to remove inequalities of the surface and any burr on the shoulder of the shaft to insure proper seating of the bearing. Now wipe the shaft clean and apply a trace of machine oil to the part of the shaft

that seals the bearing. Replace the ball bearing on the switch end of the rotor shaft with the shielded side of the bearing facing the rotor. The bearing has what is known as a light tap fit, that is, the bearing fits on the shaft so that a series of light taps will drive it in place. The best tool to use is a piece of pipe or tubing, preferably of brass, which is just large enough to slip over the shaft and to bear only on the innner ring. Never apply pressure of any kind to the outer ring, the balls, or the retainer, as this is likely to injure the bearing. It is absolutely essential that the bearing be started straight and that the blows be light. See that the bearing is solidly up against the shaft shoulder. Pack the bearing with approved lubricant.

(6) Place a felt washer and a retaining washer, in the order given, in the switch end shield.

(7) Slide the switch end shield over the switch end of the rotor shaft, inserting the ball bearing in the machined recess of the switch end shield.

(8) Adjust the starting switch, following the instructions given in paragraph 491.

c. REMOVING AND REPLACING BEARINGS. (1) To remove or replace the ball bearing on the pinion end of the rotor, proceed as follows:

(*a*) Remove the motor unit from the base and remove the motor pinion and motor fan (or handwheel, if the motor is equipped with a handwheel).

(*b*) Take out the pinion end-shield mounting screws and remove the end shield.

(*c*) Proceed as in subparagraph *a*(5) above.

(2) To replace the bearing on the pinion end of the rotor, proceed as follows:

(*a*) Proceed as in subparagraph *b*(3) above.

(*b*) Assemble in the pinion end shield the following, in the order given: felt washer, cup washer, thrust spring, and thrust-spring washer.

(*c*) Replace the end-shield mounting screws, tightening alternately each screw a little at a time until each is tight.

Note. Before making the adjustments given in paragraph 493 following, refer to TM 11-2513 for information on adjusting polar relays. Use a Test Set I-193-A (if available) for adjusting the relay or proceed as instructed in the following paragraph.

493. Line Relay Adjustment (fig. 260)

a. PREPARATION. (1) *Relay and cover.* Remove the relay cover and blow out any accumulated dust. Wipe the relay and the cover with a clean soft cloth.

(2) *Contacts.* (*a*) Back out contact screws to permit entrance of contact file. Remove pits and build-ups on the contacts with contact file.

(*b*) When cleaning the armature contacts, support the armature at its midposition by means of the opposite contact screw, to avoid bending the armature or contact springs. Care should be taken in filing the armature contacts to use light pressure.

(*c*) After using contact file, blow out any loose particles and polish the contacts with a burnisher.

(3) *Armature, pole-piece screws, and relay terminals.* (*a*) Remove any particles adhering to the armature or pole-piece screws by pressing a fresh piece of friction tape, wrapped around a piece of thin stiff nonmagnetic metal, against the particles. Do not rub the tape against the armature or pole-piece screws as this rubbing will leave a residue which will collect further particles.

(*b*) Make sure that the pole-piece screws and relay terminals are clean.

b. REQUIREMENTS. (1) *Armature.* (*a*) The armature should not touch the inside of spool.

(*b*) The contacts should aline so that the centers of the contacts will not be out of alinement by more than 25 percent of the contact diameter.

(2) *Armature contact springs alinement.* The armature contact springs should be parallel to the armature. The tips of the armature contact springs should rest against each other, approximately flat across their width, with a pressure of 1 to 2½ ounces measured on one spring at the contact with the other spring held so that it cannot follow its mate. If necessary, back off the contact screws.

(3) *Contact screw.* In its normal unoperated position, the clearance between the armature and either contact screw should be approximately equal and when the armature is held against one contact screw there should be 0.003- to 0.005-inch clearance between the armature and the other contact screw.

(4) *Pole-piece screws.* (*a*) When the armature is held first against one contact screw and

807975 O - 48 - 18

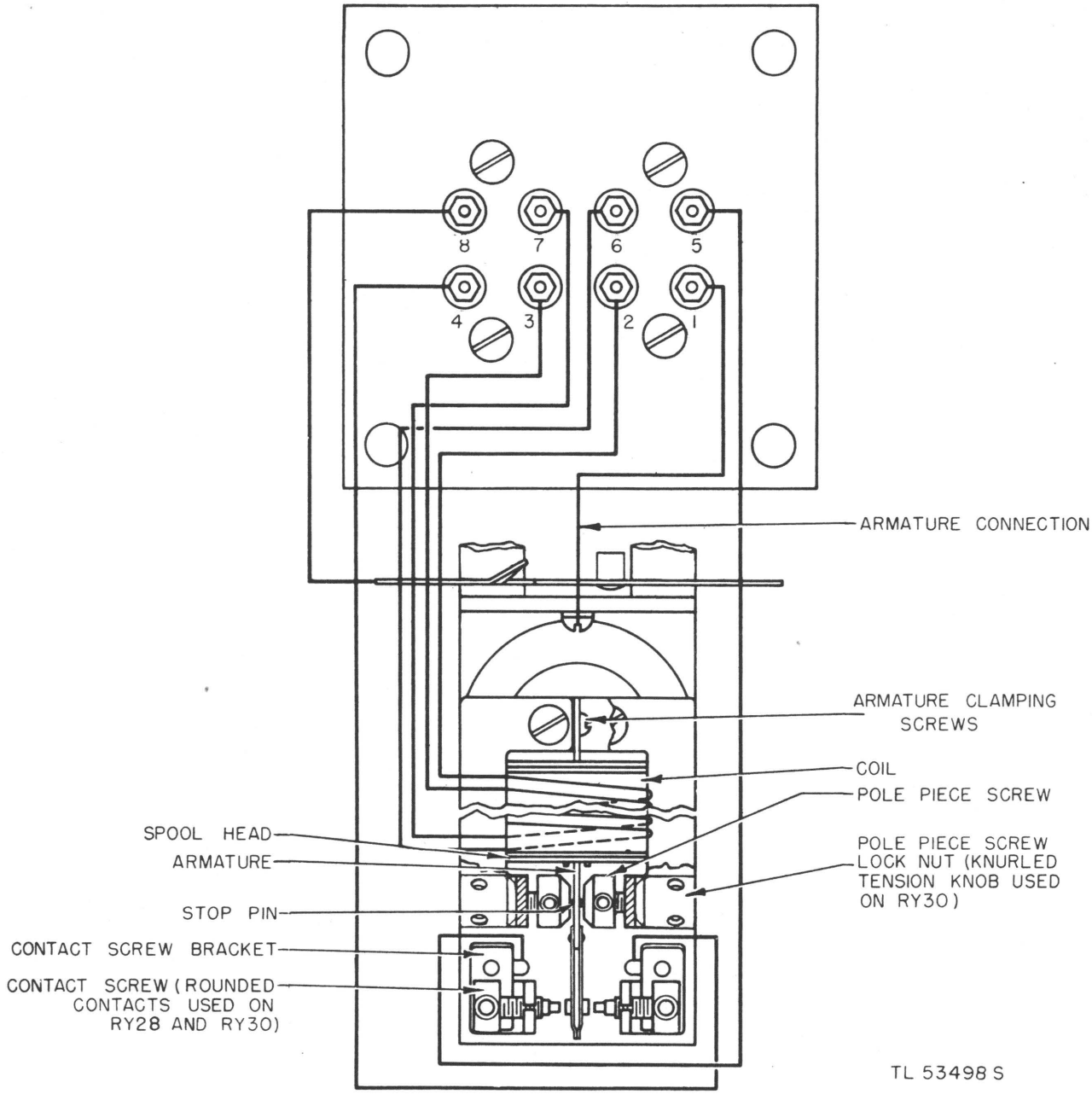

Figure 260. Cross section of line relay.

then against the other, the armature stop pins should not touch the pole-piece screws.

(*b*) The armature should be centered in the magnetic field between the pole-piece screws; that is, the armature either should float in the gap between the contact screws, or it should stay against either contact with approximately the same pressure when moved against either contact by hand.

c. ADJUSTMENTS. (1) *Armature.* (*a*) Loosen the screws holding the spool heads to the relay frame, and position the spool to meet the requirement given in *b*(1)(*a*) above. Tighten the screws.

(*b*) Loosen the armature clamping screws and position the armature both vertically and horizontally to meet the requirement given in *b*(1)(*b*) above. Tighten the screws.

Note. To aid in alineing the armature contacts, the contact screw brackets may be positioned by means of the enlarged mounting holes in the relay frame.

(2) *Armature contact springs alinement.* Bend the armature contact spring toward or away from the other armature contact spring as required to meet the requirement in *b*(2) above, and as close as practicable to the point where the contact spring is riveted to the armature. Reset the contact screws.

(3) *Contact screws.* Back off the pole-piece screws as far as possible and position the contact screws to meet the requirement given in *b*(3) above.

Note. The contact screws should be sufficiently tight in their brackets to hold any adjusted position. If necessary, remove the contact screw from the bracket and force the two portions of the split end of the bracket closer together to meet this requirement.

(4) *Pole-piece screws.* (*a*) Back off both pole-piece screws and check the contact screw adjustment. Readjust if necessary.

(*b*) Advance the right pole-piece screw until, with its locknut (or knurled tension knob) tight, the right pole-piece screw pushes the armature far enough to just touch the left-hand contact screw. Back off the right pole-piece screw approximately ¼ turn from this position until the requirement given in *b*(4) (*a*) is met. Tighten the locknut.

(*c*) Advance the left pole-piece screw until the requirement given in *b*(4) (*b*) is met. Tighten the locknut. If tightening the locknut disturbs the adjustment, reposition the left pole-piece screw to meet the requirement and retighten the locknut.

Note. When adjusting the pole-piece screws on relays with knurled tension nuts, the nuts should be tightened sufficiently to hold the pole-piece screws in the adjusted position.

APPENDIX I

REFERENCES

For availability of items listed, check FM 21–6 and WD Catalog SIG 1 and 2. Also, see FM 21–6 for applicable technical bulletins, supply bulletins, modification work orders, and changes.

1. Technical Manuals Containing Installation and Operation Instructions for Model 14 Typing Reperforator

TM 11–2201 Reperforator Teletypewriter Sets TC–16 and TC–17.
TM 11–2203 Teletypewriter Set AN/TOC–1.
TM 11–2210 132A2 Teletypewriter Subscriber Set and Associated Equipment.
TM 11–2211 133A1 Teletypewriter Table and Associated Printer Apparatus.
TM 11–2212 Semiautomatic Teletypewriter Tape Relay Systems.
TM 11–2214 133A2 Teletypewriter Subscriber Set and Associated Equipment.
TM 11–2216 Teletypewriters TT–7/FG and TT–8/FG.

2. Parts Lists

SIG 1 and 2	Introduction and Index to WD Supply Catalog.
SIG 3	List of Items for Troop Issue.
SIG 4–1	Allowances of Expendable Supplies.
SIG 4–2	Allowances of Expendable Supplies for Schools, Training Centers, and Boards.
SIG 5	Stock list of All Items.
SIG 6	Sets (when published).

SIG 7 and 8	Organizational and Higher Echelon Spare Parts.
SIG 10	Fixed Plant Maintenance List.
SB 11–76	Signal Corps Kit and Materials for Moisture- and Fungi-resistant Treatment.

3. Technical Manuals on Equipment Associated with Model 14 Typing Reperforator and Test Equipment

TM 11–356	Radio Teletype Terminal Equipment AN/FGC–1 or AN/FGC–1X.
TM 11–2042	Volt-ohm-ammeter per D–166852 and Volt-ohmmeter per D–166853.
TM 11–2056	Test Unit I–236.
TM 11–2201	Reperforator Teletypewriter Sets TC–16 and TC–17.
TM 11–2207	The Radioteletype Code Room and Signal Center, Installation Procedure and Maintenance Guide.
TM 11–2208	Test Set TS–2/TG.
TM 11–2209	Teletypewriter Set 131B2.
TM 11–2210	132A2 Teletypewriter Subscriber Set and Associated Equipment.
TM 11–2211	133A1 Teletypewriter Table and Associated Printer Apparatus.
TM 11–2214	133A2 Teletypewriter Subscriber Set and Associated Equipment.
TM 11–2217	Distortion Test Set TS–383/GG (Teletype Signal Testing Equipment).
TM 11–2220	Reperforator Transmitters TG–26–A and TG–27–A.

4. Shipping Instructions

U.S. Army Spec No. 100–14A	Army-Navy General Specifications for Packaging and Packing for Overseas Shipment.

5. Other Publications

TM 3–220	Decontamination.
FM 5–25	Explosives and Demolitions.
FM 5–20	Camouflage, Basic Principles.
FM 21–8	Military Training Aids.
FM 21–40	Defense Against Chemical Attacks.
TB SIG 13	Moistureproofing and Fungiproofing Signal Corps Equipment.
TB SIG 207*	Application of Teletypewriter and Automatic Ciphering Equipment to Fixed Radio and Wire Circuits.
TM 1–455	Electrical Fundamentals.
TM 11–453	Shop Work.
TM 11–456	Wire Telegraphy.
TM 11–486	Electrical Communication Systems Engineering, General Information.
TM 11–487	Electrical Communication Systems Equipment.
TM 38–650	Basic Maintenance Manual.

6. Forms

W.D., A.G.O. Form No. 468.
AAF Form No. 54.

*This Technical Bulletin is distributed only to interested headquarters and to individuals whose duties require that they have it. This Technical Bulletin must be safeguarded in accordance with provisions of AR 380-5.

7. List of Abbreviations

Abbrev (or symbol)	Term or quantity
AAF	Army Air Forces
ac	alternating current (n)
a-c	alternating-current (a)
assem	assembly
cps	cycles per second
dc	direct current (n)
d-c	direct-current (a)
dwg	drawing
hex.	hexagonal
μ	micro (1/1 000,000)
ma	milliampere
mf, μf	microfarad
mtg	mounting
Ω, w	ohm
opm	operations per minute
SPDT	single-pole, double-throw
spec	specification
SPST	single-pole, single-throw
term.	terminal
v	volt
vps	vibrations per second
w	watt

8. Glossary

The following glossary contains explanations of the technical terms used in this manual.

Battery. The term battery is normally used when referring to a group of dry cells or storage cells. In teletypewriter communication, it is common usage to refer to any d-c source used in the production of teletypewriter signals as *battery.*

Function. The term function refers to an operation performed by a reperforator such as carriage return, line feed, figures (shift), letters (shift), motor stop, bell, etc., that normally is not associated with a printed character.

Mark Impulse. In neutral operation the term mark impulse refers to the closed circuit signal and the term space impulse refers to the open circuit signal. In other than neutral operation, the term mark impulse is applied to the circuit conditions which will produce the same result in the terminal equipment that a mark impulse produces in neutral operation. Similarly, the term space impulse is applied to the circuit condition which will produce the same result in the terminal equipment that a space impulse produces in neutral operation.

Neutral Operation. The term neutral operation refers to the system whereby marking signals are formed by current impulses of one polarity, either positive or negative, and spacing signals are formed by reducing the current to zero or nearly zero.

Operations Per Minute. The term operations per minute refers to the number of functions performed or characters printed per minute. The equipment goes through one complete cycle of operation for each function performed or character printed.

Polar Operation. The term polar operation refers to the system whereby marking signals are formed by current impulses of one polarity and spacing signals by current impulses of equal magnitude but of opposite polarity.

Space Impulse. See mark impulse.

Turn Down. The term turn down refers to machining the part in a metal-turning lathe to resurface the part.

Undercut. The term undercut refers to the operation of removing a portion of the insulation between the segments of motor commutators so that the insulation is below the surface of the adjoining segments.

9. Parts Identification Illustrations for Typing Reperforators

All parts used in the model 14 (FPR5, FPR17, FPR21, and FPR23) typing reperforators are illustrated in figures 261 through 298. The parts are shown in relation to the other parts of their immediate units or assemblies, since identification of individual parts is often difficult to make. All parts on one figure are common to all typing reperforators listed in the figure title, unless otherwise noted within the illustration. The illustrations are grouped as follows:

	FPR 5	*FPR 17*	*FPR 21*	*FPR 23*
Figures 261 through 269	X	X	X	X
Figures 270 and 271	X		X	X
Figures 272 through 275		X	X	X
Figure 276			X	X
Figure 277	X	X		
Figure 278		X	X	
Figures 279 and 280			X	X
Figures 281 and 282	X			
Figures 283 through 290		X		
Figures 291 through 293			X	
Figures 294 through 298				X

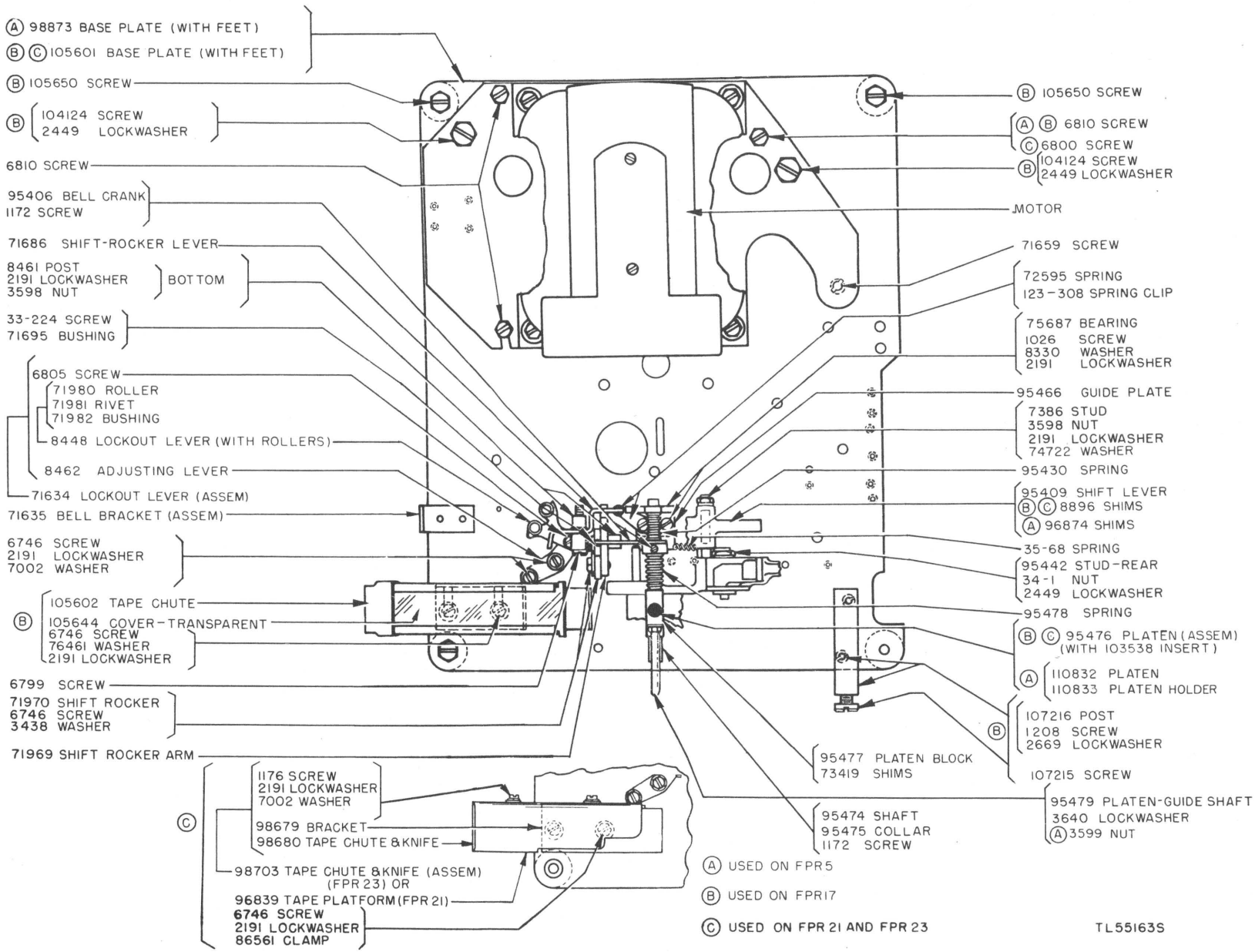

Figure 261. Base-plate parts (FPR5, FPR17, FPR21, and FPR 23).

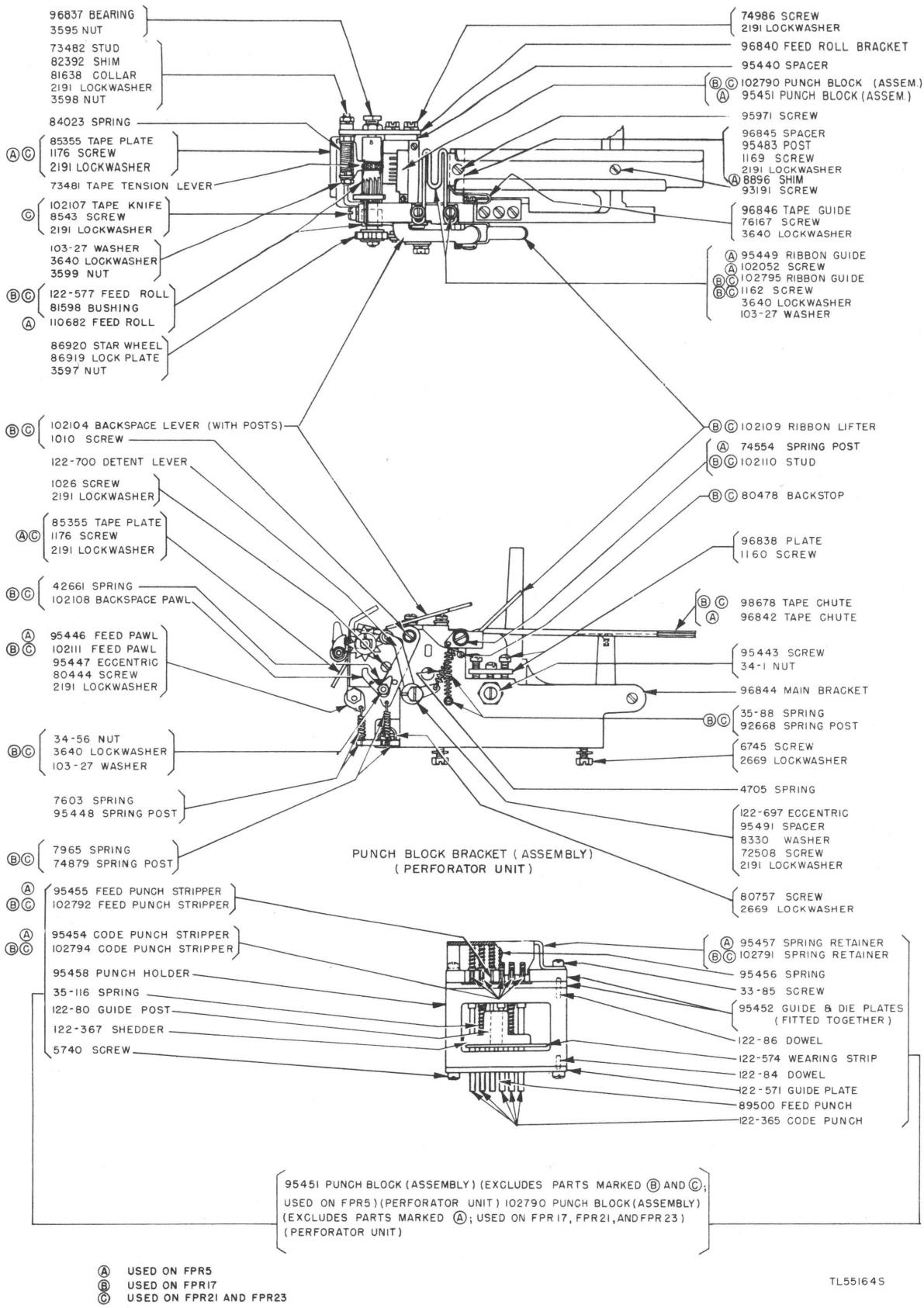

Figure 262. Punch block and punch-block bracket parts (FPR5, FPR17, FPR21, and FPR23).

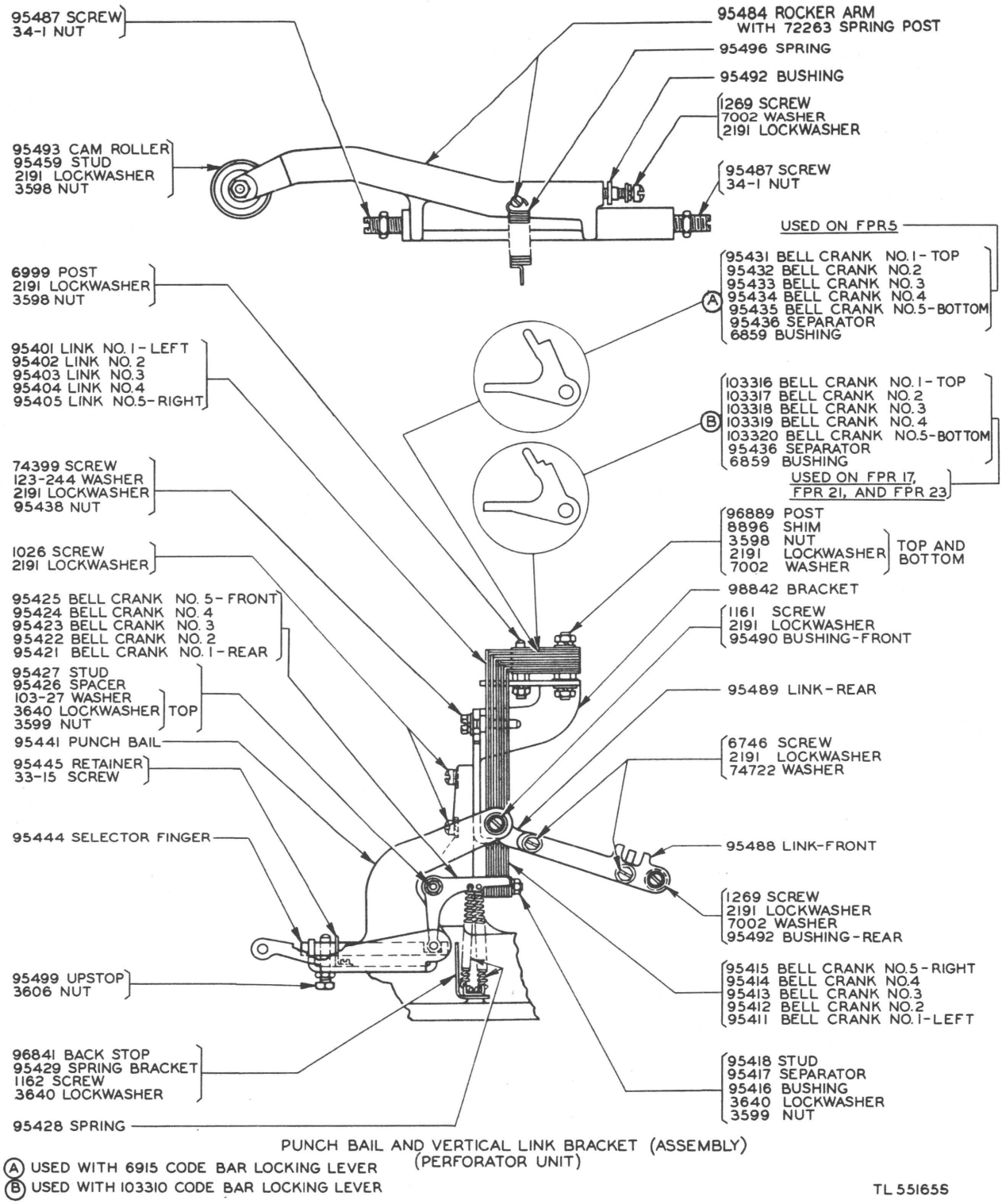

Figure 263. Punch-bail and vertical-link bracket parts (FPR5, FPR17, FPR21, and FPR23).

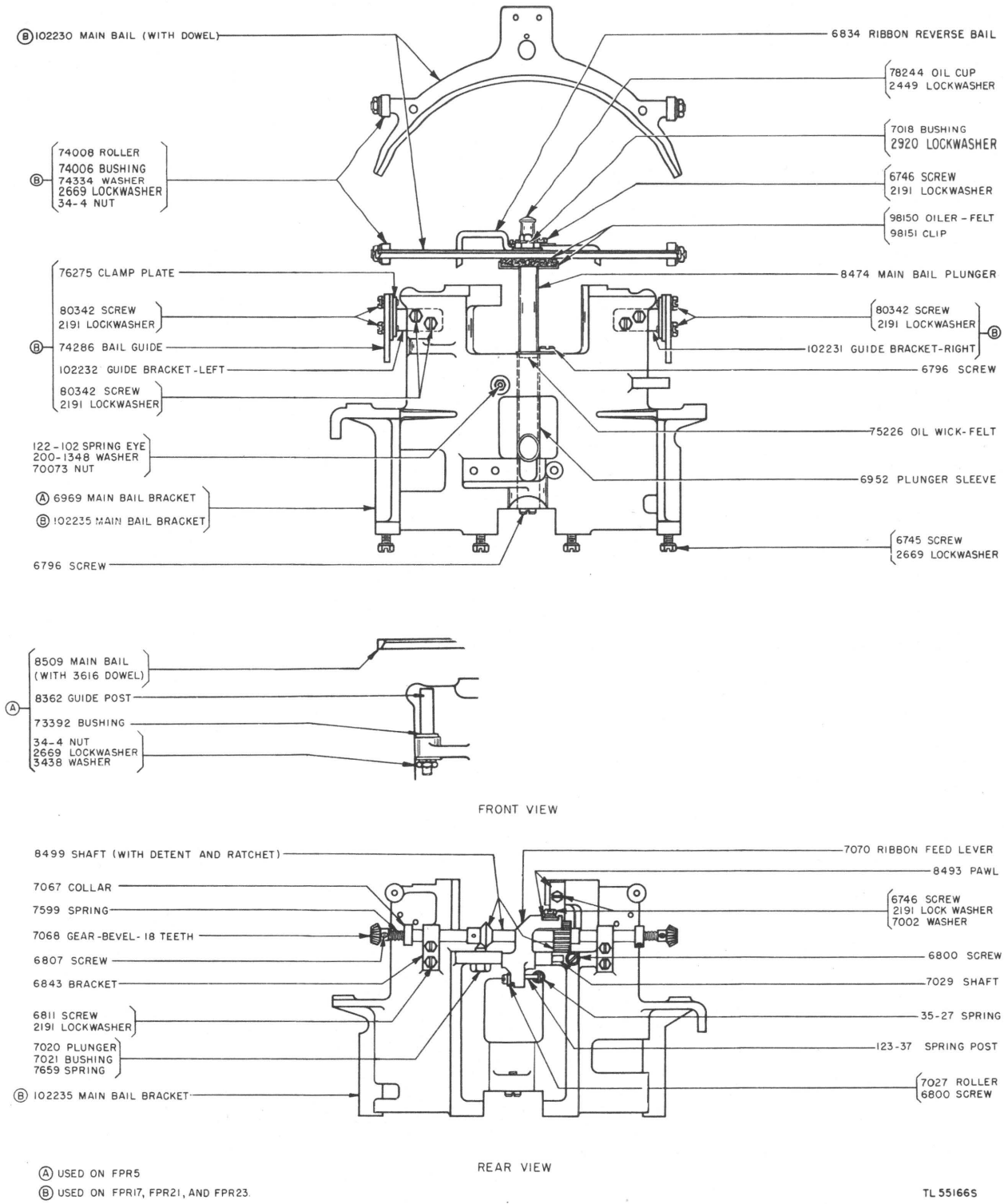

Figure 264. Main-bail bracket parts (FPR5, FPR17, FPR21, and FPR23).

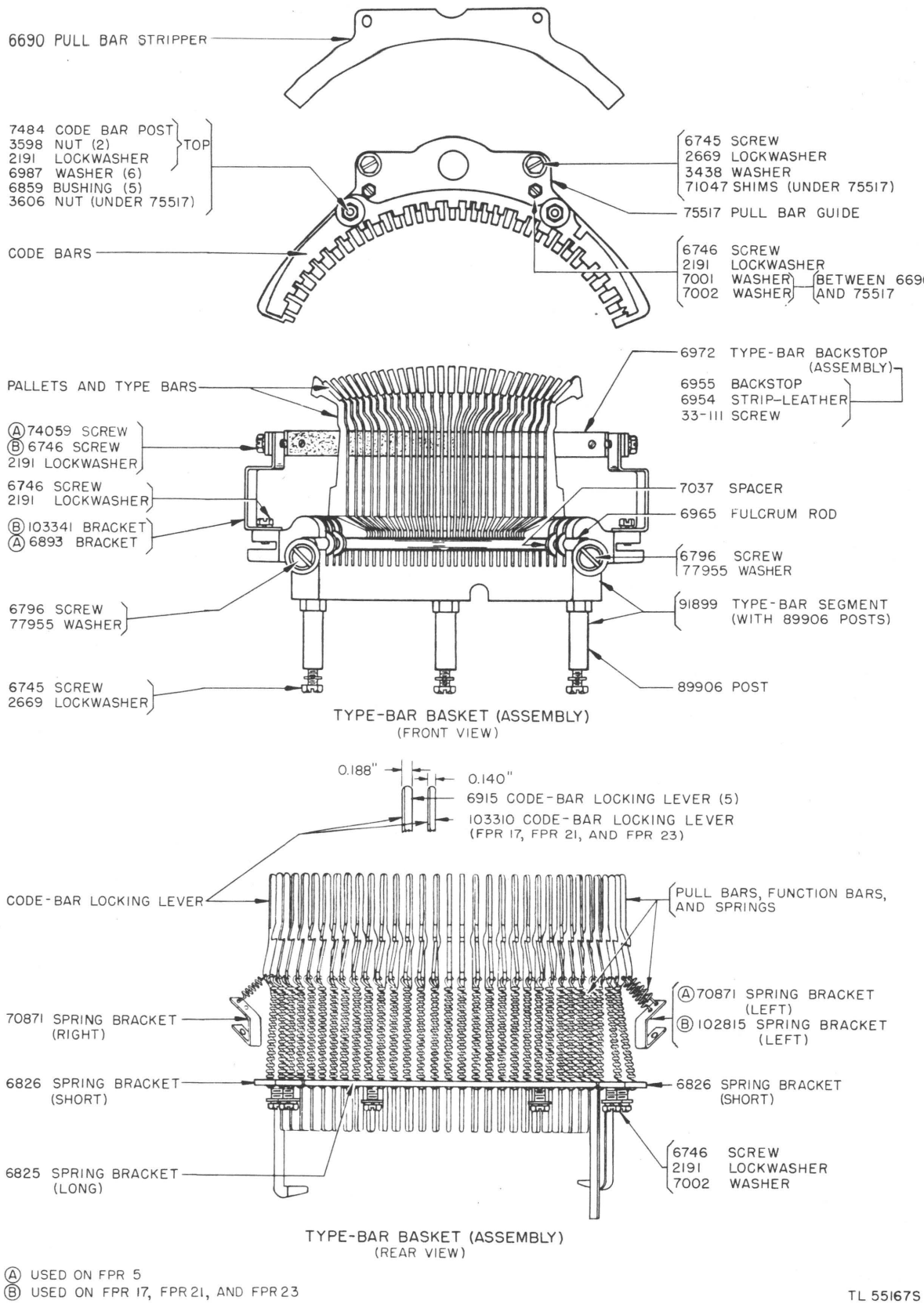

Figure 265. Type-bar basket and code bar parts (FPR5, FPR17, FPR21, and FPR23).

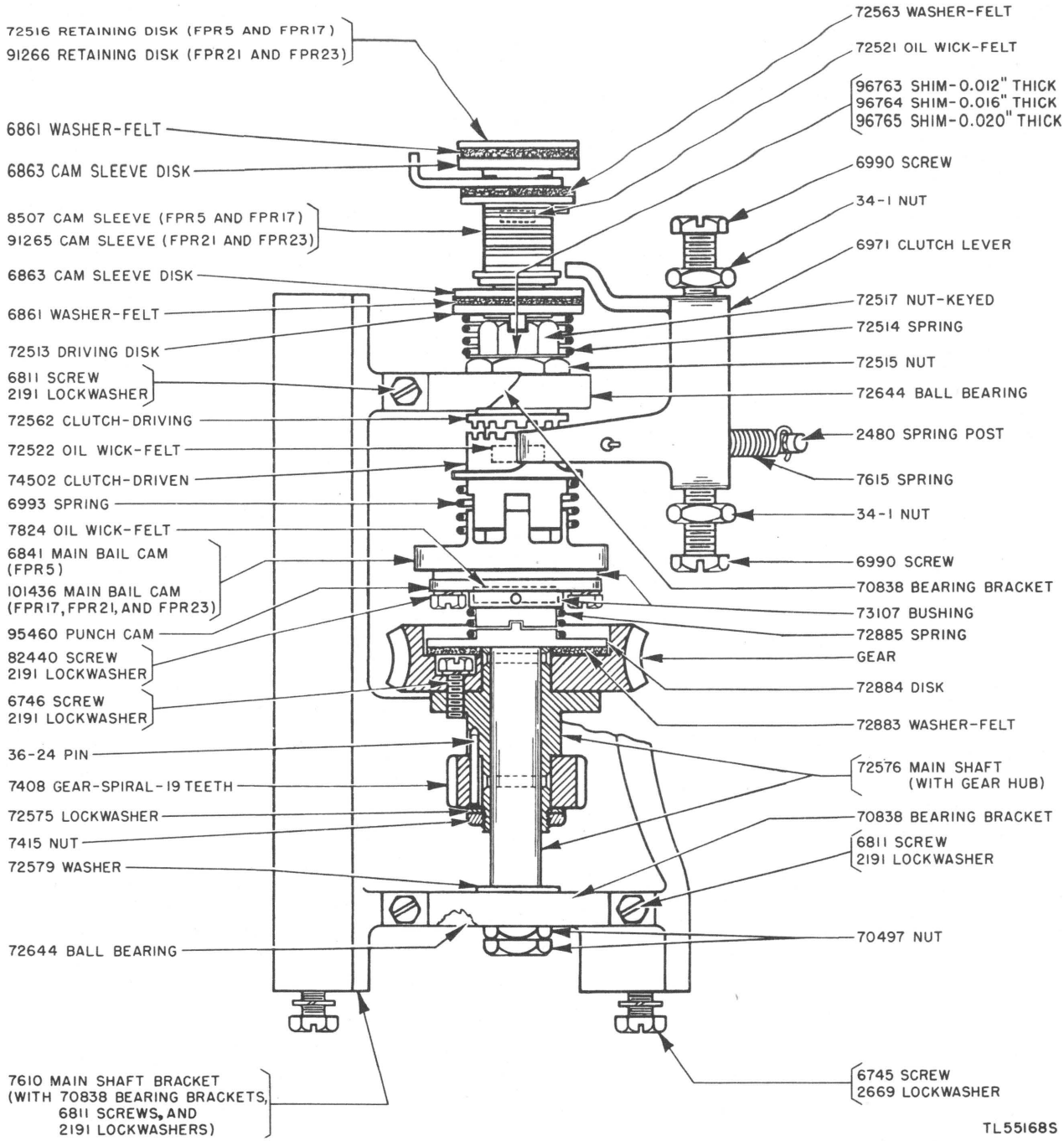

Figure 266. Main-shaft parts (FPR5, FPR17, FPR21, and FPR23).

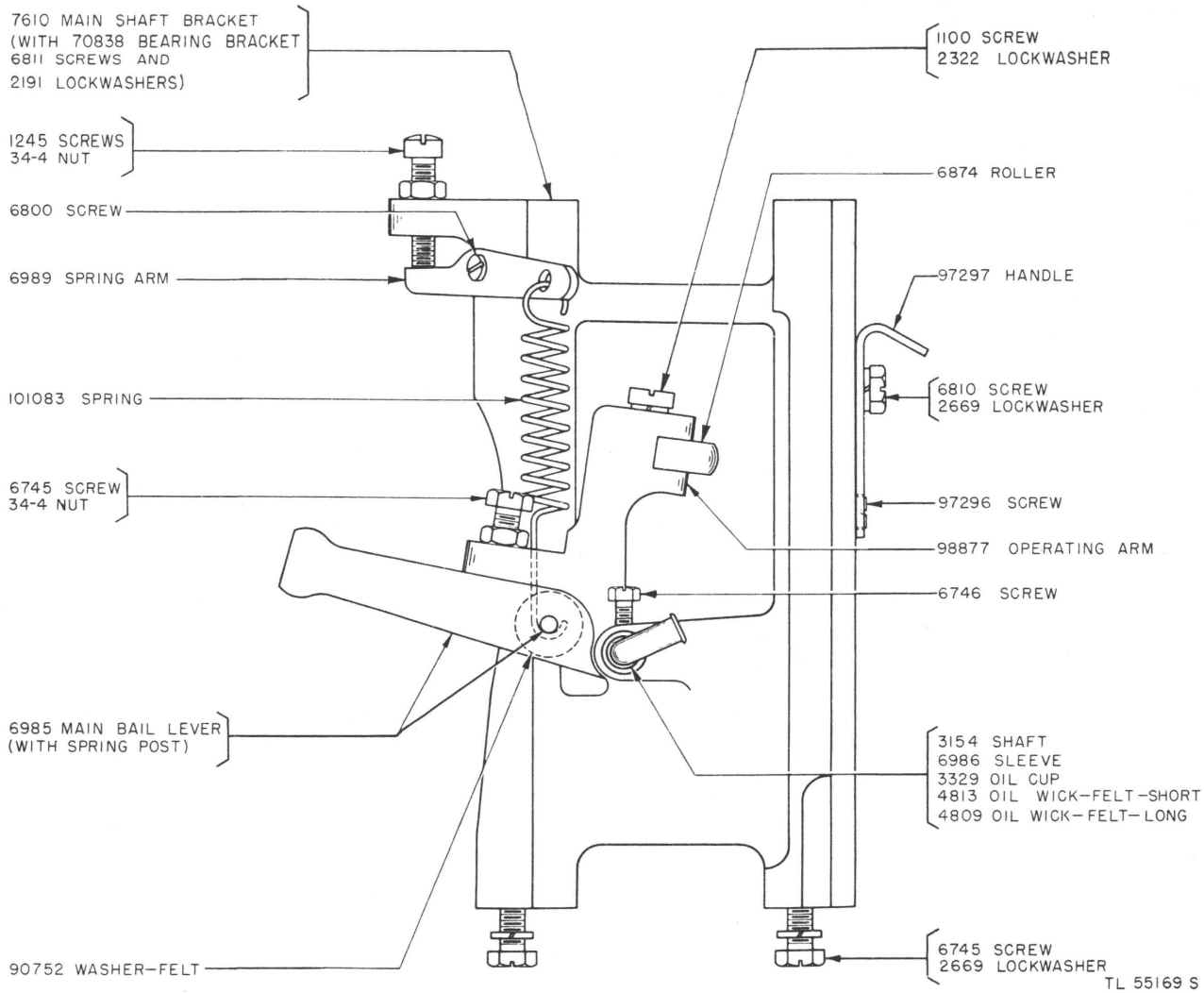

Figure 267. Main-shaft bracket parts (FPR5, FPR17, FPR21, and FPR23).

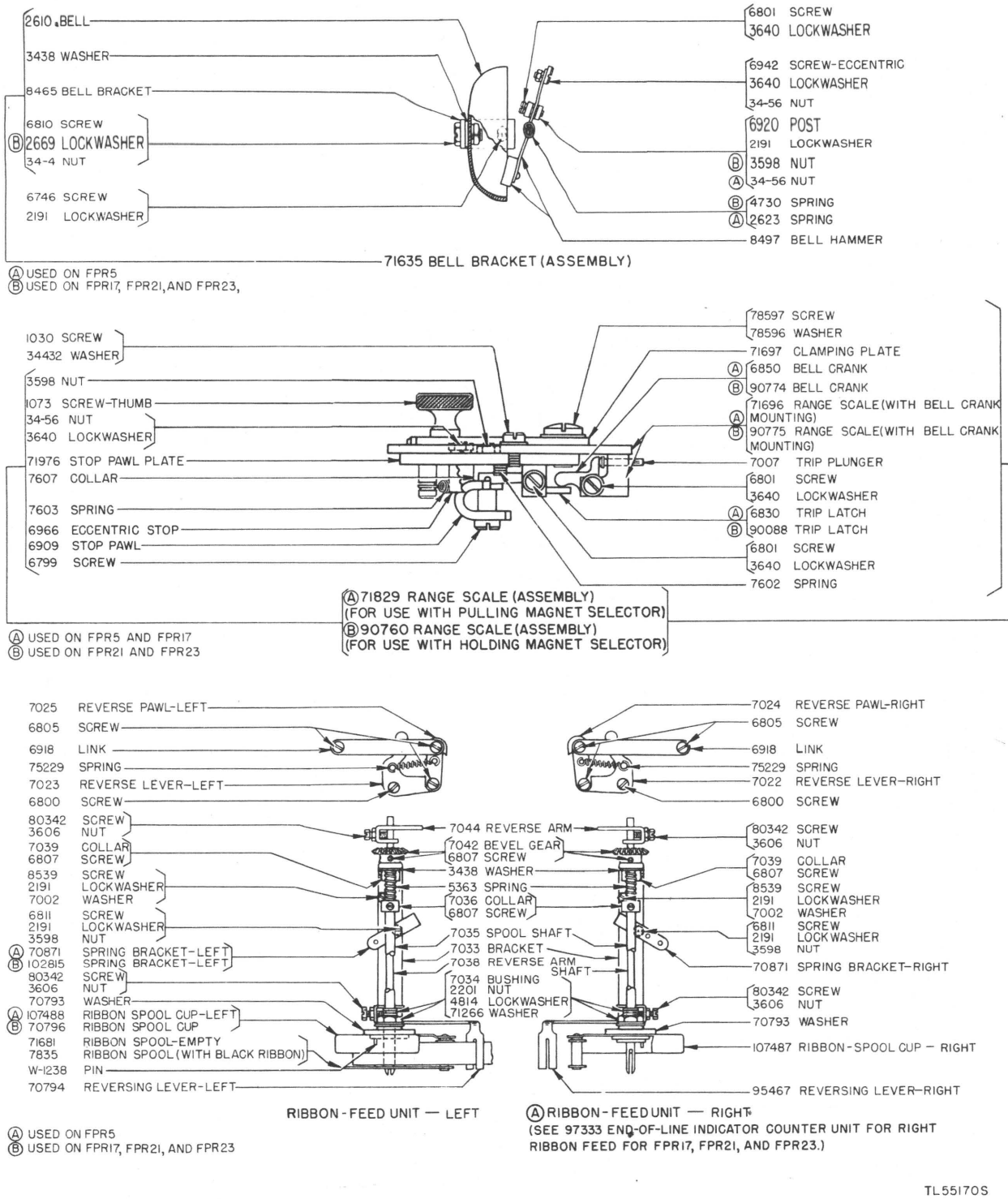

Figure 268. Bell bracket, range scale, and ribbon-feed unit parts (FPR5, FPR17, FPR21, and FPR23).

NUMBER OF POSITION IN SEGMENT	PULL AND FUNCTION BAR		PULL & FUNCTION BAR SPRING	TYPE BAR (WITHOUT PALLET)		PALLET		TYPE BAR (WITH PALLET)	USED IN PELLET ARRANGEMENT			KEYTOP (SPRING CUSHION)		USED IN KEYTOP ARRANGEMENT	
	DESCRIPTION	PART NUMBER		STAMPED	PART NUMBER	DESCRIPTION	PART NUMBER		193	222	226	DESCRIPTION	PART NUMBER	KH	KQ
1	SPACE	6916	7965	—	—	—	—	—				—	—		
2	LTRS SHIFT	6916	7965	—	—	—	—	—				LTRS	78973	X	X
3	BELL ON UPPER CASE S	(A) 8457	7825	—	—	—	—	—				S BELL	78980	X	X
		(B) 102877	7634	0	78175	Ω	102653	99036		X	X				
4	S PULL BAR	8458	7634	1	7421	S	98923	99028	X	X	X	S BELL	78980	X	X
5	STANDARD	6692	7634	2	7422	X /	98941	98968	X	X	X	X /	78968	X	X
6	STANDARD	6692	7634	3	7423	Q 1	98915	98969	X	X	X	Q 1	78962	X	X
7	STANDARD	6692	7634	4	7424	V ⊕	98949	98970		X		V ⊕	89424		X
						V ;	98910	98971	X		X	V ;	78966	X	
8	STANDARD	6692	7634	5	7425	G ↘	98954	98973		X		G ↘	89417		X
						G &	98919	98974	X		X	G &	78952	X	
9	STANDARD	6692	7634	6	7426	W 2	98916	98975	X	X	X	W 2	78967	X	X
10	STANDARD	6692	7634	7		(B) F →	98953	98976		X		F →	89416		X
					7427	(B) F !	98926	98977			X	F !	78951	X	
						(A) F	98922	98979	X						
11	STANDARD	6692	7634	8	7428	C ○	98947	98980		X		C ⊖	89423		X
						C :	98911	98981	X		X	C :	78948	X	
12	STANDARD	6692	7634	9	7429	D ↗	98952	98983		X		D ↗	89415		X
						D $	98943	98984	X		X	D $	78949	X	
13	STANDARD	6692	7634	10	7430	R 4	98928	98985	X	X	X	R 4	78963	X	X
14	STANDARD	6692	7634	11	7431	(B) J ↙	98956	98986		X		J ↙	89419		X
						(B) J '	98902	98987			X	J '	78955	X	
						(A) J	98921	99027	X						
15	STANDARD	6692	7634	12	7432	A ↑	98951	98990		X		A ↑	89414		X
						A -	98912	98991	X		X	A -	78946	X	
16	STANDARD	6692	7634	13	7433	T 5	98931	98992	X	X	X	T 5	78964	X	X
17	STANDARD	6692	7634	14	7434	E 3	98930	98993	X	X	X	E 3	78950	X	X
18 18	STANDARD	6692	7634	15	7435	(B) N ⊕	98948	98994		X		N ⊕	89426		X
						(B) N ,	98909	98995			X	N ,	78959	X	
						(A) N '	98925	98997	X						
19	STANDARD	6692	7634	16	7436	I 8	98917	98998	X	X	X	I 8	78954	X	X
20	STANDARD	6692	7634	17	7437	O 9	98933	98999	X	X	X	O 9	78960	X	X
21	STANDARD	6692	7634	18	7438	H ↓	98955	99000		X		H ↓	89418		X
						H £	98920	99001	X		X	H	92258	X	

CODE BARS																	
STAMPED	PART NUMBER																
1J	95461	22	STANDARD	6692	7634	19	7439		L ↖	98958	99003		X		L ↖	89421		X
1K	99264								L)	98945	99004	X		X	L)	78957	X	
2	104582	23	STANDARD	6692	7634	20	7440		U 7	98932	99006	X	X	X	U 7	78965	X	X
2J	95462	24	STANDARD	6692	7634	21	7441	Ⓑ	M .	98904	99007		X	X	M .	78958	X	X
2K	99284							Ⓐ	M %	98942	99008	X						
3	104583	25	STANDARD	6692	7634	22	7442		Y 6	98929	99010	X	X	X	Y 6	78969	X	X
3J	95463	26	STANDARD	6692	7634	23	7443	Ⓐ	P 0	98918	99011	X						
3K	99285							Ⓑ	P ø	104845	104951		X	X	P ø	99564	X	X
3L	99331	27	STANDARD	6692	7634	24	7444		B ⊕	98946	99012		X		B ⊕	89425		X
4	104584								B ?	98927	99013	X		X	B ?	78947	X	
4J	95464	28	STANDARD	6692	7634	25	74445		K ←	98957	99015		X		K ←	89420		X
4K	99286								K (	98944	99016	X		X	K (	78956	X	
5J	95465	29	STANDARD	6692	7634	26	7446		Z +	98950	99018		X		Z +	89422		X
5K	99287								Z "	98903	99019	X		X	Z "	78970	X	
		30	Ⓐ STANDARD	6692	7634	27	7447	Ⓐ	. ,	98907	98022	X			CAR RET	78976	X	X
			Ⓑ COUNTER RESET	89233				Ⓑ	< <	101582	99032		X	X				
		31	STANDARD	6692	7634	28	7448	Ⓑ	≡ ≡	101583	99033		X	X	LINE FEED	78978	X	X
								Ⓐ	= #	98914	99025	X						
		32	BLANK	6692	7634	29	Ⓒ 7885		≀≀ ≀≀	101579	99034			X	BLANK	78971	X	
							Ⓓ 98895		≀≀ -	102655	——		X		-	89413		X
		33	FIGS SHIFT	6917	7825	——	——	——	——	——	——				FIGS	78972	X	X
		34	CODE BAR LOCKING LEVER	Ⓐ 6915	3610	——	——	——	——	——	——				——	——		
				Ⓑ 103310	3610													

NOTES:

Ⓐ USED ON FPR5

Ⓑ USED ON FPR17, FPR21, AND FPR23

Ⓒ STANDARD BLANK TYPE BAR (PRINTS IN LETTERS AND FIGURES POSITIONS)

Ⓓ SPECIAL BLANK TYPE BAR (PRINTS IN FIGURES POSITION ONLY)

KEYTOP AND PALLET ARRANGEMENTS		PART NUMBERS FOR COMPLETE SETS		USED WITH
KEYTOP ARRANGEMENTS	KH	105148	SETS OF KEYTOPS	226
	KQ	105278		222
PALLET ARRANGEMENTS	222	105280	SETS OF PALLETS	KQ
	226	105562		KH

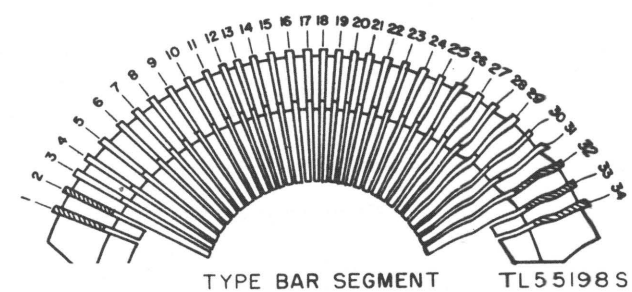

Figure 269. Pull bars, type bars, pallets and key tops (FPR5, FPR17, FPK21, and FPR23).

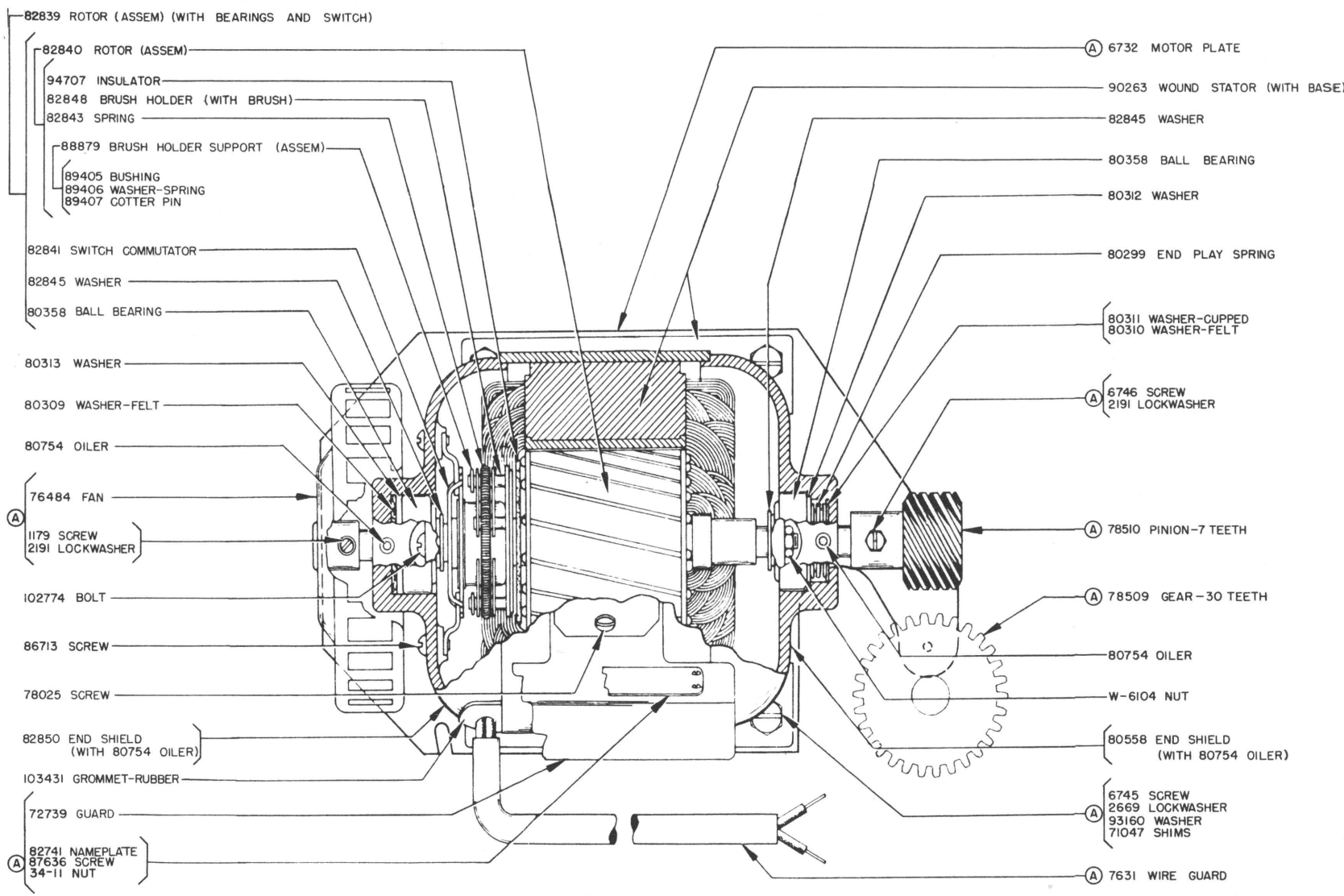

NEW STYLE SYNCHRONOUS MOTOR

82283 SYNCHRONOUS MOTOR, 1/40 HP, 110 V, 60 CYCLE, AC (GE MODEL 5SH25AB11B) EXCLUDES PARTS MARKED (A)

86933 MOTOR UNIT (ASSEMBLY)-INCLUDES 82283 MOTOR AND PARTS MARKED (A) (MOTOR ARRANGEMENT H) USED ON FPR5, FPR21, AND FPR23

TL 55171S

Figure 270. New style synchronous motor unit (86933) parts FPR5, FPR21, and FPR23).

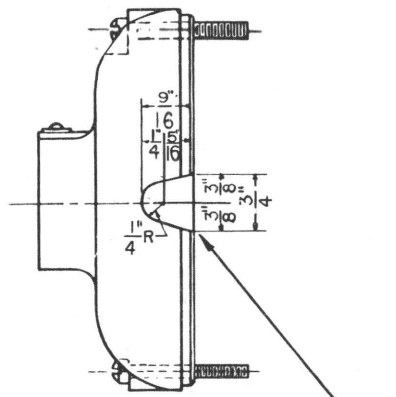

OLD STYLE 82850 END SHIELDS MAY BE WORKED OVER FOR USE WITH NEW STYLE MOTORS BY ADDING WIRE OUTLET HOLE AS ILLUSTRATED.

82850 END SHIELD-HAS BEEN REDESIGNED BUT RETAINS ITS ORIGINAL PART NUMBER. THE NEW STYLE END SHIELD (WITH WIRE OUTLET HOLE) CAN ALSO BE USED ON THE OLD STYLE MOTORS. THE OLD STYLE END SHIELD (WITHOUT WIRE OUTLET HOLE) CANNOT BE USED ON NEW STYLE MOTORS UNLESS IT BE WORKED OVER AS ILLUSTRATED ABOVE.

90263 WOUND STATOR (WITH BASE)—HAS BEEN REDESIGNED BUT RETAINS ITS ORIGINAL PART NUMBER. WHEN REPLACING AN OLD STYLE STATOR (WITH TAPPED HOLES FOR THE END SHIELD CLAMPING STUDS) WITH A NEW STYLE STATOR (WITH BODY HOLES FOR THE END SHIELD BOLTS) THE FOLLOWING NEW STYLE PARTS ARE REQUIRED

90263 WOUND STATOR (WITH BASE)	(1)
82850 END SHIELD (OR WORKED OVER OLD STYLE END SHIELD)	(1)
103431 GROMMET-RUBBER	(1)
102774 BOLT	(2)
W-6104 NUT	(2)

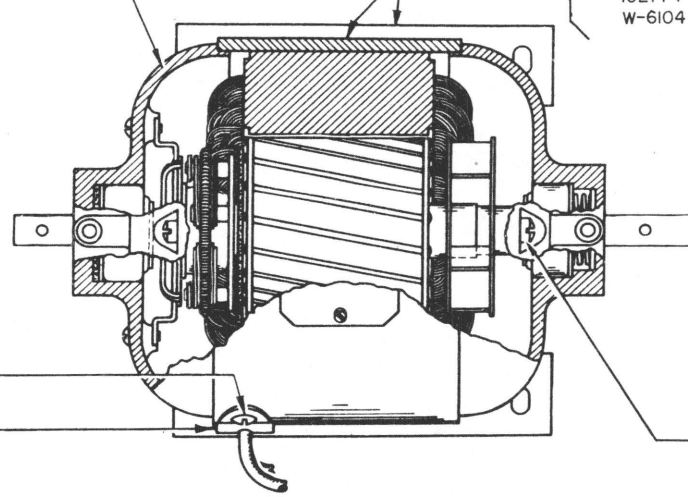

80351 SCREW

80307 OUTLET (WITH 80308 BUSHING-FIBER)

80559 CLAMPING STUD

OLD STYLE SYNCHRONOUS MOTOR

82283 SYNCHRONOUS MOTOR, 1/40 HP, 110 V, 60 CYCLE, AC (GE MODEL 5SH25ABII)

(PARTS NOT LISTED SAME AS ON NEW STYLE MOTOR)

USED ON FPR5, FPR21, AND FPR23

TL551725

Figure 271. Old style synchronous motor (82283) parts FPR5, FPR21, and FPR23).

807975 O - 48 - 19

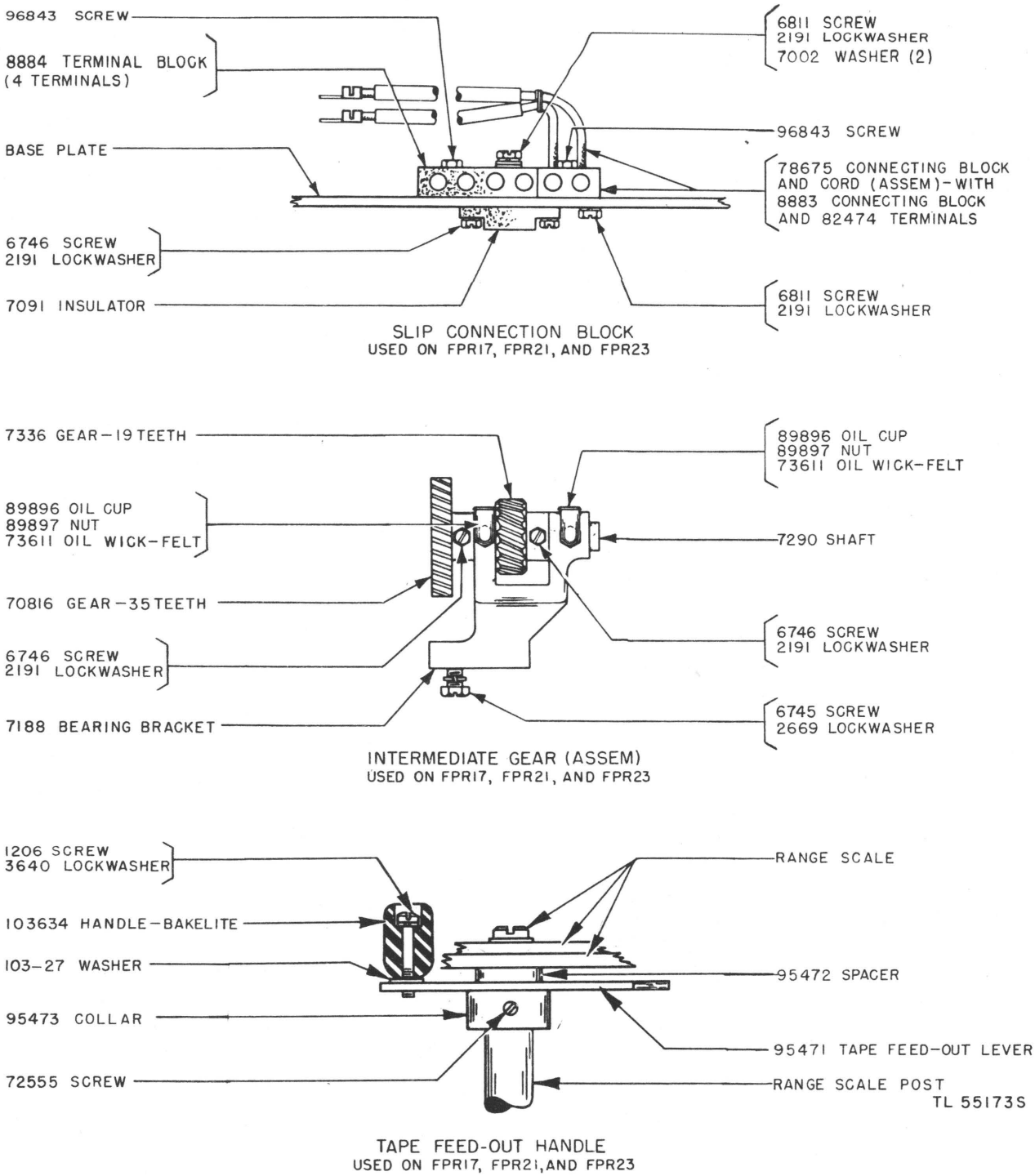

Figure 272. Slip connection block, intermediate gear, and tape feed-out handle parts (FPR17, FPR21, and FPR23).

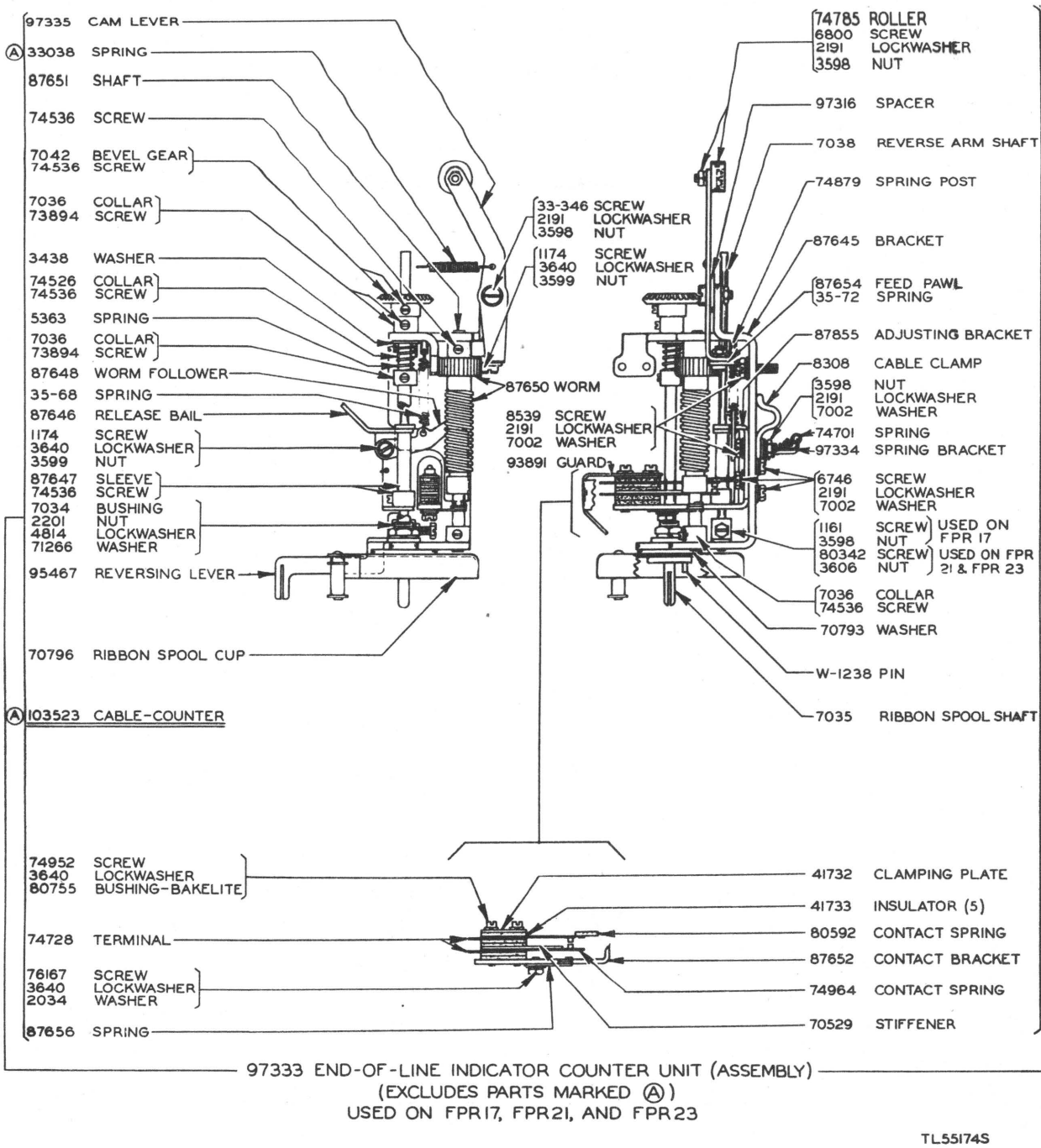

Figure 273. End-of-line indicator counter unit parts (FPR17, FPR21, and FPR23).

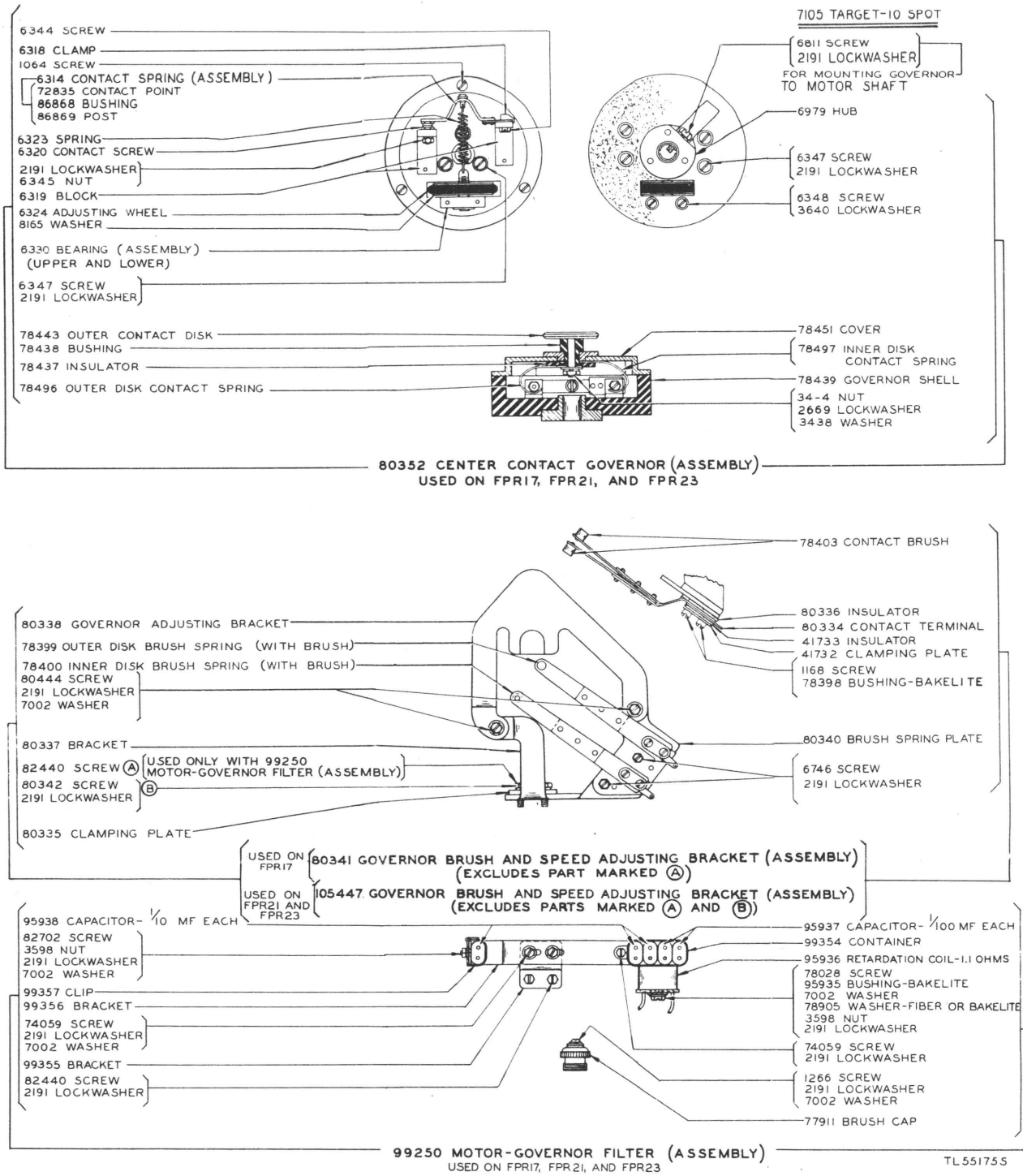

Figure 274. Center contact governor, governor brush and speed adjusting bracket, and motor-governor filter parts (FPR17, FPR21, and FPR23).

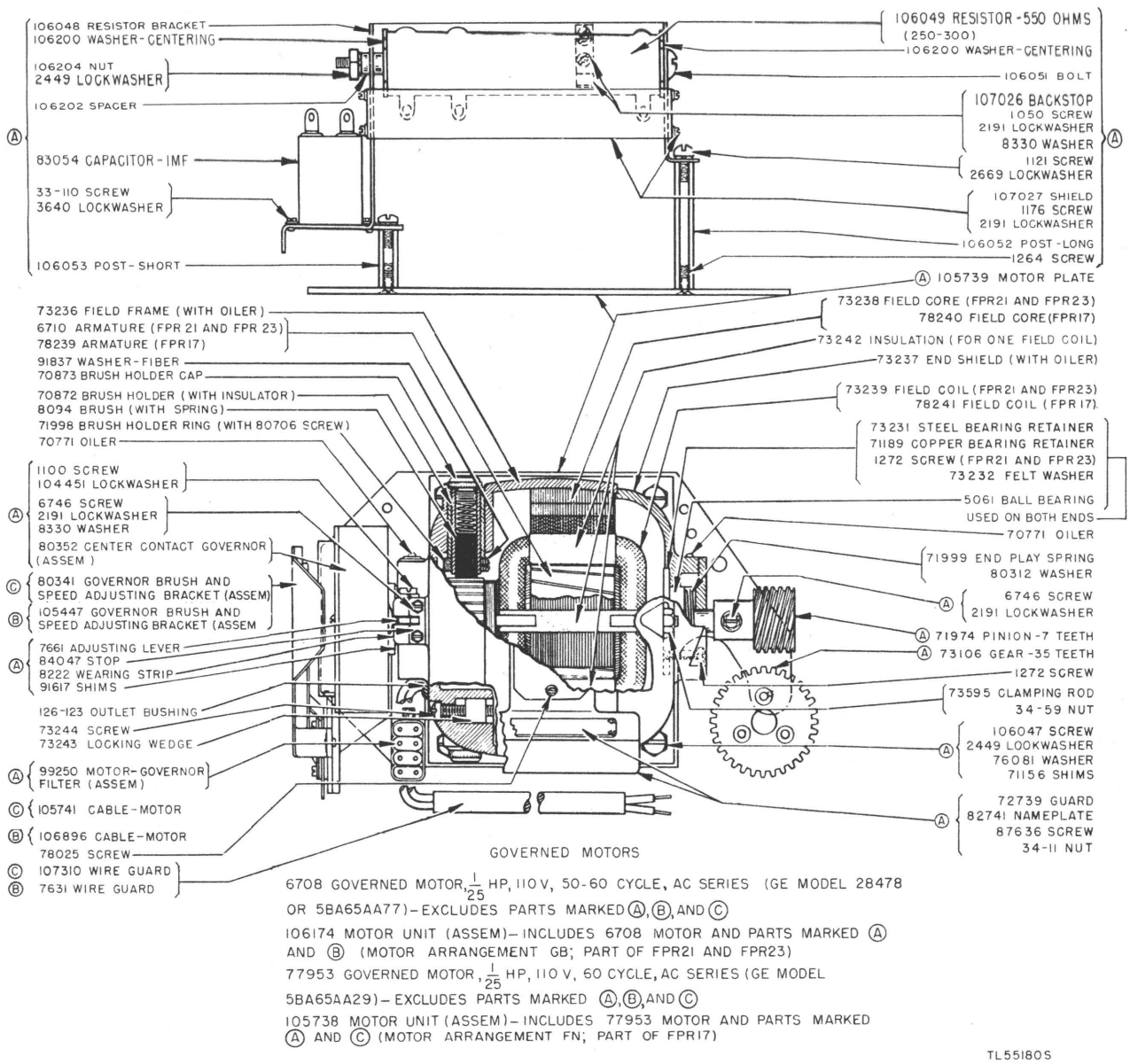

GOVERNED MOTORS

6708 GOVERNED MOTOR, $\frac{1}{25}$ HP, 110 V, 50-60 CYCLE, AC SERIES (GE MODEL 28478 OR 5BA65AA77)–EXCLUDES PARTS MARKED Ⓐ, Ⓑ, AND Ⓒ

106174 MOTOR UNIT (ASSEM)–INCLUDES 6708 MOTOR AND PARTS MARKED Ⓐ AND Ⓑ (MOTOR ARRANGEMENT GB; PART OF FPR21 AND FPR23)

77953 GOVERNED MOTOR, $\frac{1}{25}$ HP, 110 V, 60 CYCLE, AC SERIES (GE MODEL 5BA65AA29)–EXCLUDES PARTS MARKED Ⓐ, Ⓑ, AND Ⓒ

105738 MOTOR UNIT (ASSEM)–INCLUDES 77953 MOTOR AND PARTS MARKED Ⓐ AND Ⓒ (MOTOR ARRANGEMENT FN; PART OF FPR17)

TL55180S

Figure 275. Governed series motor units (106174 and 105738) parts (FPR17, FPR21, and FPR23).

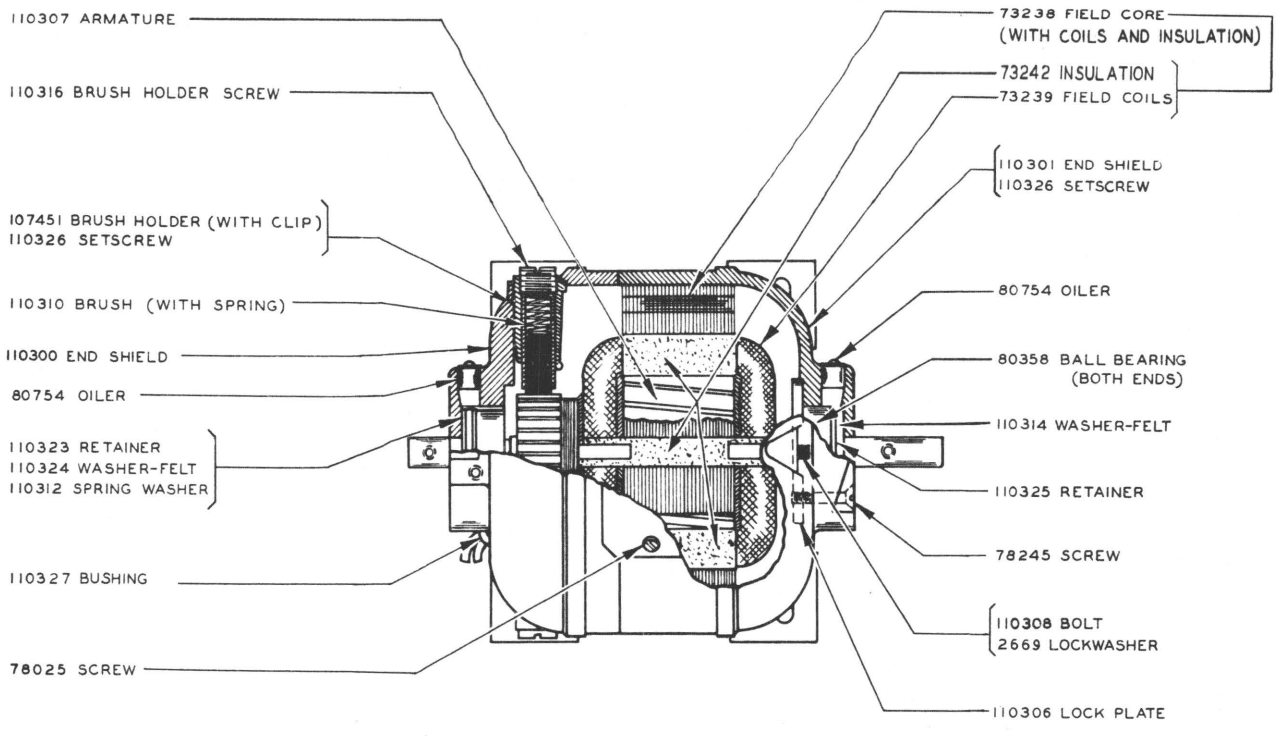

107151 MOTOR, 1/25 HP 115V, 50-60 CYCLE, AC SERIES(ELECTRIC SPRAYIT MODEL S-9058)
THIS MOTOR MAY BE FURNISHED AS AN ALTERNATE FOR 6708 MOTOR.

TL 54469SA

Figure 276. Governed series motor (107151) parts (FPR21 and FPR23).

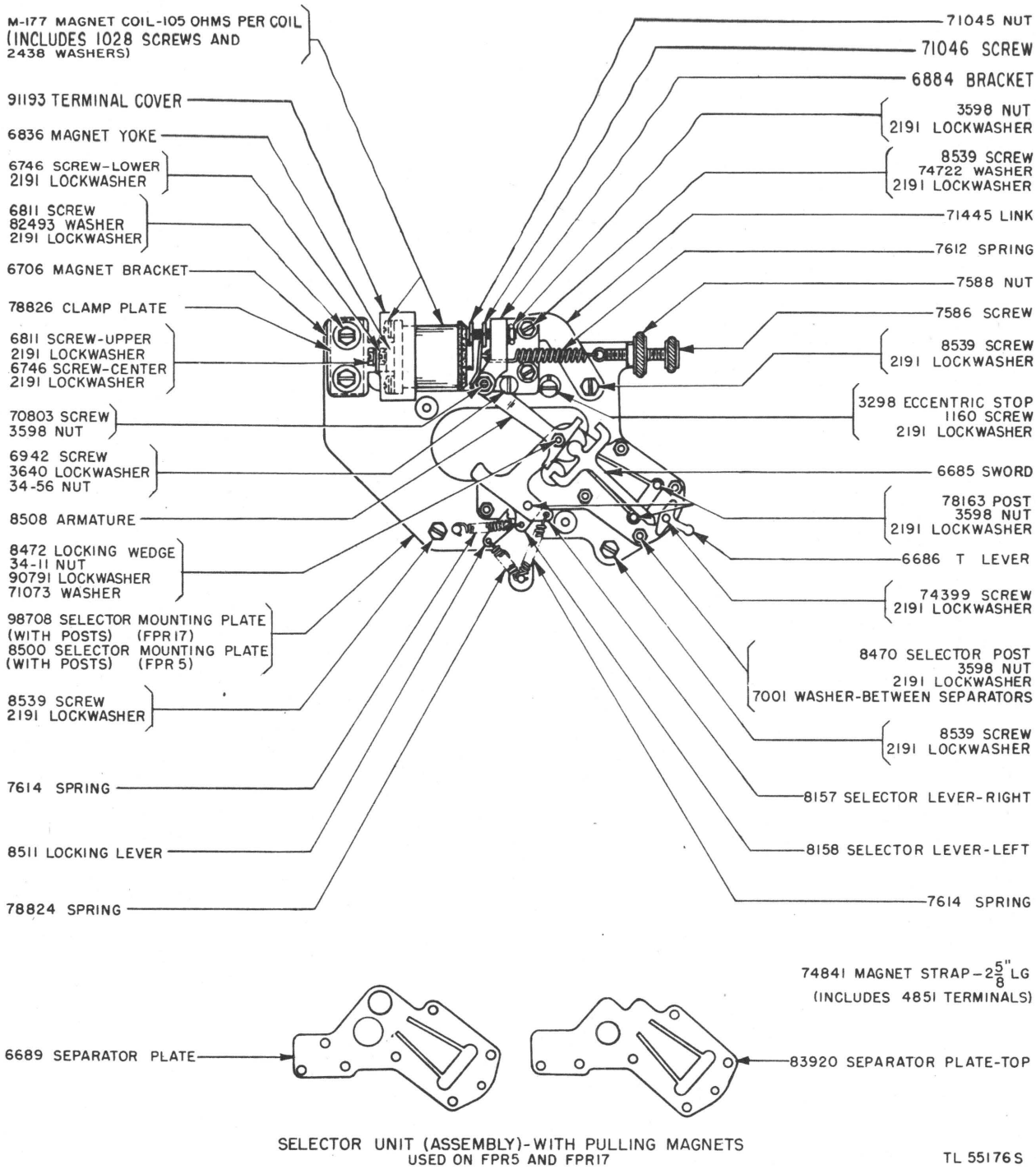

Figure 277. Selector unit (with pulling magnets) parts (FPR5 and FPR17).

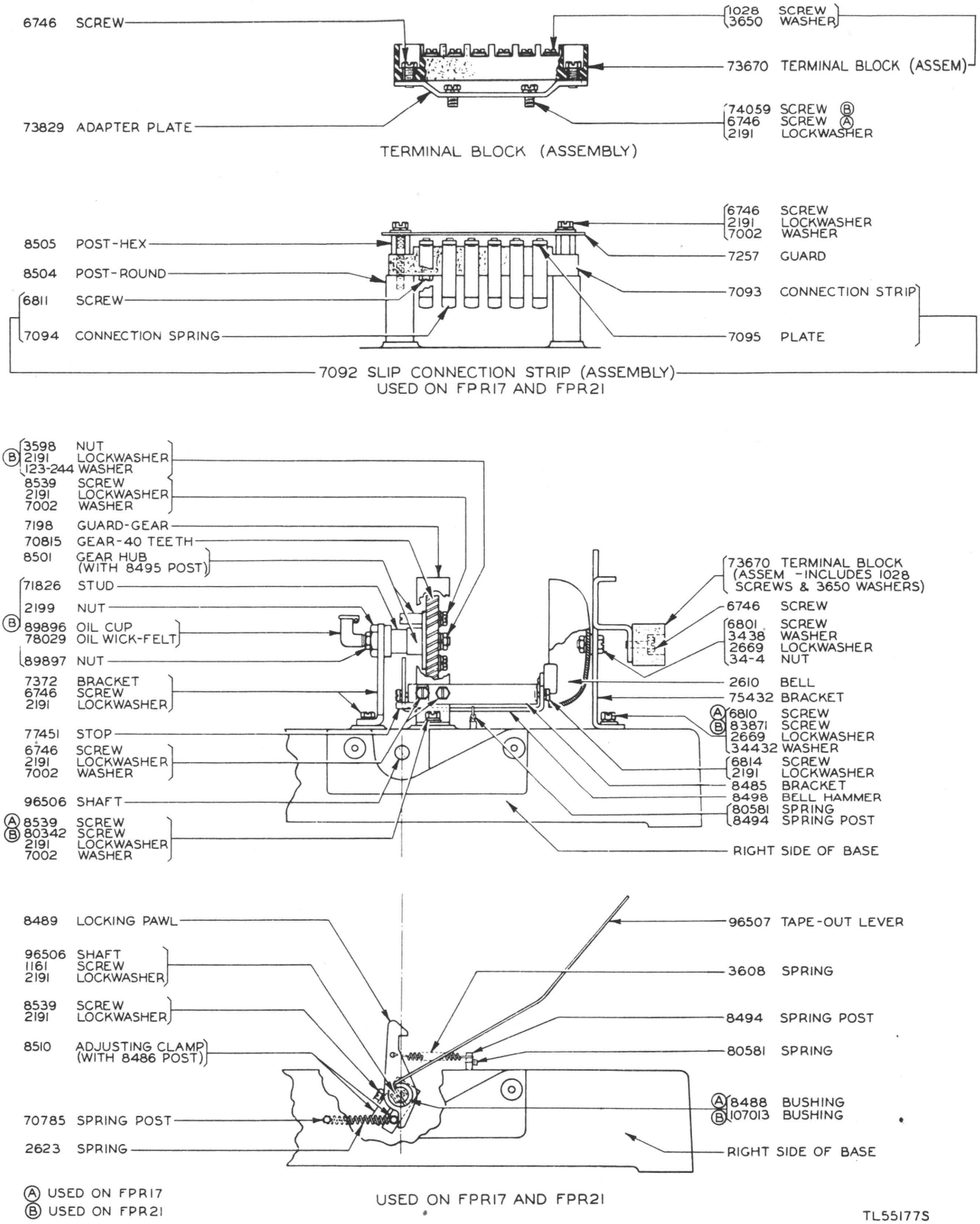

Figure 278. Terminal block, slip connection strip, and tape-out alarm mechanism parts (FPR17 and FPR21).

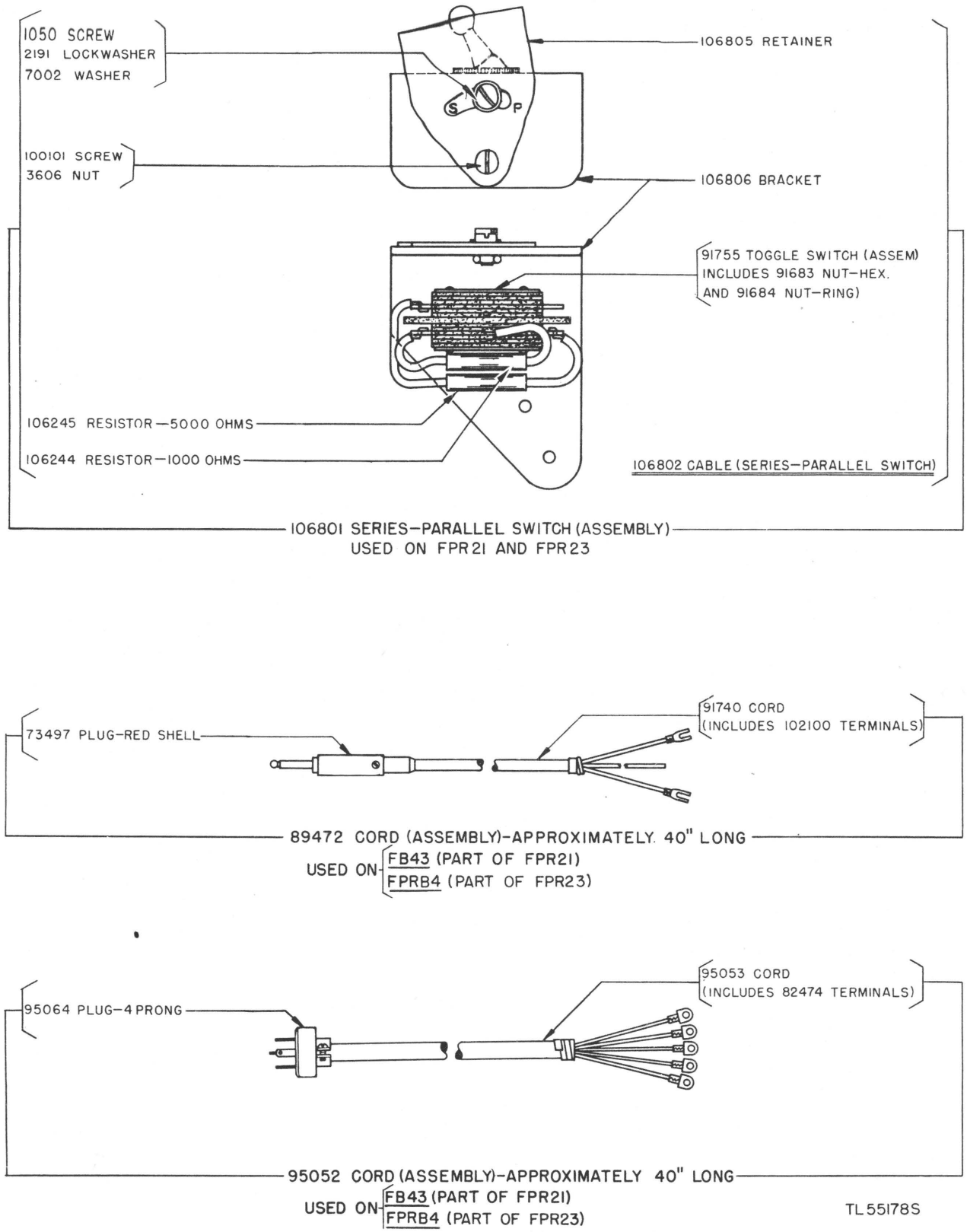

Figure 279. Series-parallel switch and cord parts (FPR21 and FPR23).

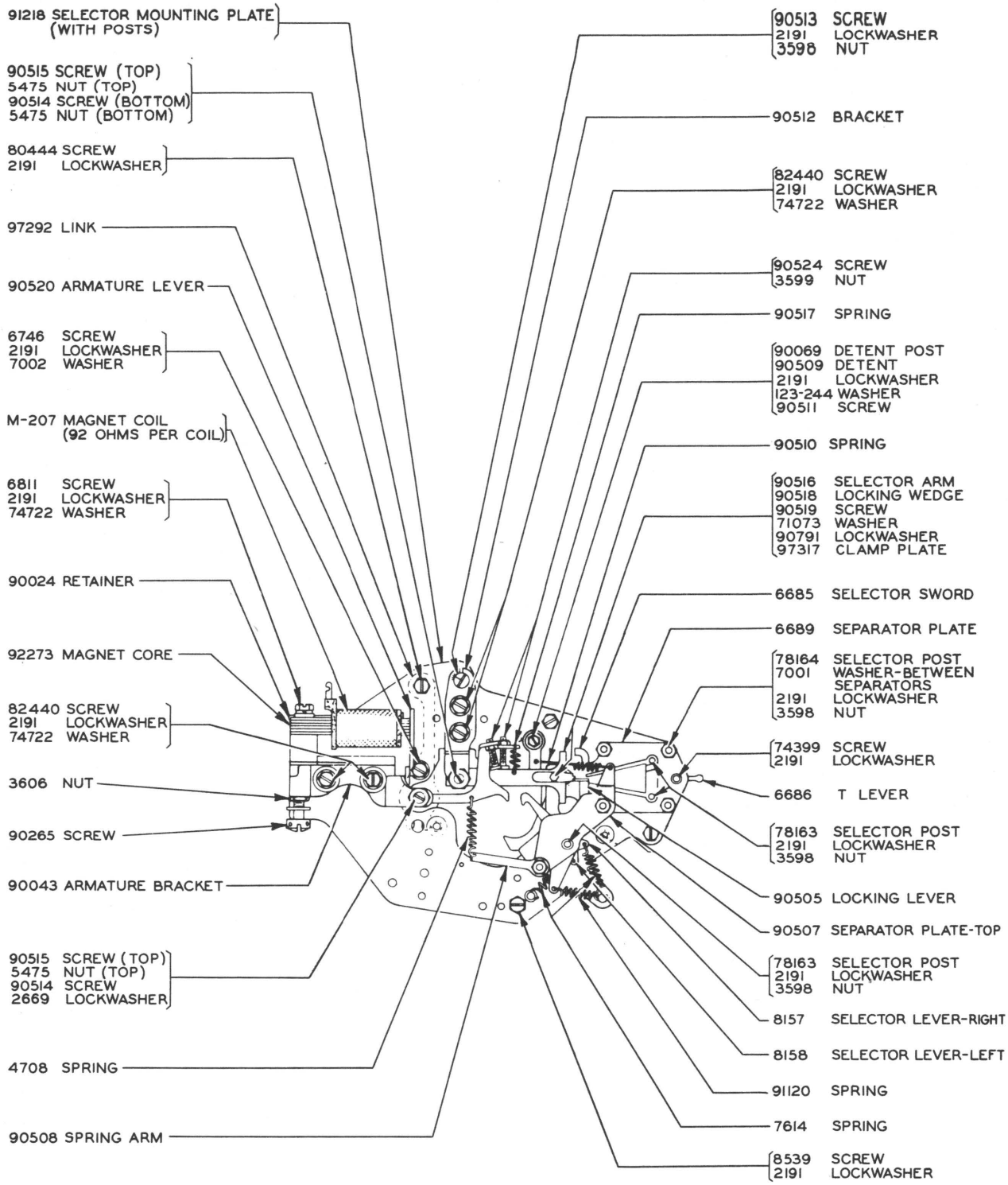

SELECTOR UNIT (ASSEMBLY)-WITH HOLDING MAGNETS
USED ON FPR21 AND FPR23

TL55179S

Figure 280. Selector unit (with holding magnets) parts (FPR21 and FPR23).

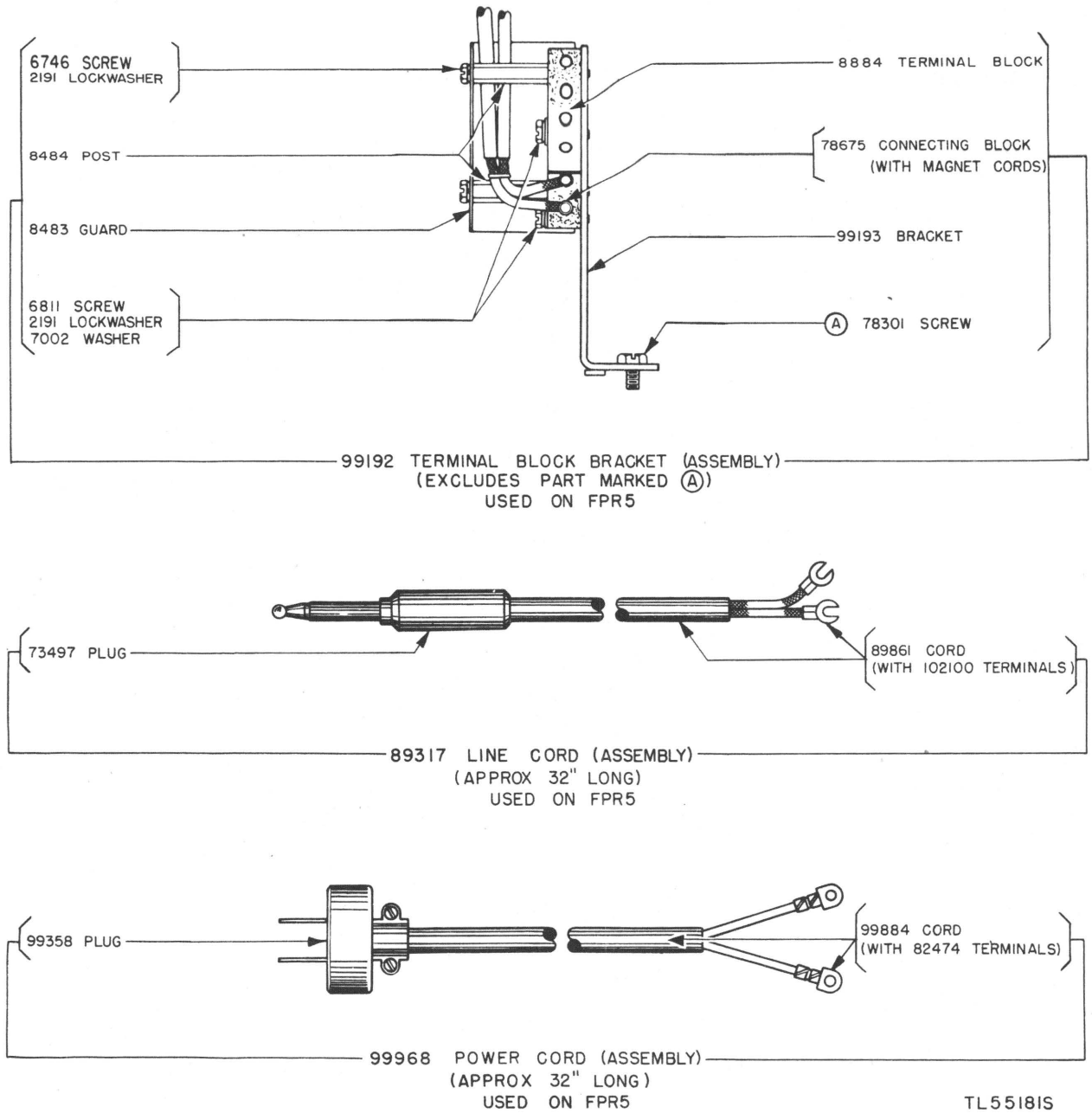

Figure 281. Terminal-block **bracket** *and cord parts (FPR5).*

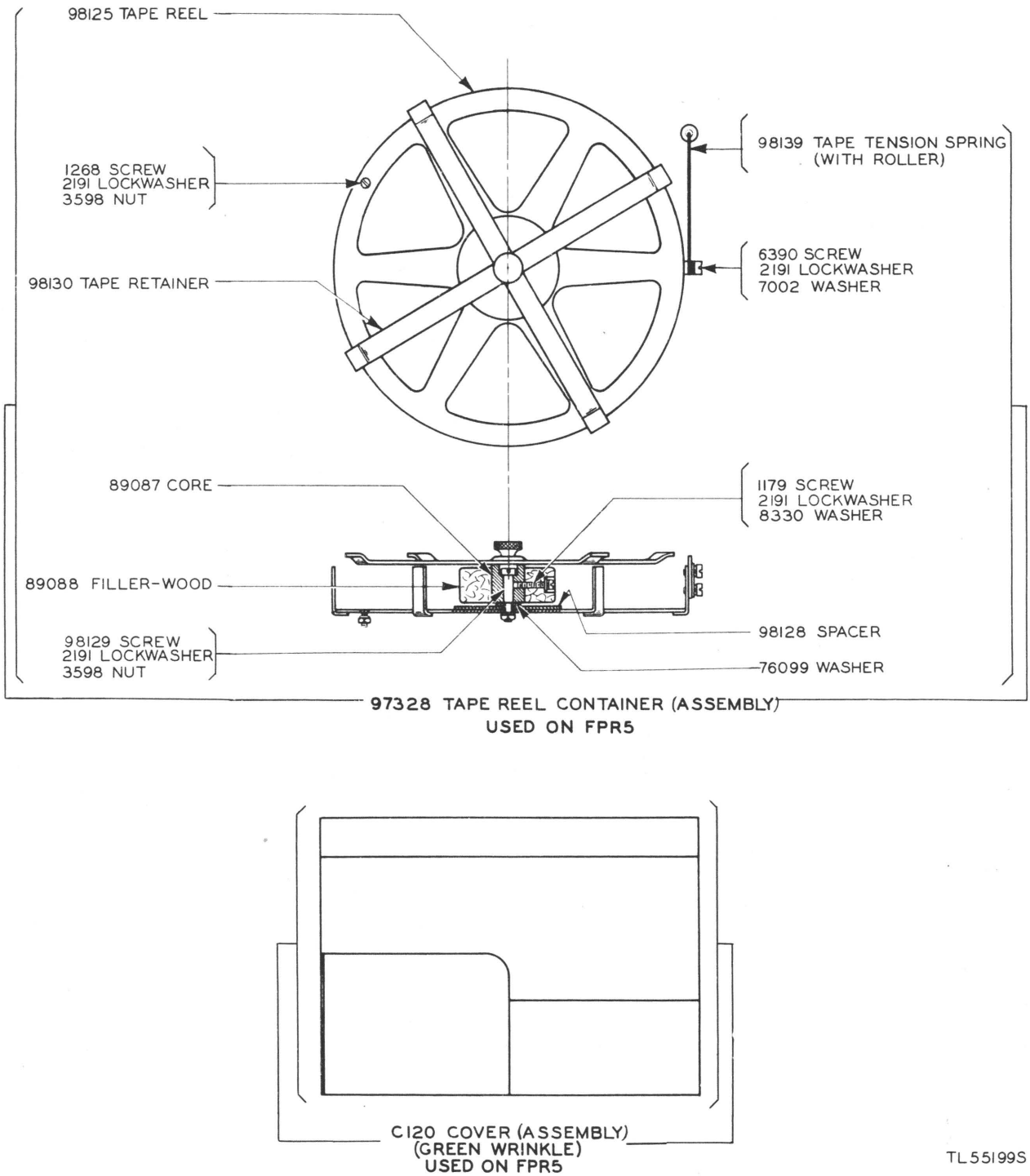

Figure 282. Tape-reel container and cover parts (FPR5).

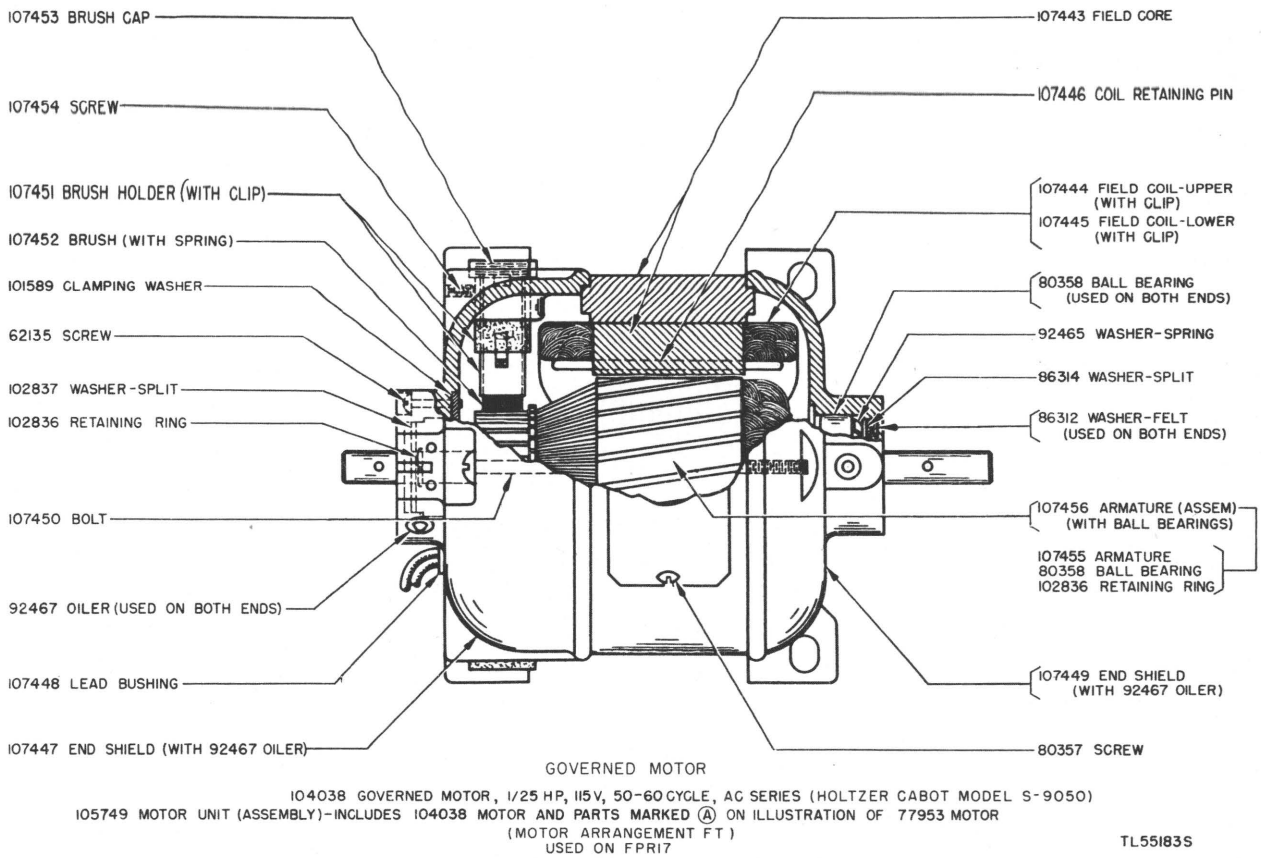

Figure 283. Governed series motor unit (105749) parts (FPR17).

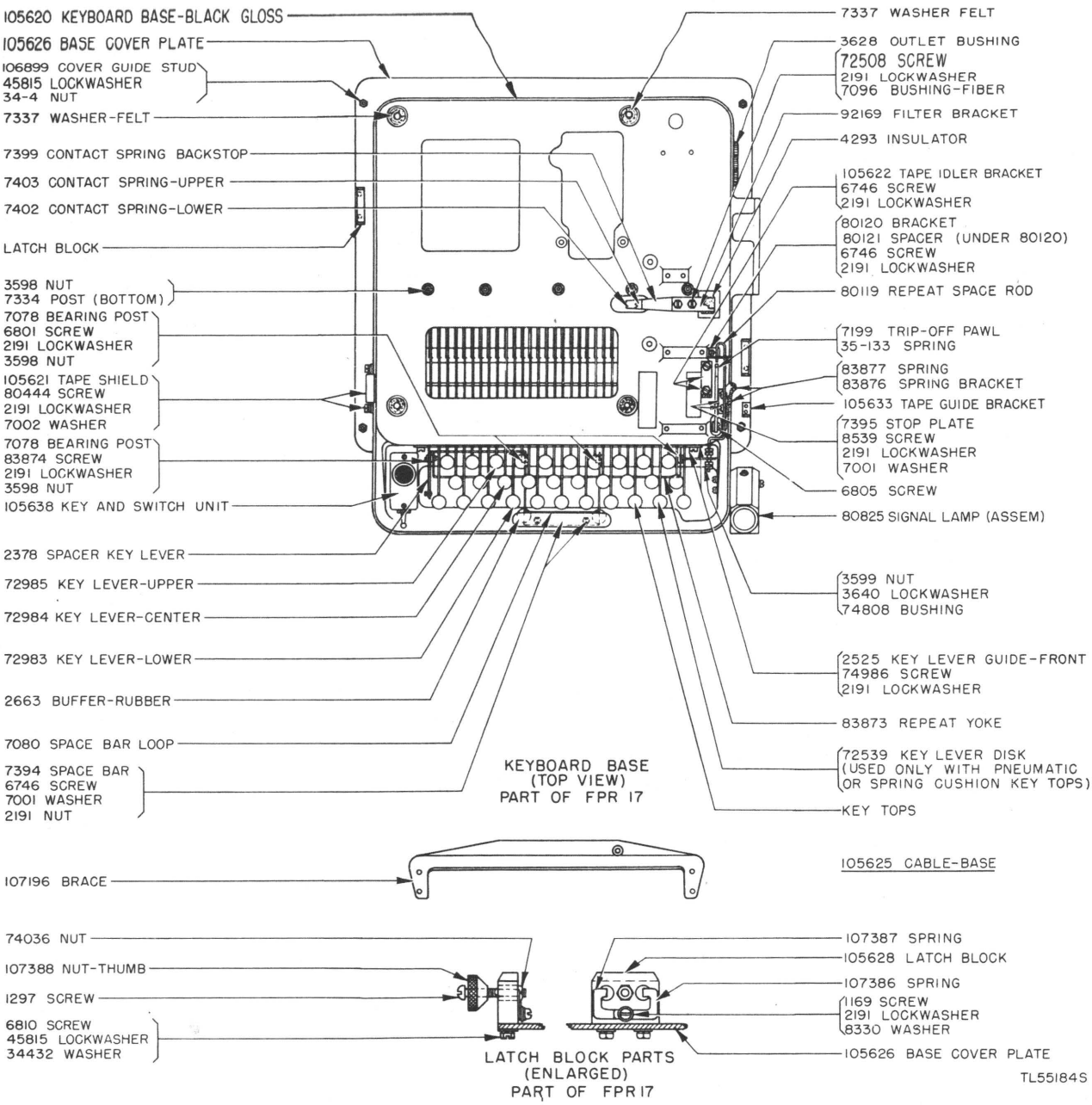

Figure 284. Keyboard base and latch block parts (FPR17).

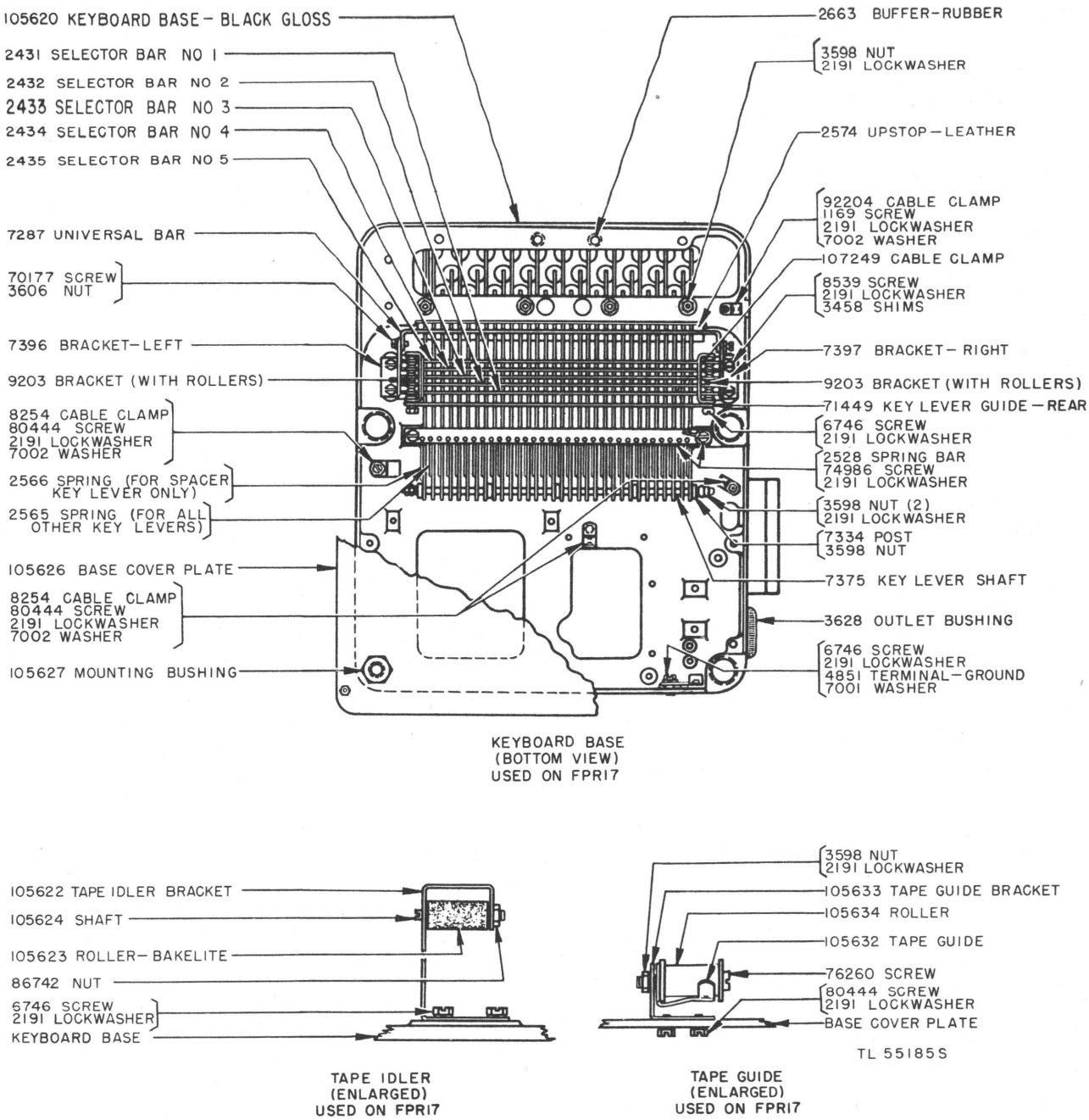

Figure 285. Keyboard base, tape idler, and tape-guide parts (FPR17).

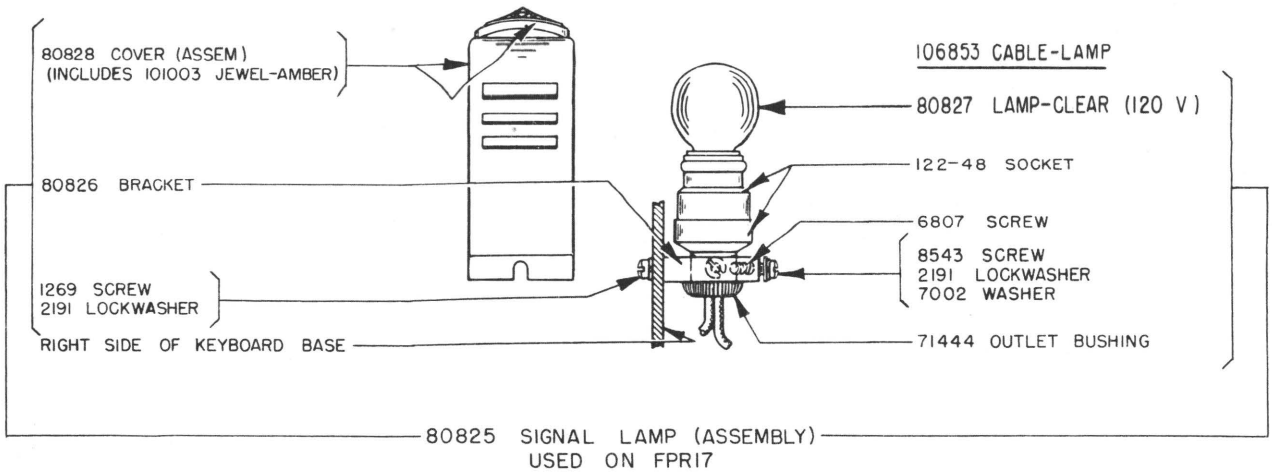

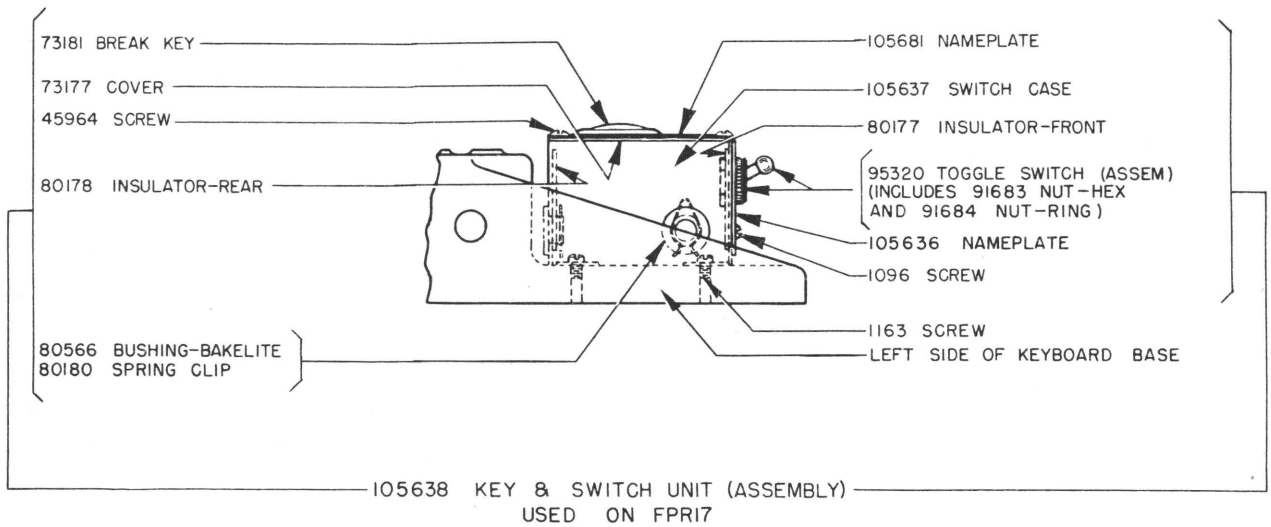

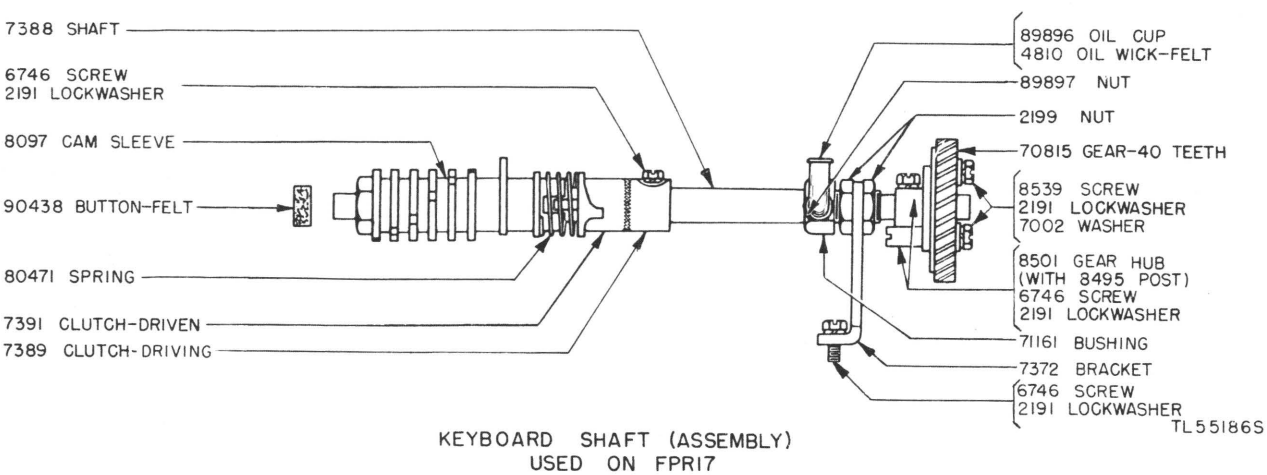

Figure 286. Signal lamp, key and switch unit, and keyboard shaft parts (FPR17).

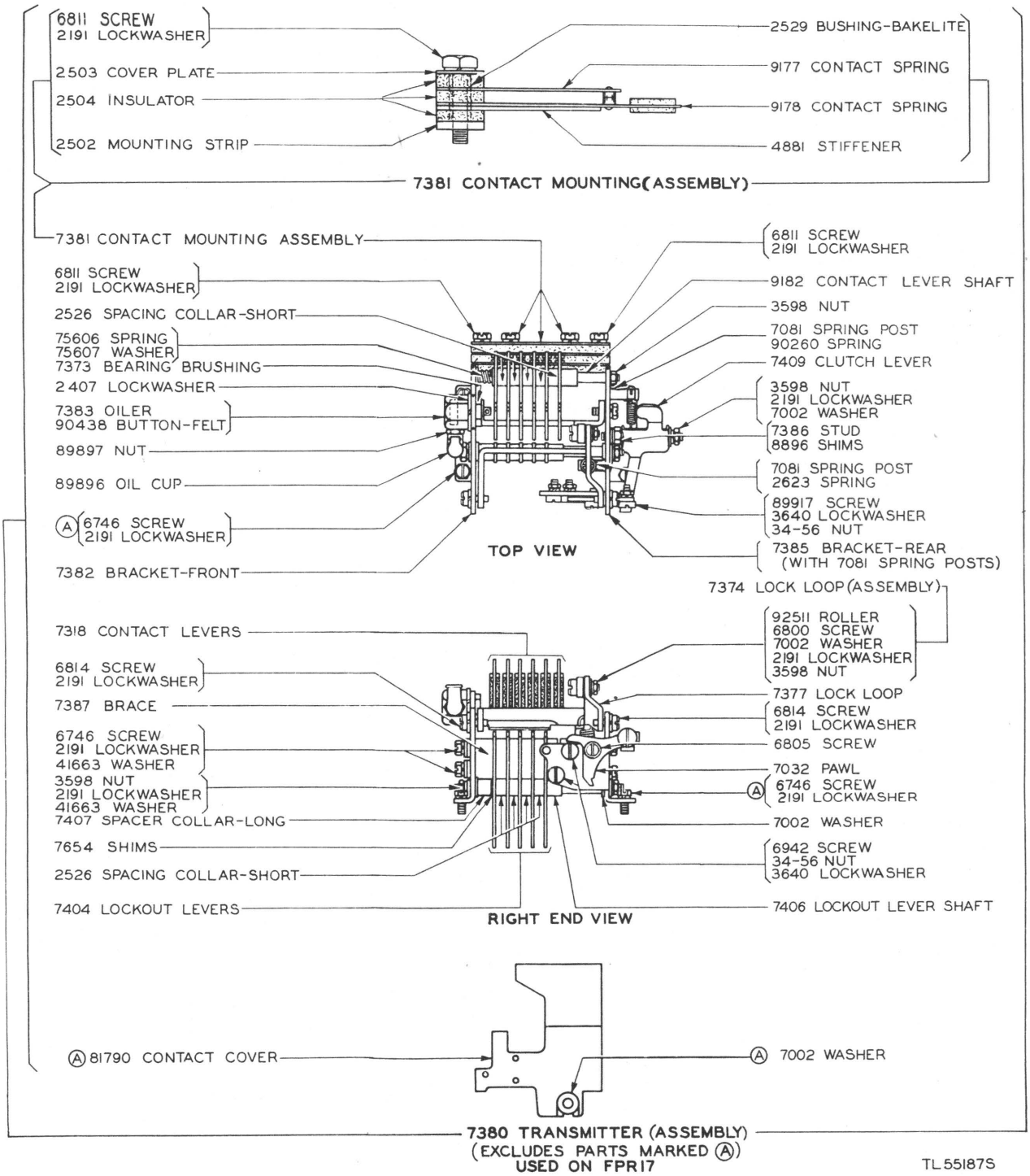

Figure 287. Transmitter parts (FPR17).

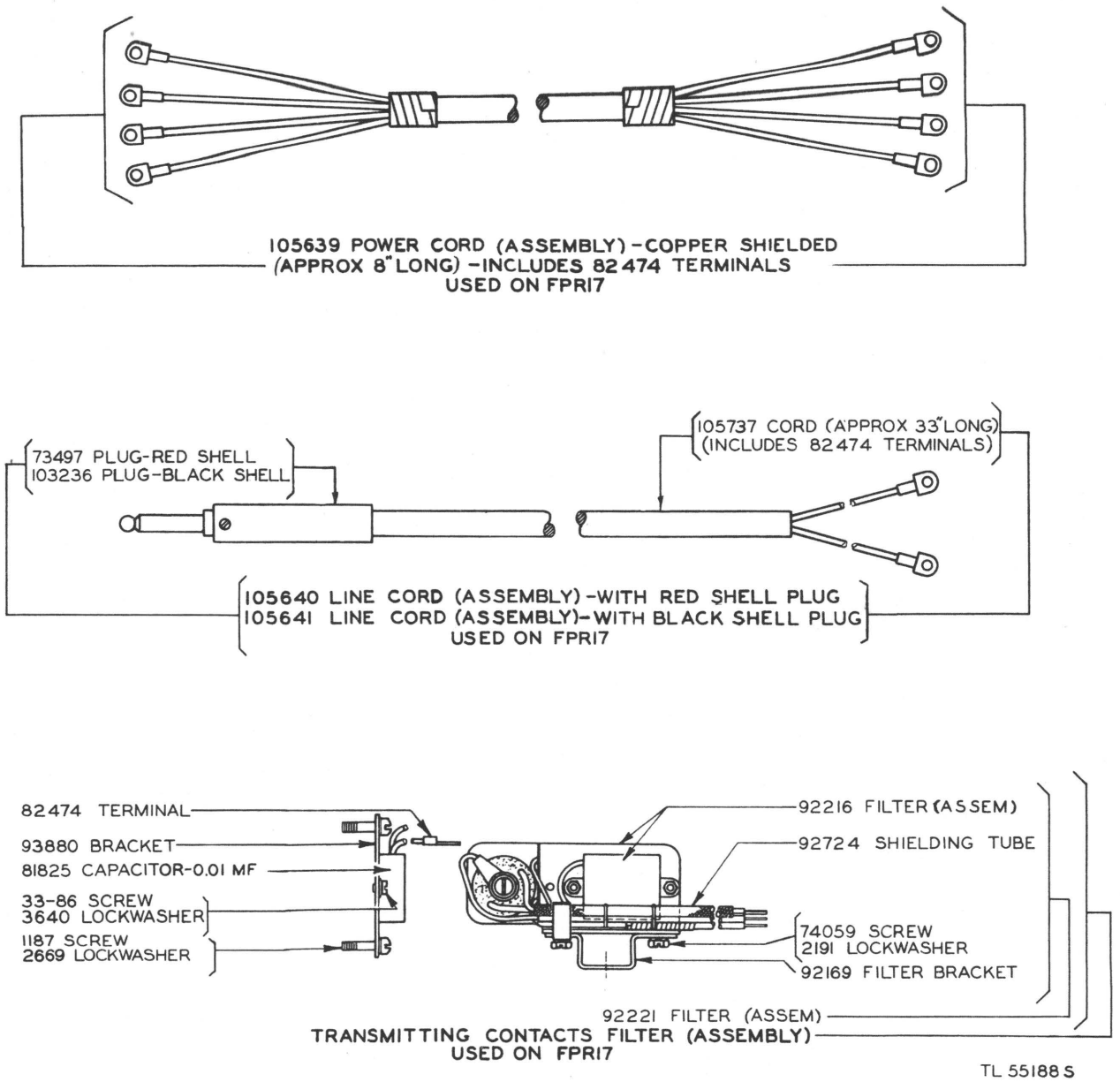

Figure 288. Cord transmitting-contacts filter and parts (FPR17).

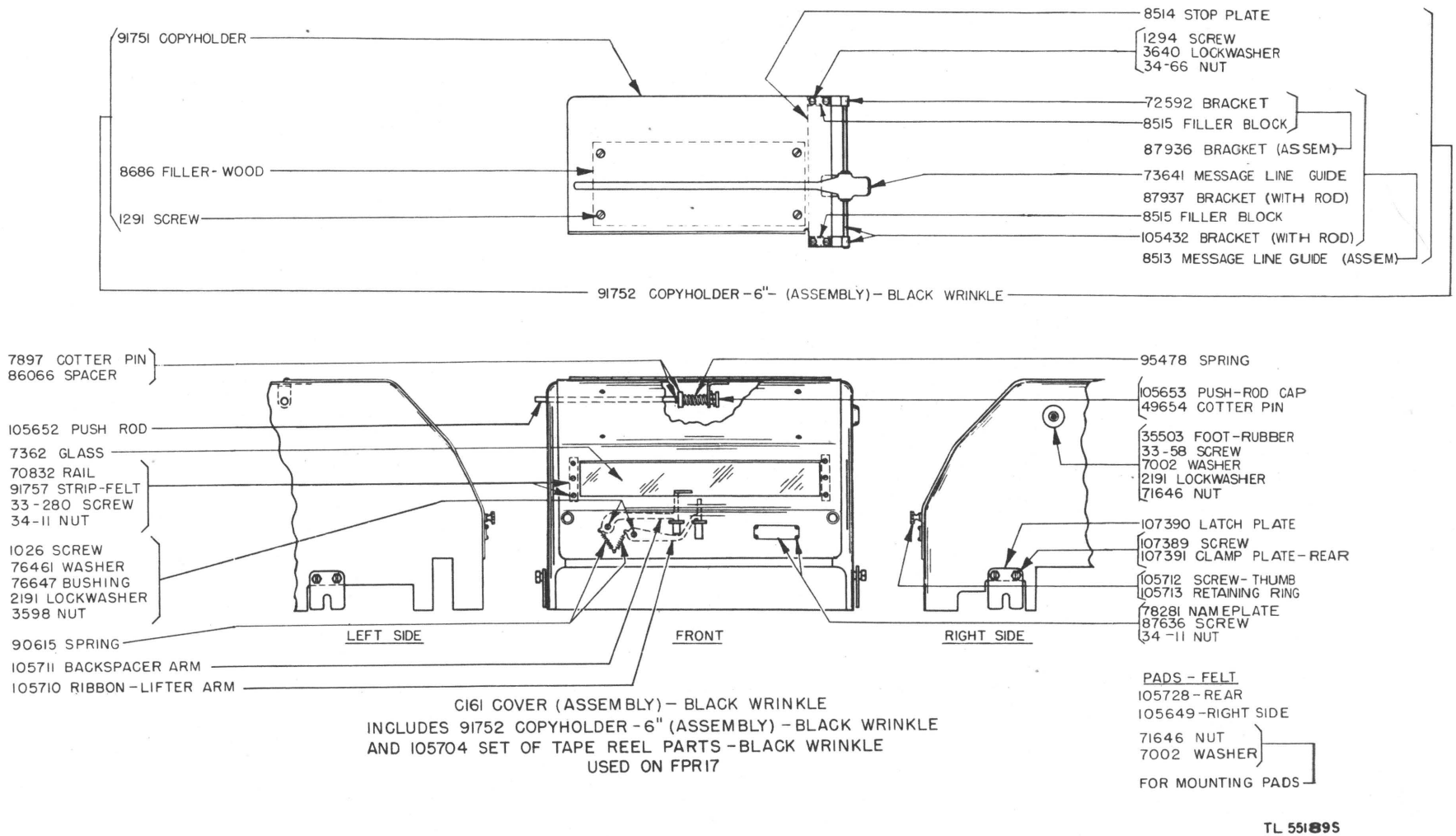

Figure 289. Copyholder and cover parts (FPR17).

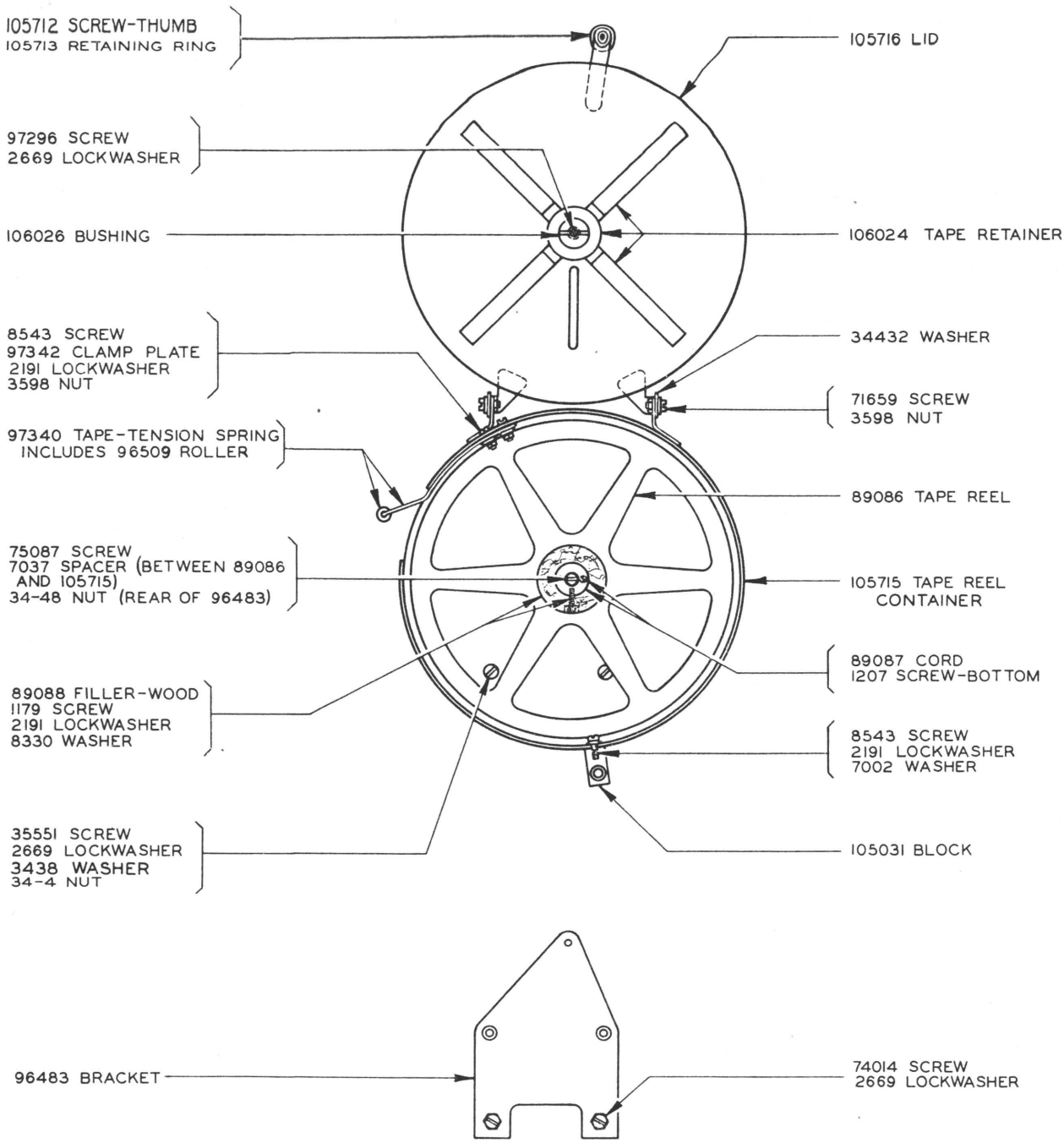

Figure 290. Tape-reel parts (FPR17).

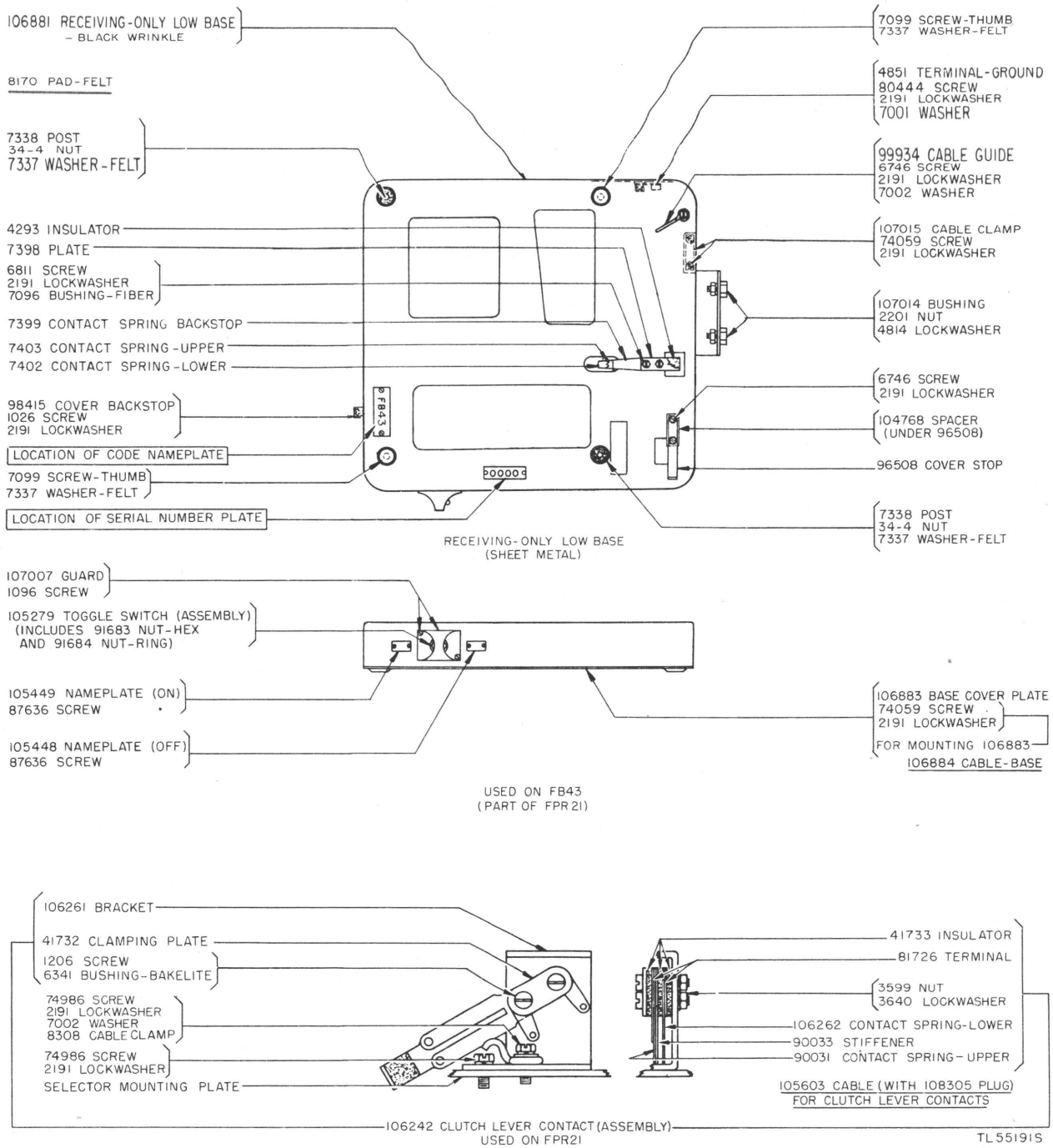

Figure 291. Receiving-only low base and clutch-lever contact parts (FPR21).

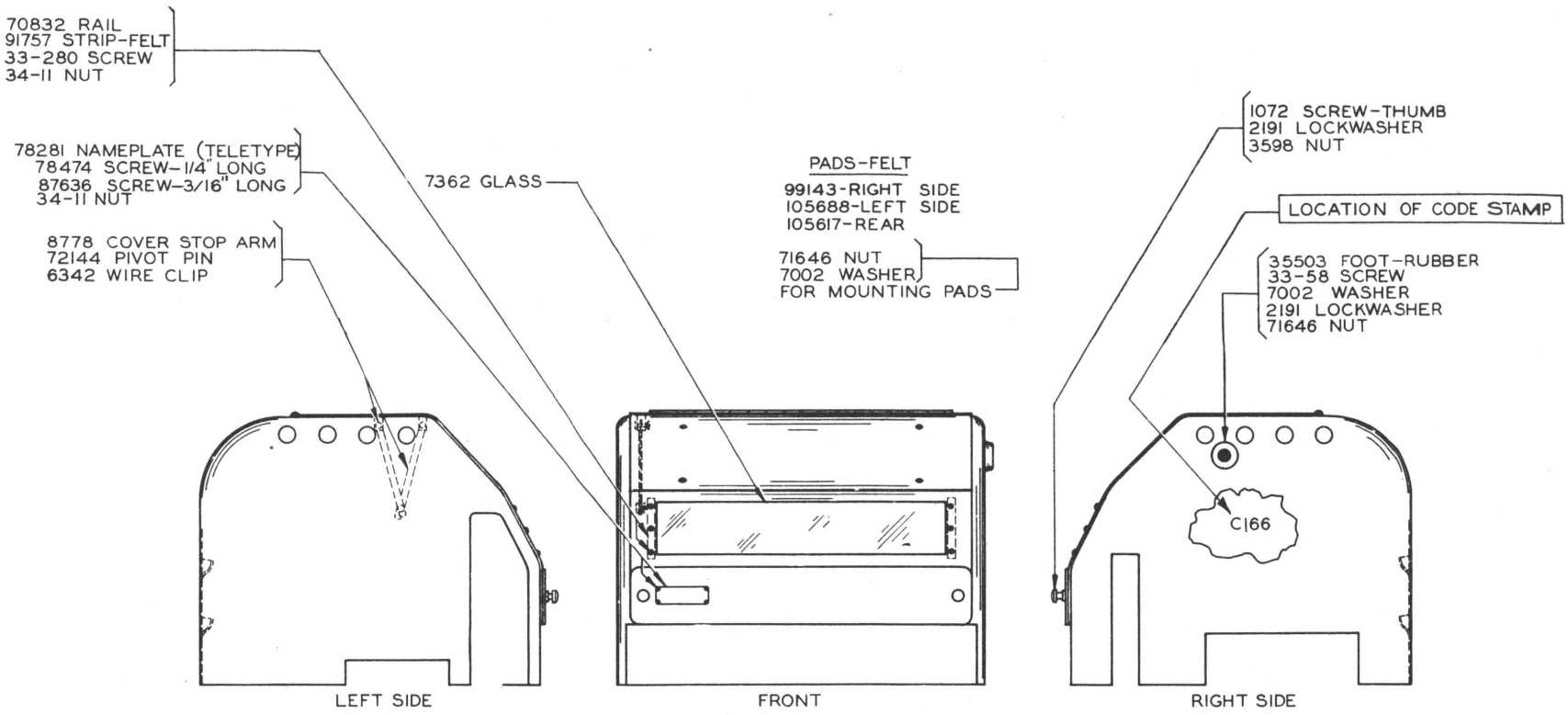

Figure 292. Cover parts (FPR21).

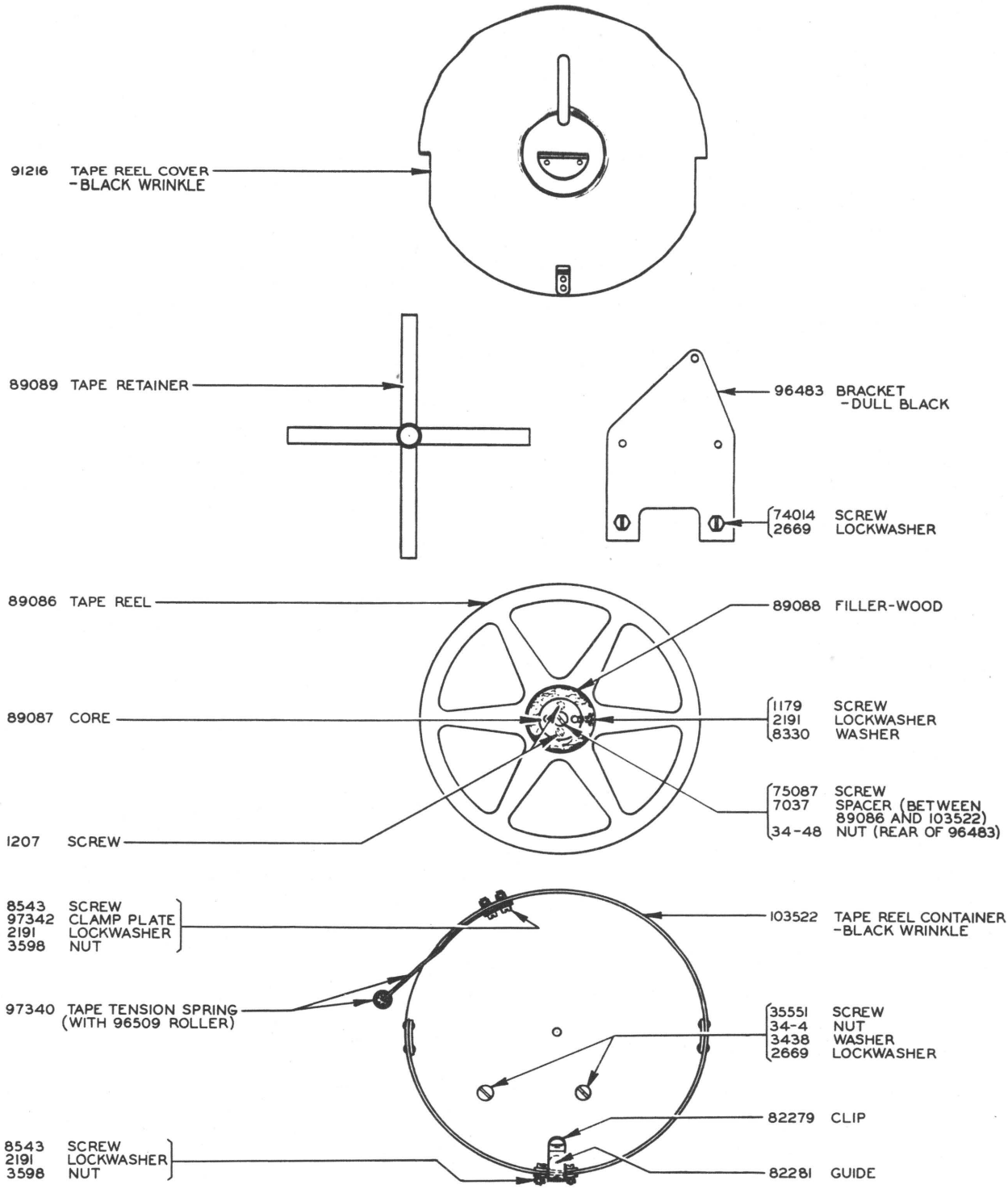

Figure 293. Tape-reel parts (FPR21)

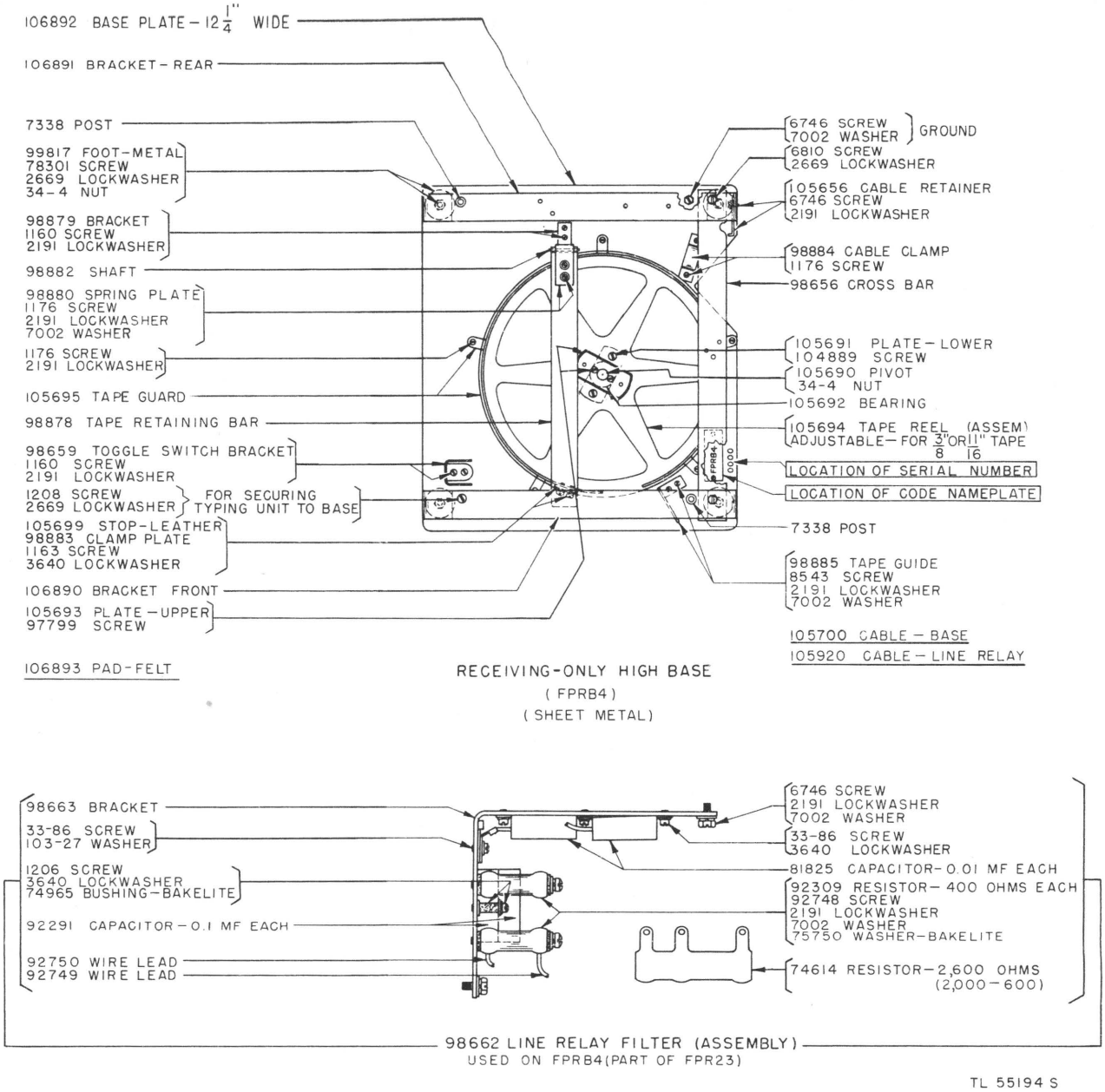

Figure 294. Receiving-only high base and line-relay filter parts (FPR23).

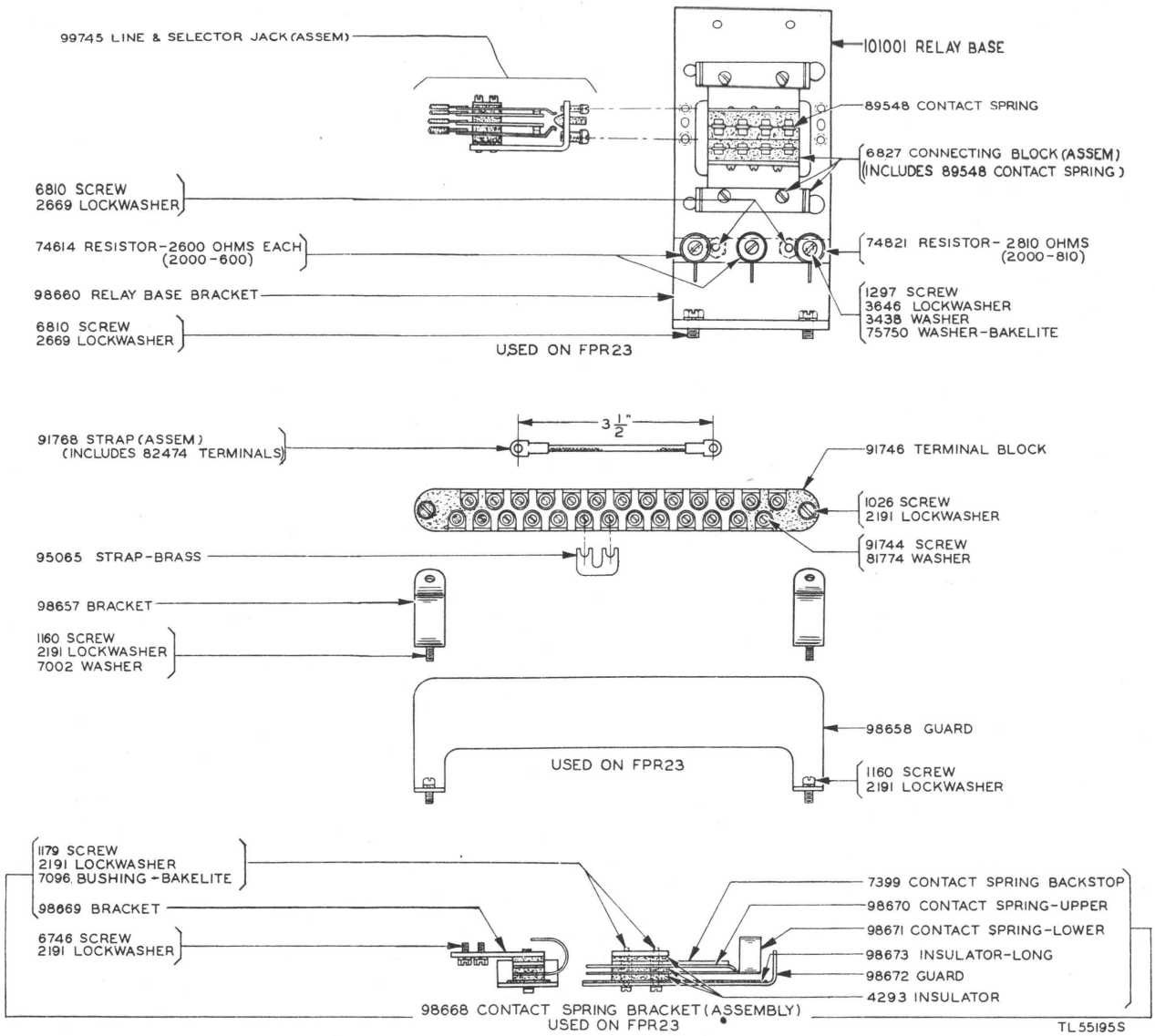

Figure 295. Relay base, terminal block, and contact-spring bracket parts (FPR23).

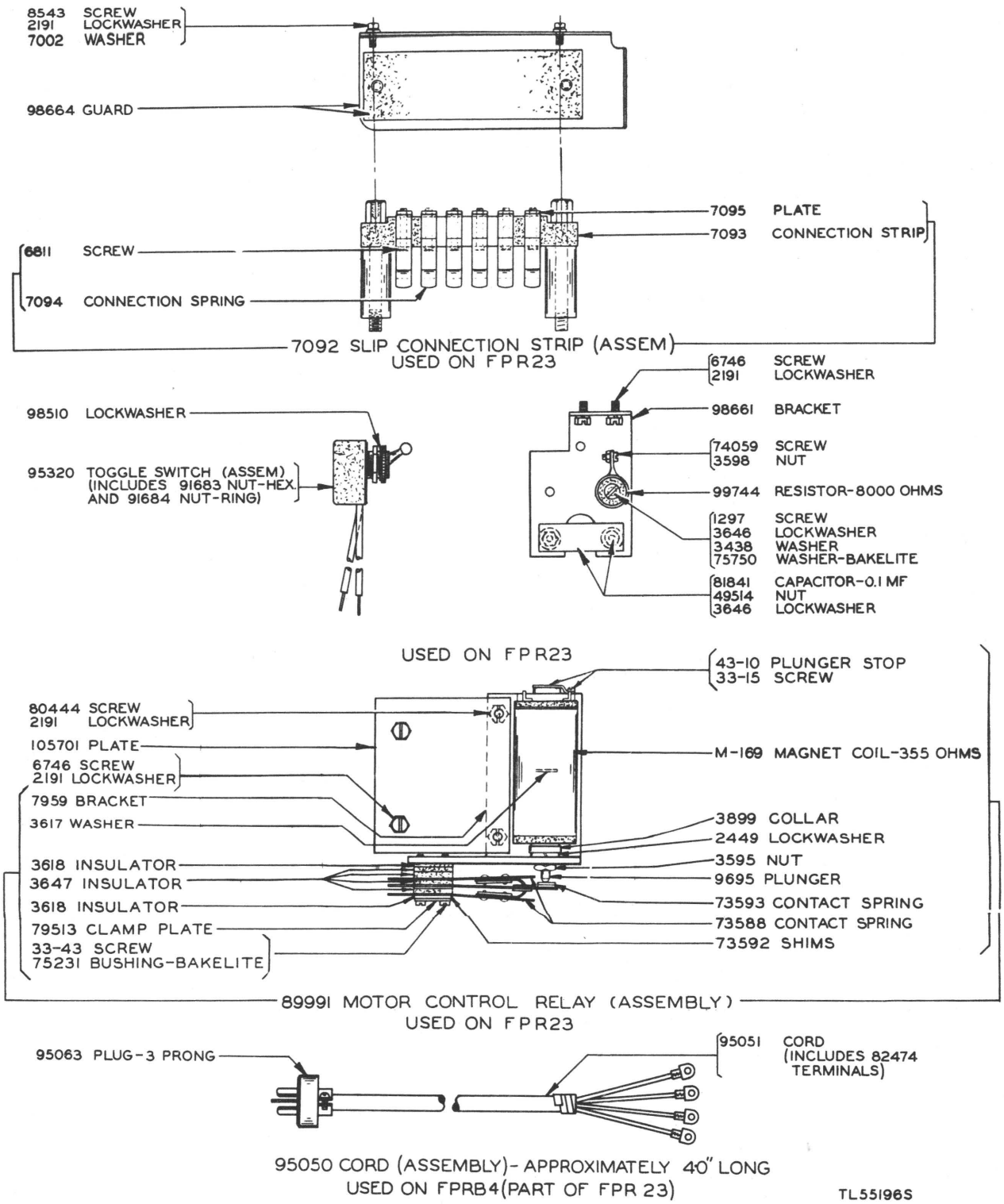

Figure 296. Slip connection strip, toggle switch, resistor and capacitor bracket, motor-control relay, and cord parts (FPR23).

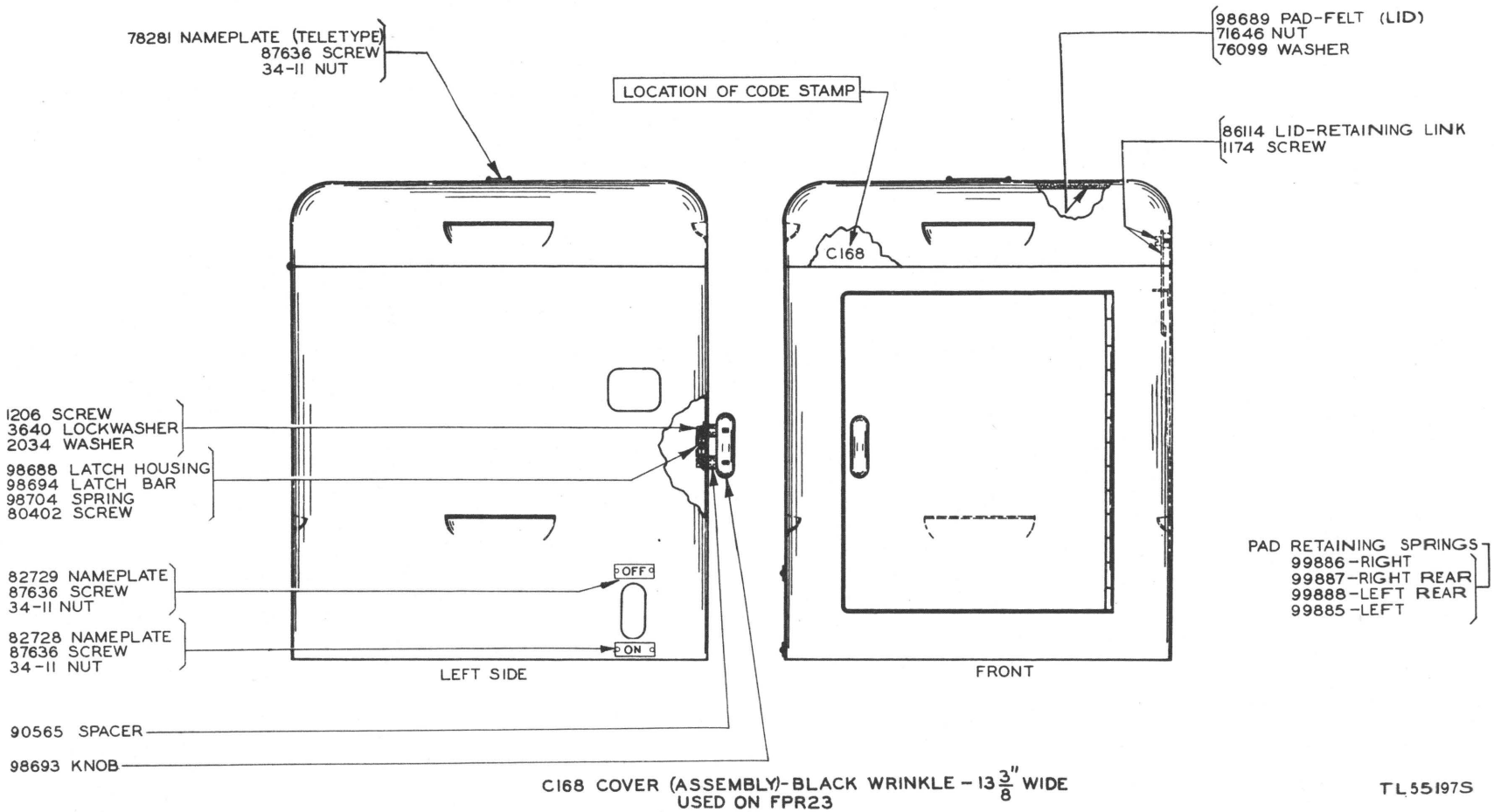

Figure 297. Cover parts (FPR23).

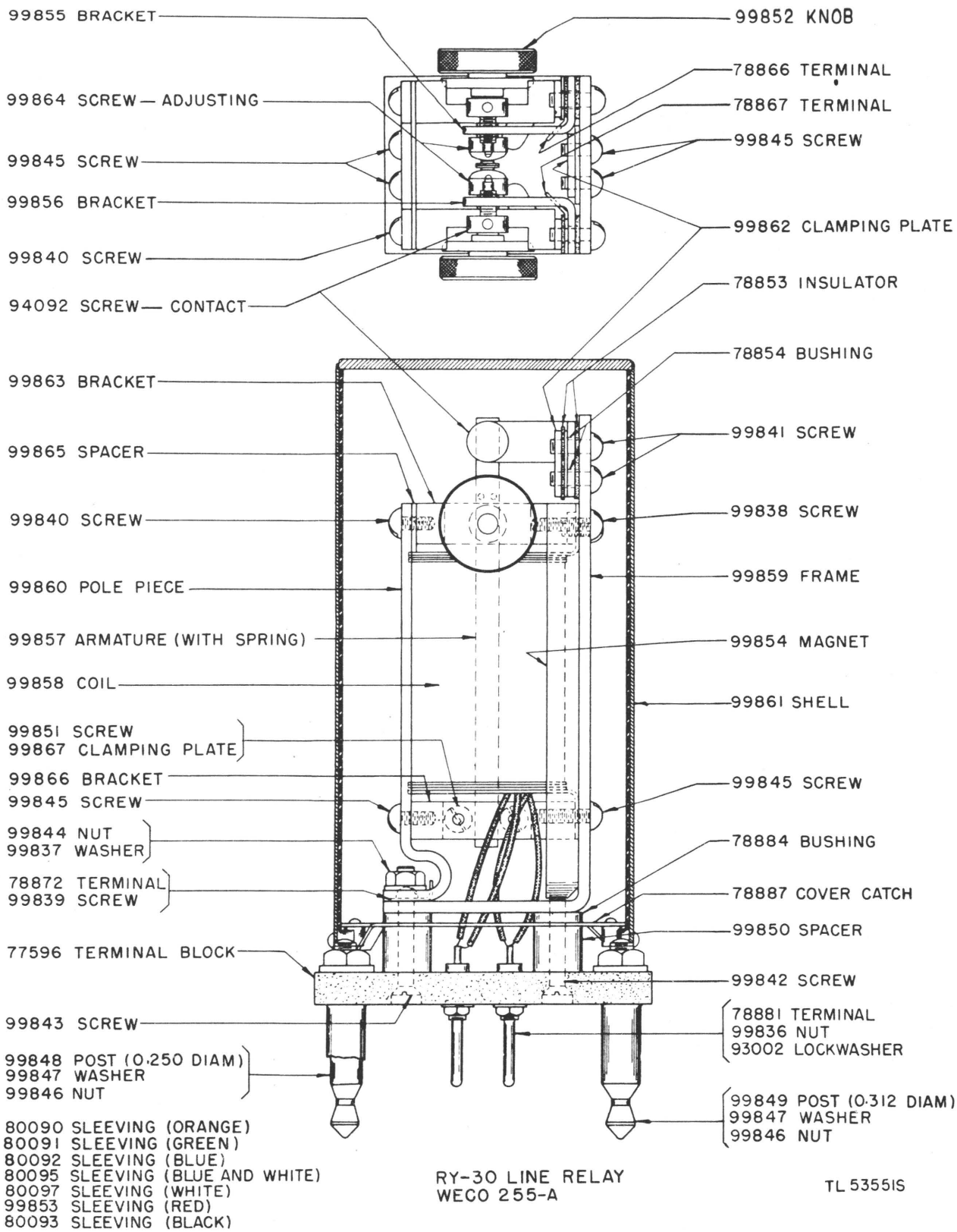

Figure 298. RY–30 line relay (WECo No. 255-A) parts (FPR23).

APPENDIX II

1. Identification Table of Replaceable Parts for Model 14 Typing and Nontyping Reperforators

a. The following information was compiled 18 December 1945. The appropriate pamphlets of the War Department Supply Catalog for typing and nontyping reperforators (Teletype Corp model 14) are:

Higher Echelon Spare Parts

SIG 8–TT–14–RPFT

SIG 8-TT–14–RPFN

Fixed Plant Maintenance Lists

SIG 10–850, Typing Reperforator-Reperforating Unit (FPR 1, 5, 11, 13, 14, 15, 16, 21, 23)

SIG 10–851, Non-Typing Reperforator Unit

b. For an index of available catalog pamphlets, see War Department Supply Catalog SIG 1 and 2.

Note. The following list covers first, second, and third echelon maintenance parts for the FPR17 typing reperforator and the RPE26 nontyping reperforator and station stock maintenance parts for the FPR5, FPR21, and FPR23 typing reperforators and the RPE26 nontyping reperforator. Reference symbols are manufacturer's part numbers.

Ref. symbol	Fig. location	Name of part and description	Signal Corps stock No.
		Maintenance parts common to typing reperforators FPR5, FPR17, FPR21, and FPR23	
6966	268	ECCENTRIC	4T6966
6971	266	LEVER, clutch	4T6971
34-11	270, 275, 277, 289, 292, 297	NUT, hexagon, 2–56	4T34-11
34-56	262, 268, 277, 287	NUT, hexagon, 4–40	4T34-56
3599	261, 262, 263, 273, 280, 284 291	NUT, hexagon, 4–40	4T3599
3606	263, 265, 268, 273, 279, 280	NUT, hexagon, 6–40	4T3606
71045	277	NUT, hexagon, 6–40	4T71045
1026	261, 262, 263, 289, 291, 295	SCREW, machine, 6–40 x 3/8	4T1026
1160	262, 277, 294, 295	SCREW, machine, 6–40 x 5/16	4T1160
1176	261, 262, 275, 294	SCREW, machine, 6–40 x 3/16	4T1176
6745	262, 264 to 267, 270, 272	SCREW, machine, 10–32 x ½	4T6745
6746	261, 263 to 268, 270, 272 to 275, 277, 278, 280, 281, 284 to 287, 291, 294, 295, 296	SCREW, machine, 6–40 x 5/16	4T6746

Ref. symbol	Fig. location	Name of part and description	Signal Corps stock No.
6811	264, 266, 267, 268, 272, 274, 277, 278, 280, 281, 287, 291, 296	SCREW, machine, 6–40 x 5/8	4T6811
8539	268, 273, 277, 278, 280, 284, to 286	SCREW, machine, 6–40 x 1/2	4T8539
80342	264, 268, 273, 274, 278	SCREW, machine, 6–40 x 23/64	4T80342
6942	268, 277, 287	SCREW, machine, eccentric, 4–40	4T6942
1030	268	SCREW, shoulder, 6–40	4T1030
82392	262	SHIM, 0.004" thk	4T82392
7602	268	SPRING, compression	4T7602
35-68	261, 273	SPRING, extension	4T35-68
3610	269	SPRING, extension	4T3610
4705	262	SPRING, extension	4T4705
7603	262, 268	SPRING, extension	4T7603
7614	277, 280	SPRING, extension	4T7614
7615	266	SPRING, extension	4T7615
7634	269	SPRING, extension	4T7634
7825	269	SPRING, extension	4T7825
7965	262, 269	SPRING, extension	4T7965
72595	261	SPRING, extension	4T72595
75229	268	SPRING, extension	4T75229
95496	263	SPRING, extension	4T95496
103-27	262, 263, 272, 294	WASHER, flat	4T103-27
3438	261, 264, 265, 268, 273, 274, 278, 290, 293, 295, 296	WASHER, flat	4T34438
7001	265, 277, 280, 284, 285, 291	WASHER, flat	4T7001
7002	261, 263, 264, 265, 268, 272, 273, 274, 278 to 282, 284 to 287, 289 to 292, 294, 295, 296	WASHER, flat	4T7002
34432	268, 278, 284, 290	WASHER, flat	4T34432
71073	277, 280	WASHER, flat	4T71073
72883	266	WASHER, flat	4T72883

Ref. symbol	Fig. location	Name of part and description	Signal Corps stock No.
6861	266	WASHER, flat, felt	4T6861
2191	261 to 268, 270, 272 to 275, 277 to 282, 284 to 296	WASHER, lock	4T2191
2669	261, 262, 264 to 268, 270, 272, 274 to 276, 278, 280, 288, 290, 293 to 295	WASHER, lock	4T2669
3640	261 to 263, 268, 272 to 275, 277, 284, 287 to 289, 291, 294, 297	WASHER, lock	4T3640
90791	277, 280	WASHER, lock	4T90791
		Maintenance parts common to typing reperforators FPR5, FPR21, and FPR 23	
70794	268	ARM, ribbon reverse	4T70794
95467	268, 273	ARM, ribbon reverse	4T95467
122-700	262	ARM ASSEMBLY, detent	4T122-700
6834	264	BAIL, ribbon reverse	4T6834
95461	269	BAR, code 1J	4T95461
95462	269	BAR, code, 2J	4T95462
95463	269	BAR, code, 3J	4T95463
95464	269	BAR, code, 4J	4T95464
95465	269	BAR, code, 5J	4T95465
6692	269	BAR, pull	4T6692
6916	269	BAR, pull	4T6916
8458	269	BAR, pull	4T8458
6917	269	BAR, pull, figure shift	4T6917
98968	269	BAR, type: No. 2; w/pallet (X/).	4T98968
98969	269	BAR, type: No. 3; w/pallet (Q 1)	4T98969
98971	269	BAR, type: No. 4; w/pallet (V ;)	4T98971
98974	269	BAR, type: No. 5; w/pallet (G &)	4T98974
98975	269	BAR, type: No. 6; w/pallet (W 2)	4T98975
98981	269	BAR, type: No. 8; w/pallet (C :)	4T98981
98984	269	BAR, type: No. 9; w/pallet (D $)	4T98984

Ref. symbol	Fig. location	Name of part and description	Signal Corps stock No.
98985	269	BAR, type: No. 10; w/pallet (R 4)	4T98985
98991	269	BAR, type: No. 12; w/pallet (A -)	4T98991
98992	269	BAR, type: No. 13; w/pallet (T 5)	4T98992
98993	269	BAR, type: No. 14; w/pallet (E 3)	4T98993
98998	269	BAR, type: No. 16; w/pallet (I 8)	4T98998
98999	269	BAR, type: No. 17; w/pallet (0 9)	4T98999
99001	269	BAR, type: No. 18; w/pallet (H £)	4T99001
99004	269	BAR, type: No. 19; w/pallet (L))	4T99004
99006	269	BAR, type: No. 20; w/pallet (U 7)	4T99006
99010	269	BAR, type: No. 22 w/pallet (Y 6)	4T99010
99013	269	BAR, type: No. 24; w/pallet (B ?)	4T99013
99016	269	BAR, type: No. 25; w/pallet (K ()	4T99016
99019	269	BAR, type: No. 26; w/pallet (Z ")	4T99019
99028	269	BAR, type: No. 1; w/pallet (S)	4T99028
72644	266	BEARING, ball	4T72644
80358	270, 276, 283	BEARING, ball	4T80358
6954	265	BUMPER, leather	4T6954
95416	263	BUSHING, bearing	4T95416
95490	263	BUSHING, bearing	4T95490
95492	263	BUSHING, bearing	4T95492
96837	262	BUSHING, bearing	4T96837
6859	263, 265	COLLAR, spacing	4T6859
72884	266	DISK, clutch	4T72884
95447	262	ECCENTRIC	4T95447
4809	267	FELT, oiling	4T4809
4813	267	FELT, oiling	4T4813
7824	266	FELT, oiling	4T7824
72521	266	FELT, oiling	4T72521
72522	266	FELT, oiling	4T72522

Ref. symbol	Fig. location	Name of part and description	Signal Corps stock No.
75226	264	FELT, oiling	4T75226
98150	264	FELT, oiling	4T98150
7042	268, 273	GEAR, bevel	4T7042
7068	264	GEAR, bevel, 18 teeth	4T7068
72562	266	GEAR, clutch	4T72562
74502	266	GEAR, clutch	4T74502
73106	275	GEAR, helical, fiber, 35 teeth	4T73106
78509	270	GEAR, helical, fiber, 30 teeth	4T78509
8493	264	LATCH, lever	4T8493
6909	268	LEVER	4T6909
6989	267	LEVER	4T6989
8158	277, 280	LEVER, selector, left	4T8158
8157	277, 280	LEVER, selector, right	4T8157
6685	277, 280	LEVER, selector, sword	4T6685
6686	277, 280	LEVER, T	4T6686
73481	262	LEVER, tape tension	4T73481
7044	268	LINK, shaft	4T7044
34-1	261 to 263, 266	NUT, hexagon, ¼ – 32	4T34-1
34-4	264, 267, 268, 274, 278, 284, 290, 291, 293, 294	NUT, hexagon, 10–32	4T34-4
3595	262, 296	NUT, hexagon, ¼ – 32	4T3595
3597	262	NUT, hexagon, 5/32 – 40	4T3597
7415	266	NUT, hexagon, ½ – 32	4T7415
70497	266	NUT, hexagon, 5/16 – 32	4T70497
72517	266	NUT, hexagon, 5/16 – 32	4T72517
95438	263	NUT, special, 6–40	4T95438
36-24	266	PIN, straight	4T36-24
6689	277, 280	PLATE, spacer	4T6689
95436	263	PLATE, spacer	4T95436

Ref. symbol	Fig. location	Name of part and description	Signal Corps stock No.
111603	261	PLATEN, typewriter, minature, blue PLASTIC, 0.350″ diam x ¼″ lg	4T111603
7007	268	PLUNGER, trip	4T7007
6999	263	POST, supporting	4T6999
6874	267	ROLLER, steel	4T6874
95493	263	ROLLER, steel, punch-arm cam	4T95493
95499	263	SCREW, adjusting	4T95499
33–85	262	SCREW, machine, 2–56 x ⅜	4T33-85
33–111	265	SCREW, machine, 2–56 x $\frac{3}{16}$	4T33-111
1245	267	SCREW, machine, 10–32 x 1	4T1245
5740	262	SCREW, machine, 2–56 x ¼	4T5740
6810	261, 267, 268, 278, 284, 294, 295	SCREW, machine, 10–32 x ⅜	4T6810
8543	262, 286, 290, 293, 294, 296	SCREW, machine, 6–40 x ¼	4T8543
72508	262, 284	SCREW, machine, 6–40 x ¾	4T72508
82440	266, 274, 280	SCREW, machine, 6–40 x $\frac{7}{16}$	4T82440
93191	262	SCREW, machine, 4–40 x $\frac{5}{16}$	4T93191
95971	262	SCREW, machine, 4–40 x ½	4T95971
1100	267, 275	SCREW, pilot, ¼ – 32	4T1100
6801	268, 278, 284	SCREW, pilot, 4–40	4T6801
6990	266	SCREW, pilot, ¼ – 32	4T6990
74399	263, 277, 280	SCREW, pilot, 6–40	4T74399
95443	262	SCREW, pilot, ¼ – 32	4T95443
95487	263	SCREW, pilot, ¼ – 32	4T95487
6807	264, 268, 286	SCREW, set, 6–40	4T6807
33–224	261	SCREW, shoulder, 6–40	4T33-224
6799	261, 268	SCREW, shoulder, 6–40	4T6799
6800	261, 264, 267, 268, 273, 287	SCREW, shoulder, 6–40	4T6800
6805	261, 268, 284, 287	SCREW, shoulder, 6-40	4T6805
71659	261, 290	SCREW, shoulder, 6-40	4T71659

Ref. symbol	Fig. location	Name of part and description	Signal Corps stock No.
91899	265	SEGMENT, typebar	4T91899
72576	266	SHAFT, main	4T72576
8896	261 to 263, 287	SHIM, 0.005" thk	4T8896
71047	265, 270	SHIM, 0.010" thk	4T71047
96763	266	SHIM, 0.012" thk	4T96763
96764	266	SHIM, 0.016" thk	4T96764
96765	266	SHIM, 0.020" thk	4T96765
5363	268, 273	SPRING, compression	4T5363
6993	266	SPRING, compression	4T6993
7599	264	SPRING, compression	4T7599
7659	264	SPRING, compression	4T7659
72514	266	SPRING, compression	4T72514
72885	266	SPRING, compression	4T72885
95430	261	SPRING, compression	4T95430
95456	262	SPRING, compression	4T95456
35-27	264	SPRING, extension	4T35-27
95428	263	SPRING, extension	4T95428
101083	267	SPRING, extension	4T101083
96846	262	SPRING, flat	4T96846
84023	262	SPRING, torsion	4T84023
95459	263	STUD, bearing	4T95459
7386	261, 287	STUD, mounting	4T7386
7484	265	STUD, mounting	4T7484
123-244	263, 278, 280	WASHER, flat	4T123-244
6987	265	WASHER, flat	4T6987
8330	261, 262, 275, 282, 284, 290, 293	WASHER, flat	4T8330
72563	266	WASHER, flat	4T72563
72579	266	WASHER, flat	4T72579

Ref. symbol	Fig. location	Name of part and description	Signal Corps stock No.
74722	261, 263, 277, 280	WASHER, flat	4T74722
90752	267	WASHER, flat	4T90752
2449	261, 264, 275, 296	WASHER, lock	4T2449
2920	264	WASHER, lock	4T2920
4814	268, 273, 291	WASHER, lock	4T4814
72575	266	WASHER, lock	4T72575
86920	262	WHEEL, detent	4T86920
		Maintenance part common to typing reperforators FPR5, FPR17, and FPR21	
1028	277, 278	SCREW, machine, 4–40 x ¼	4T1028
		Maintenance part common to typing reperforators FPR17, FPR21, and FPR23	
33038	273	SPRING, extension	4T33038
		Maintenance parts common to typing reperforators FPR5, and FPR17	
M-177	277	COIL, solenoid	4T177M
6830	268	LEVER	4T6830
71046	277	SCREW, adjusting, 6-40	4T71046
7612	277	SPRING, extension	4T7612
2438	277	WASHER, flat	4T2438
8472	277	WEDGE, locking	4T8472
		Maintenance part common to typing reperforators FPR5, and FPR21	
2623	268, 278	SPRING, extension	4T2623
		Maintenance parts common to typing reperforators FPR21 and FPR23	
90518	280	ARM, extension	4T90518
90516	280	ARM, selector	4T90516
78400	274	ARM ASSEMBLY, contact, inner disk	4T78400
78399	274	ARM ASSEMBLY, contact, outer disk	4T78399
98970	269	BAR, type: No. 4; w/pallet (V ⓘ)	4T98970
98973	269	BAR, type: No. 5; w/pallet (G ↘)	4T98973

Ref. symbol	Fig. location	Name of part and description	Signal Corps stock No.
98976	269	BAR, type: No. 7; w/pallet (F →)	4T98976
98977	269	BAR, type: No. 7; w/pallet (F !)	4T98977
98980	269	BAR, type: No. 8; w/pallet (C O)	4T98980
98983	269	BAR, type: No. 9; w/pallet (D ↗)	4T98983
98986	269	BAR, type: No. 11; w/pallet (J ↙)	4T98986
98987	269	BAR, type: No. 11; w/pallet (J ⊃')	4T98987
98990	269	BAR, type: No. 12; w/pallet (A ↑)	4T98990
98994	269	BAR, type: No. 15; w/pallet (N ◍)	4T98994
98995	269	BAR, type: No. 15; w/pallet (N ,)	4T98995
99000	269	BAR, type: No. 18; w/pallet (H ↓)	4T99000
99003	269	BAR, type: No. 19; w/pallet (L ↖)	4T99003
99007	269	BAR, type: No. 21; w/pallet (M .)	4T99007
99012	269	BAR, type: No. 24; w/pallet (B ⊕)	4T99012
99015	269	BAR, type: No. 25; w/pallet (K ←)	4T99015
99018	269	BAR, type: No. 26; w/pallet (Z +)	4T99018
99032	269	BAR, type: No. 27; w/pallet (< <)	4T99032
99033	269	BAR, type: No. 28; w/pallet (≡ ≡)	4T99033
99034	269	BAR, type: No. 29; w/pallet (⟪ ⟫)	4T99034
104951	269	BAR, type: No. 23; w/pallet (P ⌀)	4T104951
5061	275	BEARING, ball	4T5061
102790	262	BLOCK ASSEMBLY, punch	4T102790
102791	262	BRACKET	4T102791
78403	274	BRUSH, electrical contact	4T78403
8094	275	BRUSH, electrical contact, carbon, with spring	4T8094
74006	264	BUSHING, bearing	4T74006
81598	262	BUSHING, bearing	4T81598
91265	266	CAM ASSEMBLY, sleeve	4T91265
77911	274	CAP, contact brush	4T77911
M-207	280	COIL, solenoid	4T702M

Ref. symbol	Fig. location	Name of part and description	Signal Corps stock No.
6314	274	CONTACT ASSEMBLY	4T6314
6320	274	CONTACT, screw	4T6320
72835	274	CONTACT, screw	4T72835
90774	268	CRANK, bell	4T90774
89896	272, 278	FITTING, lubrication	4T89896
90088	268	LATCH, lever	4T90088
90520	280	LEVER	4T90520
103310	263, 265, 269	LEVER, code-bar locking	4T103310
5475	280	NUT, hexagon, 3/16-40	4T5475
6345	274	NUT, hexagon, 6-32	4T6345
102111	262	PAWL, ratchet	4T102111
90507	280	PLATE, retainer	4T90507
74008	264	ROLLER, steel	4T74008
1064	274	SCREW, machine, 6–32 x 1/4	4T1064
1272	275	SCREW, machine, 6–40 x 11/16	4T1272
6344	274	SCREW, machine, 6-32 x 11/32	4T6344
33-346	273	SCREW, shoulder, 6-40	4T33-346
1010	262	SCREW, shoulder, 6-40	4T1010
4708	280	SPRING, extension	4T4708
6323	274	SPRING, extension	4T6323
90510	280	SPRING, extension	4T90510
90517	280	SPRING, extension	4T90517
91120	280	SPRING, extension	4T91120
122-577	262	SPROCKET, feed	4T122-577
102794	262	STRIPPER, punch, code	4T102794
102792	262	STRIPPER, punch, feed	4T102792
99250	274, 275	SUPPRESSOR, electrical noise	4T99250
91755	279	SWITCH, toggle	4T91755
73232	275	WASHER, flat, felt, black	4T73232

Ref. symbol	Fig. location	Name of part and description	Signal Corps Stock No.
		Maintenance parts for typing reperforator FPR5 only	
8508	277	ARMATURE, electromagnet	4T8508
95451	262	BLOCK ASSEMBLY, punch	4T95451
95457	262	BRACKET	4T95457
8507	266	CAM ASSEMBLY, sleeve	4T8507
6850	268	CRANK, bell	4T6850
95449	262	GUIDE, ribbon	4T95449
8511	277	LEVER	4T8511
95446	262	PAWL, ratchet	4T95446
83920	277	PLATE, spacer, top	4T83920
70803	277	SCREW, pivot, 6-40	4T70803
78824	277	SPRING, extension	4T78824
95454	262	STRIPPER, punch, steel, tape code	4T95454
95455	262	STRIPPER, punch, steel, tape feed	4T95455
8470	277	STUD, mounting	4T8470
82493	277	WASHER, flat	4T82493
		Maintenance parts for typing reperforator FPR17 only	
80827	286	LAMP, clear, 120-v, candelabra screw base	4T80827
3598	261 to 263, 265, 268, 273, 274, 277, 278, 284, 285, 287, 289, 290	NUT	4T3598
95476	261	PLATEN ASSEMBLY	4T95476
103538	261	PLATEN INSERT	4T103538
35-72	273	SPRING	4T35–72
35-133	284	SPRING	4T35–133
87656	273	SPRING	4T87656
73894	273	SCREW, set, 6-40	4T73894
		Maintenance parts for nontyping reperforator RPE26 stocked in both third or lower echelon and station stock	
M-177	301	COIL, solenoid, 105-ohm	4T177M

Ref. symbol	Fig. location	Name of part and description	Signal Corps stock No.
34-1	300, 301, 303	NUT, hexagon, ¼-32	4T34–1
34-4	300, 301, 303, 305, 308 310, 311	NUT, hexagon, 10-32	4T34–4
3598	299 to 303, 305	NUT, hexagon, 6–40	4T3598
1028	299, 301, 306	SCREW, machine, 4–40 x ¼	4T1028
6942	301	SCREW, machine, eccentric, 4–40	4T6942
70803	301	SCREW, pivot, 6–40	4T70803
35-99	303	SPRING, extension	4T35–99
7603	302	SPRING, extension	4T7603
7612	301	SPRING, extension	4T7612
7614	301	SPRING, extension	4T7614
41382	303	SPRING, extension	4T41382
41385	303	SPRING, extension	4T41385
78824	301	SPRING, extension	4T78824
86150	303	SPRING, tape guide	4T86150
73483	303	SPRING, torsion	4T73483
6861	300	WASHER, flat	4T6861
7001	301	WASHER, flat	4T7001
7002	299 to 301, 303, 305, 306, 308, 310, 311	WASHER, flat	4T7002
72883	300	WASHER, flat	4T72883
2191	299 to 303, 305 to 308, 310, 311	WASHER, lock	4T2191
2669	299, 300, 303, 305 to 308, 310, 311	WASHER, lock	4T2669
		Maintenance parts for nontyping reperforator RPE 26 stocked in station stock only	
78174	301	ARMATURE, electromagnet	4T78174
5061	310	BEARING, ball	4T5061
72644	300	BEARING, ball	4T72644
86113	302	BLOCK ASSEMBLY, punch	4T86113
78403	311	BRUSH, electrical contact	4T78403

Ref. symbol	Fig. location	Name of part and description	Signal Corps stock No.
8094	310	BRUSH, electrical contact, with spring	4T8094
86158	300	CAM ASSEMBLY, 5-unit	4T86158
70873	310	CAP, contact brush	4T70873
6320	311	CONTACT, screw	4T6320
72835	311	CONTACT, screw	4T72835
6314	311	CONTACT ASSEMBLY, switch	4T6314
72562	300	GEAR, clutch	4T72562
74502	300	GEAR, clutch	4T74502
73106	310	GEAR, helical, 35 teeth	4T73106
86868	311	INSULATOR, bushing	4T86868
74557	307	LAMP, incandescent, clear, 115-volt	4T74557
8511	301	LEVER	4T8511
6971	300	LEVER, clutch	4T6971
85364	303	LEVER, punch	4T85364
8157	301	LEVER, selector, right	4T8157
8158	301	LEVER, selector, left	4T8158
6909	302	LEVER, stop pawl	4T6909
6685	301	LEVER, sword	4T6685
6686	301	LEVER, T	4T6686
34-11	301, 307	NUT, hexagon, 2-56	4T34-11
86124	303	PAWL, ratchet, feed	4T86124
6689	301	PLATE, spacer	4T6689
92309	306	RESISTOR, fixed, wire-wound, 400-ohm	4T92309
85019	300	ROLLER, cam	4T85019
5740	302	SCREW, machine, 2–56 x ¼	4T5740
6344	311	SCREW, machine, 6–32 x $^{11}/_{32}$	4T6344
8472	301	SCREW, machine, locking wedge	4T8472
74986	299, 301	SCREW, machine, 6–40 x $^{13}/_{32}$	4T74986
6990	300, 301, 303	SCREW, pilot, ¼–32	4T6990

Ref. symbol	Fig. location	Name of part and description	Signal Corps stock No.
74399	301	SCREW, pilot, 6–40	4T74399
85020	300	SCREW, shoulder, 10–32	4T85020
86273	303	SPRING	4T86273
6993	300	SPRING, compression	4T6993
7602	302	SPRING, compression	4T7602
72514	300	SPRING, compression	4T72514
6323	311	SPRING, extension	4T6323
7105	311	TARGET, 20-division	4T7105
72563	300	WASHER, flat	4T72563
74722	301	WASHER, flat	4T74722
90791	301	WASHER, lock	4T90791
7824	300	WICK, oiling, felt	4T7824
72521	300	WICK, oiling, felt	4T72521
72522	300	WICK, oiling, felt	4T72522
		Maintenance parts for nontyping reperforator RPE26 stocked in third or lower echelon only	
34-56	301, 302, 307	NUT, hexagon, 4–40	4T34-56
3599	303	NUT, hexagon, 4–40	4T3599
33-296	303	SCREW, 6–40x7/16"	4T33-296
1030	302	SCREW, shoulder, 6–40	4T1030
6746	299 to 301, 303, 306 to 308, 310, 311	SCREW, 6–40x5/16"	4T6746
6811	300, 301, 308, 310, 311	SCREW, set, 6–40	4T6811
8539	299, 301	SCREW, 6–40x½"	4T8539
80342	299, 303, 311	SCREW, 6–40x23/64	4T80342
76298	300, 303	SPRING	4T76298
103-27	303	WASHER	4T103-27
2034	301	WASHER	4T2034
3438	299, 303, 305, 306, 311	WASHER	4T3438
3650	299	WASHER	4T3650
3640	301, 302, 303, 306, 307, 311	WASHER, lock	4T3640

2. Parts Identification Illustrations for Nontyping Reperforators

All parts used in the model 14 (RPE26) nontyping reperforators are illustrated in figures 299 through 311.

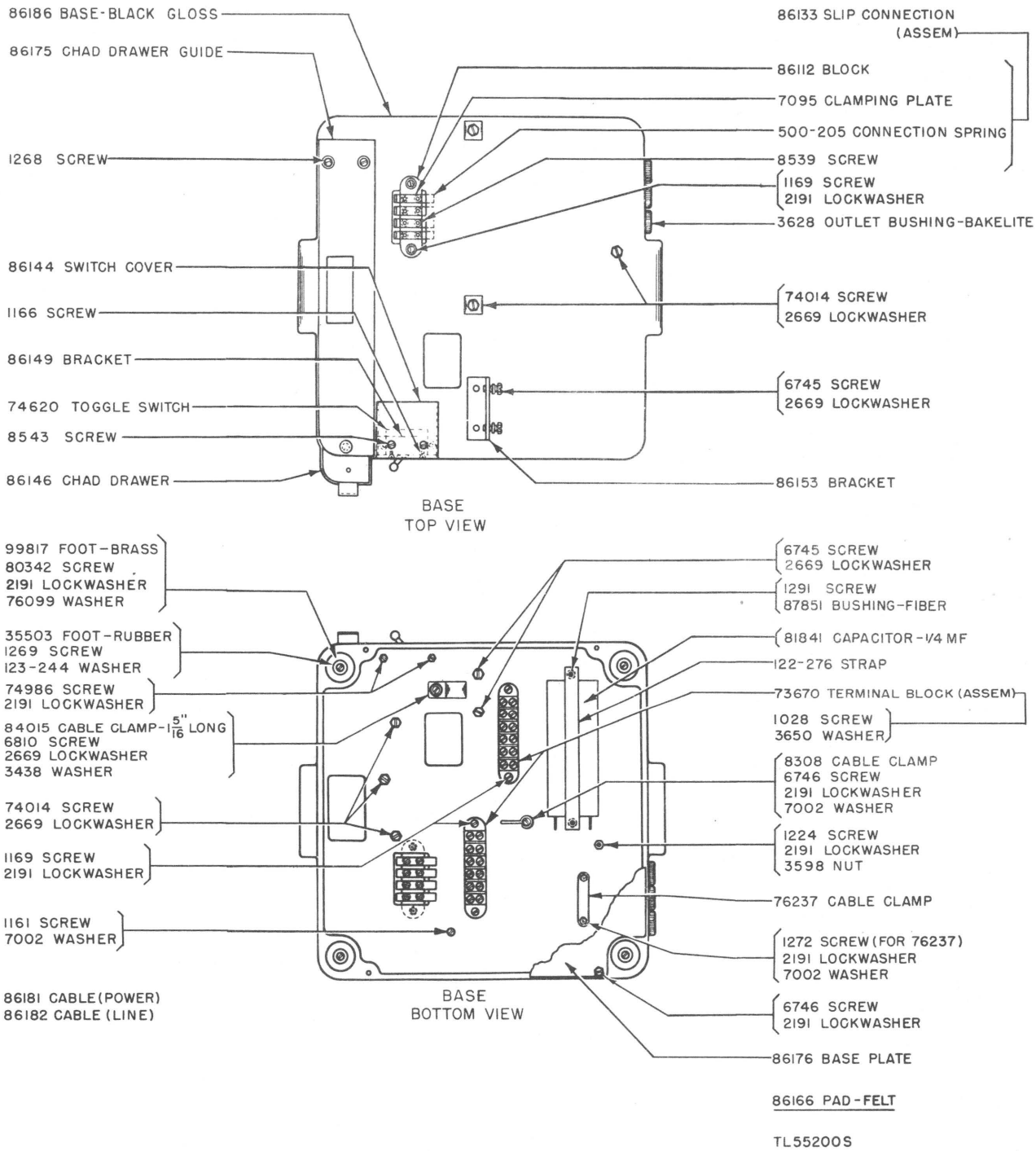

Figure 299. Base parts (RPE26).

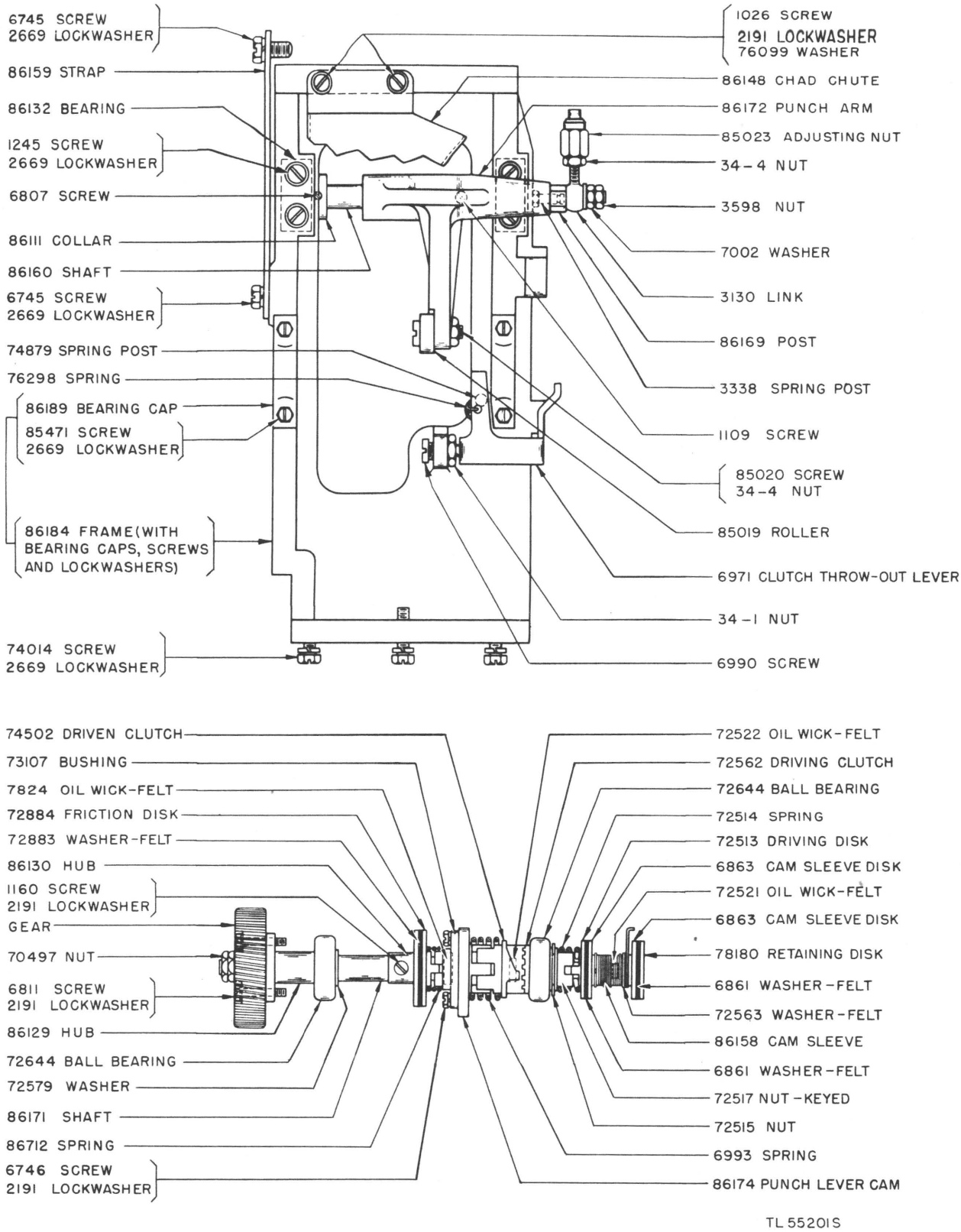

Figure 300. Frame and main shaft parts (RPE26).

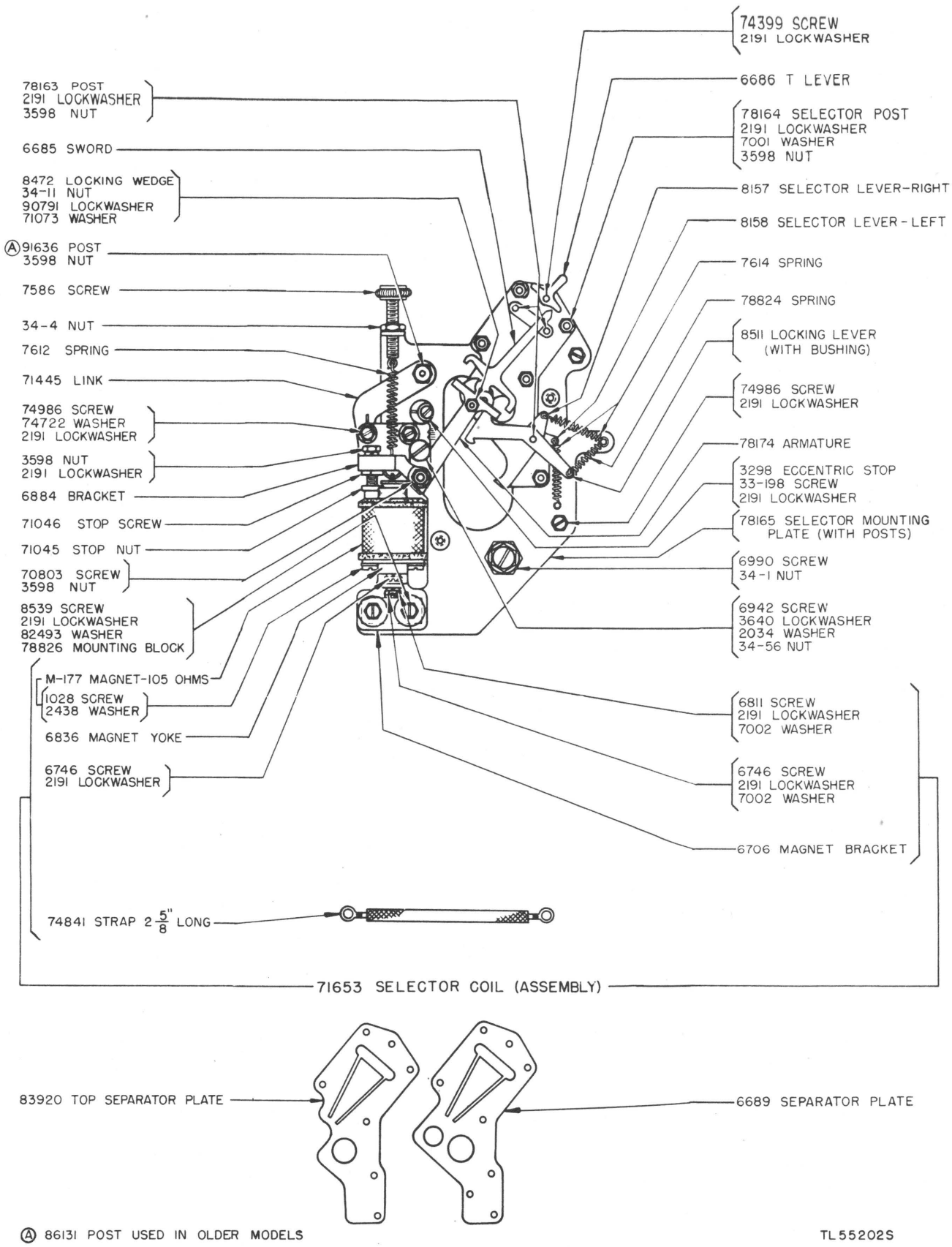

Figure 301. Selector coil assembly parts (RPE26).

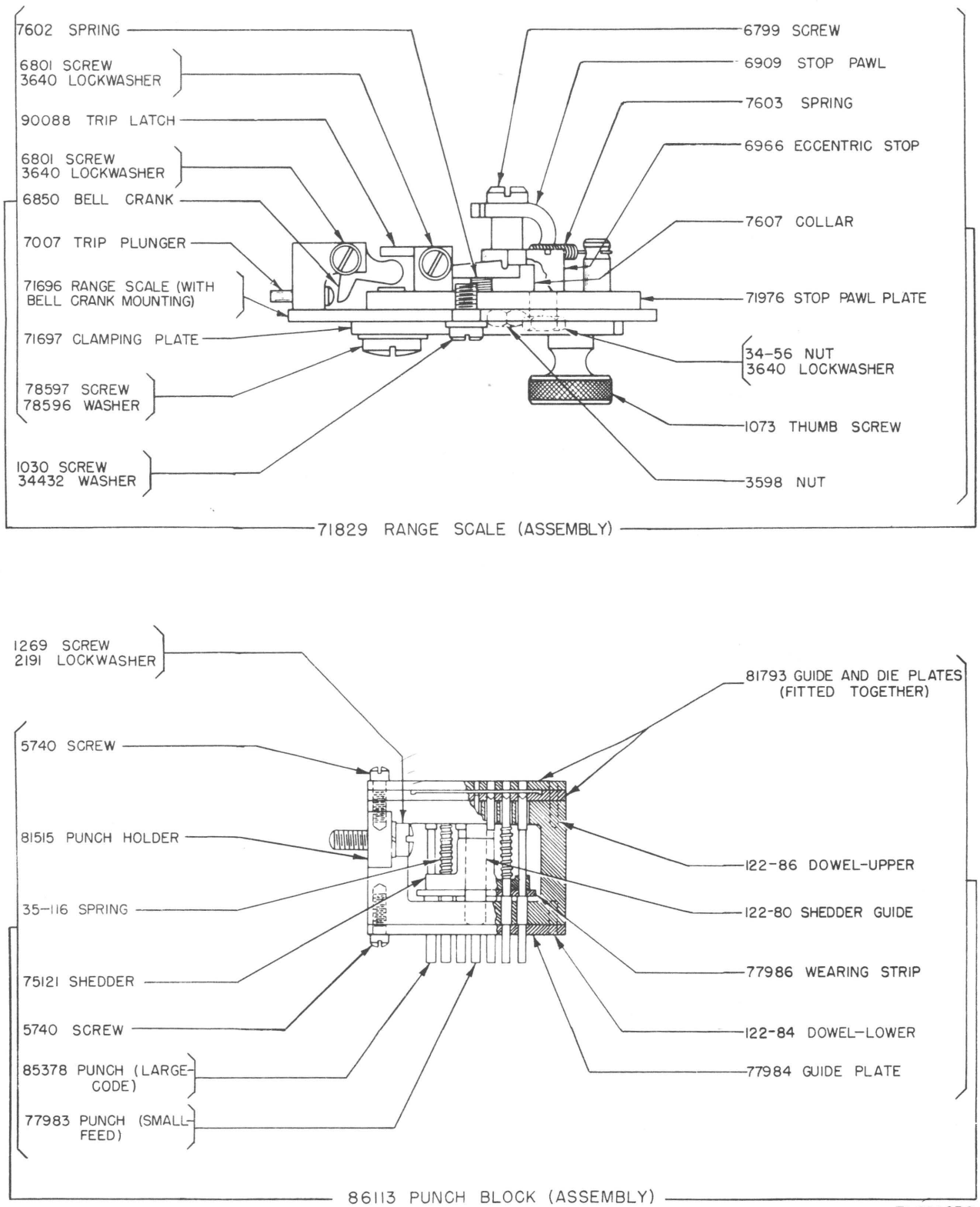

Figure 302. Range scale and punch-block assembly parts (RPE26).

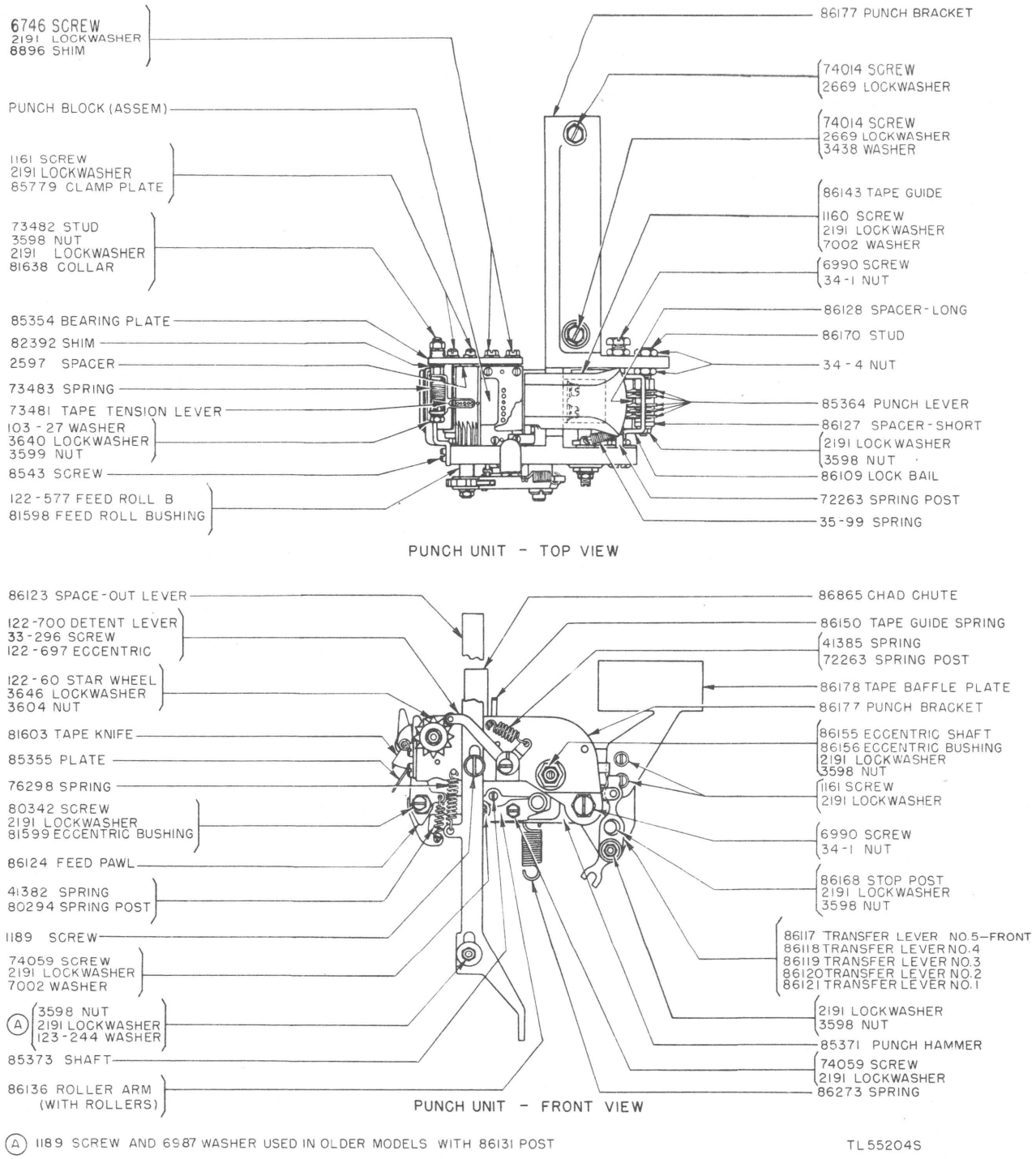

Figure 303. Punch unit parts (RPE26).

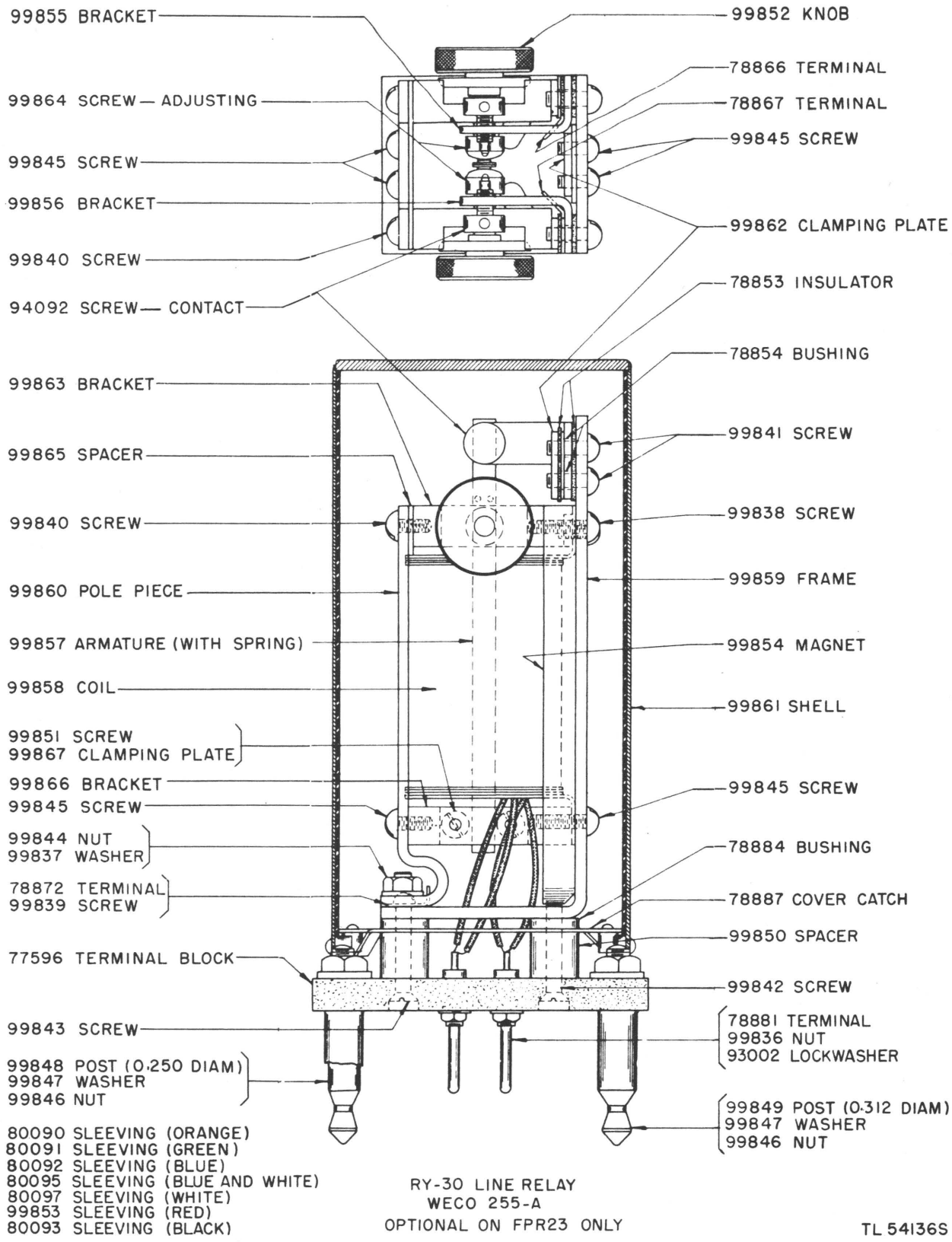

Figure 304. RY-30 line relay (WECo No. 255-A) parts (RPE26).

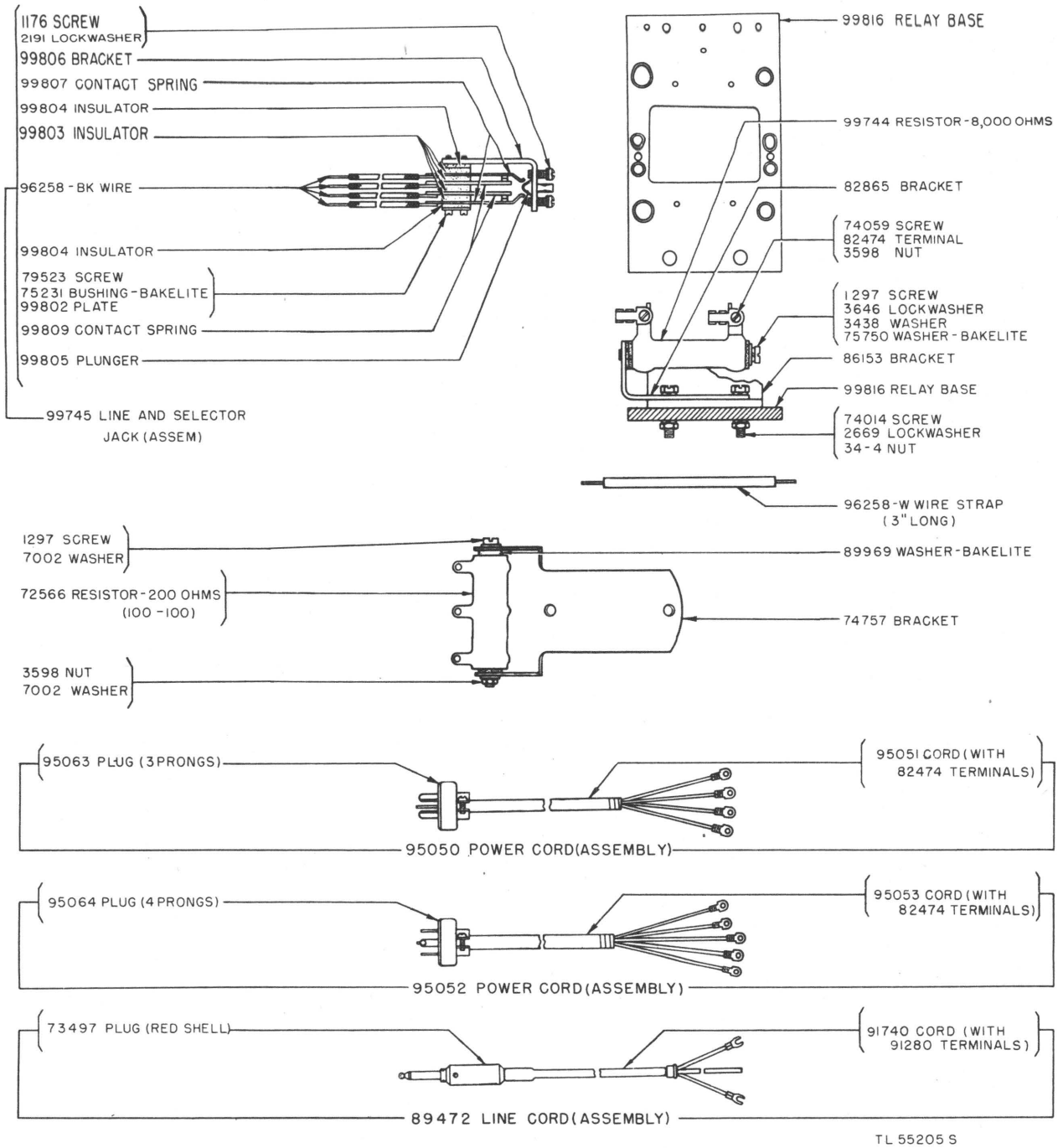

Figure 305. Jack, relay base, resistor bracket, and cord parts (RPE26).

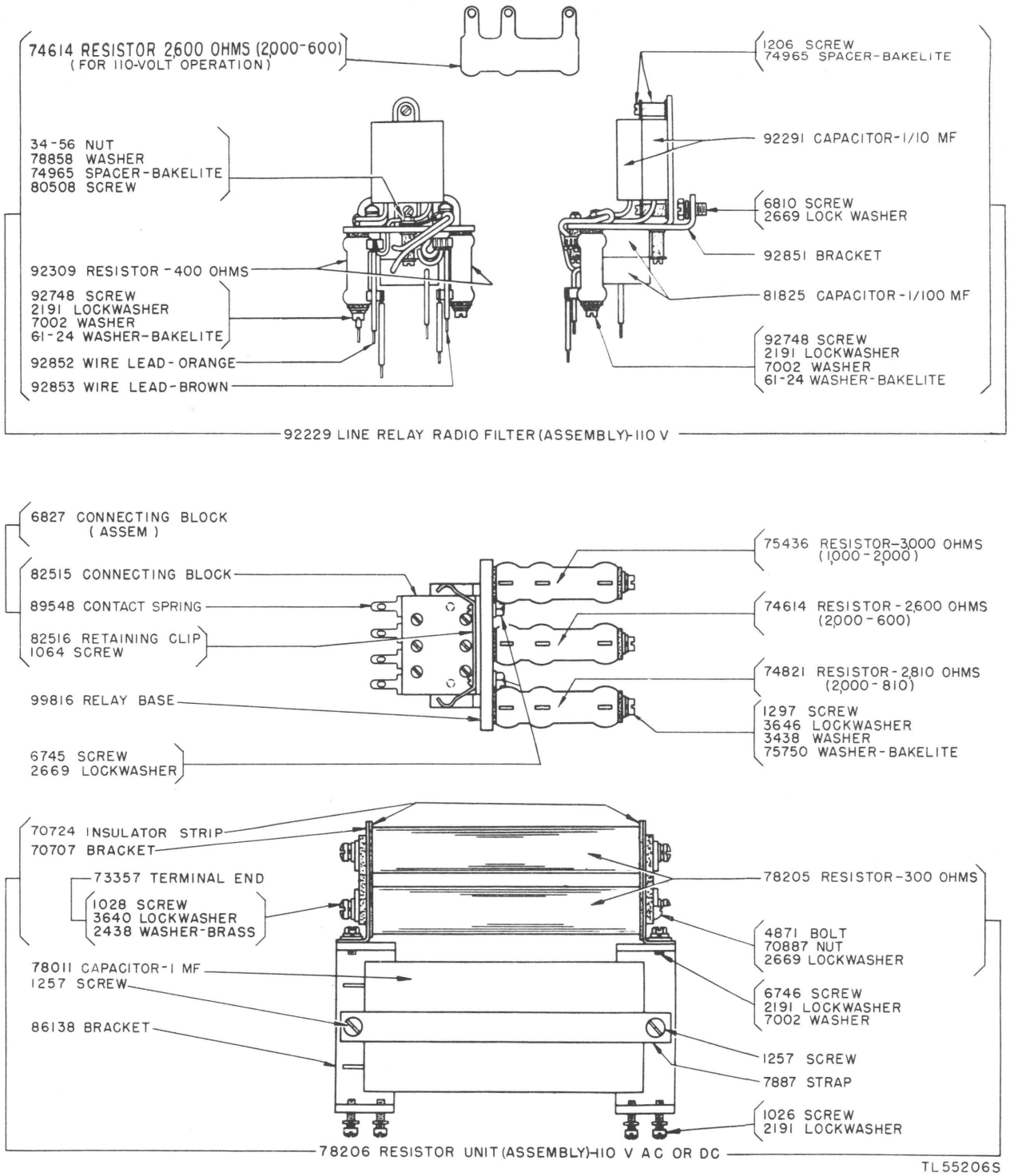

Figure 306. Line-relay radio filter and resistor unit parts (RPE26).

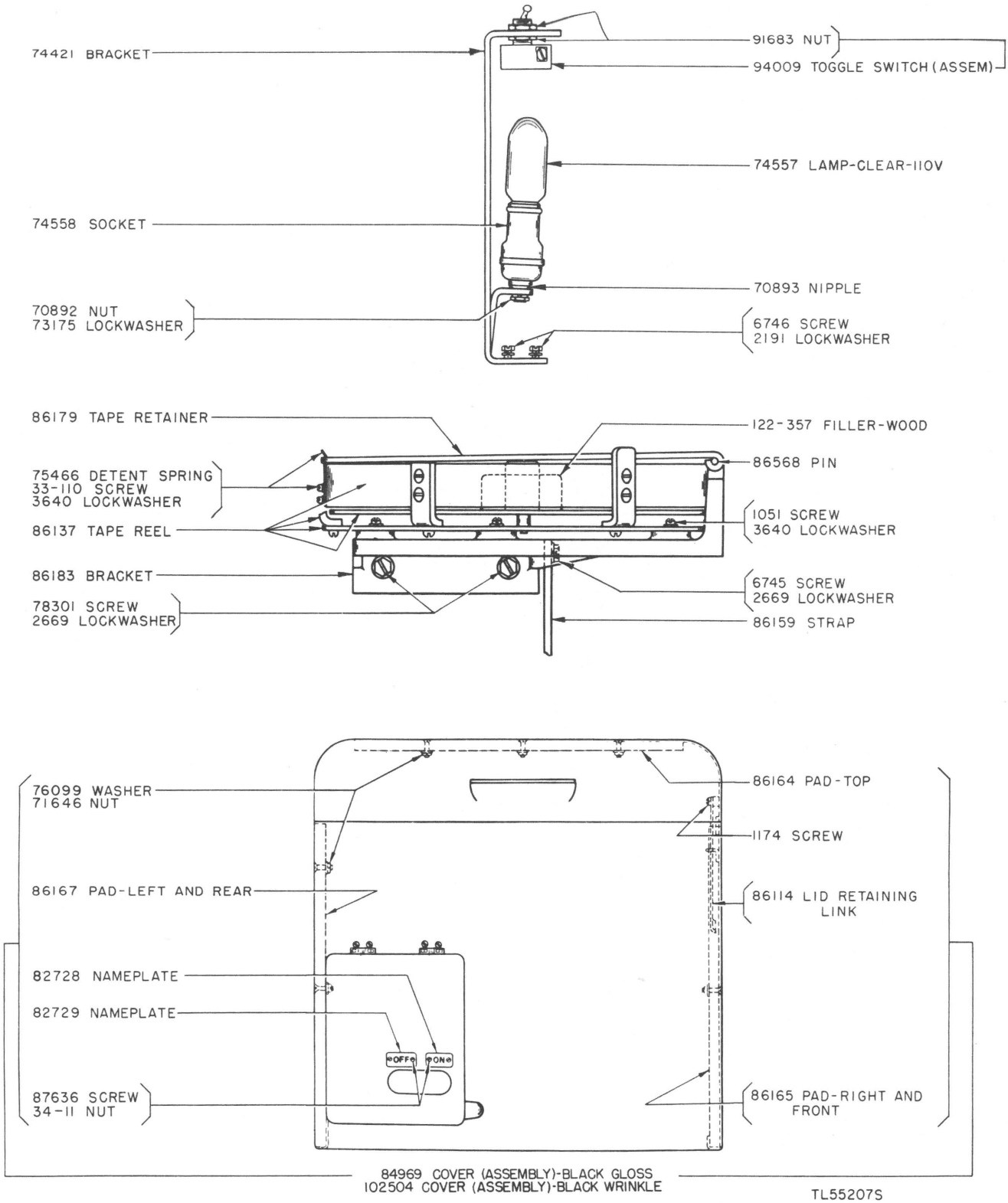

Figure 307. Target lamp, tape reel, and cover parts (RPE26).

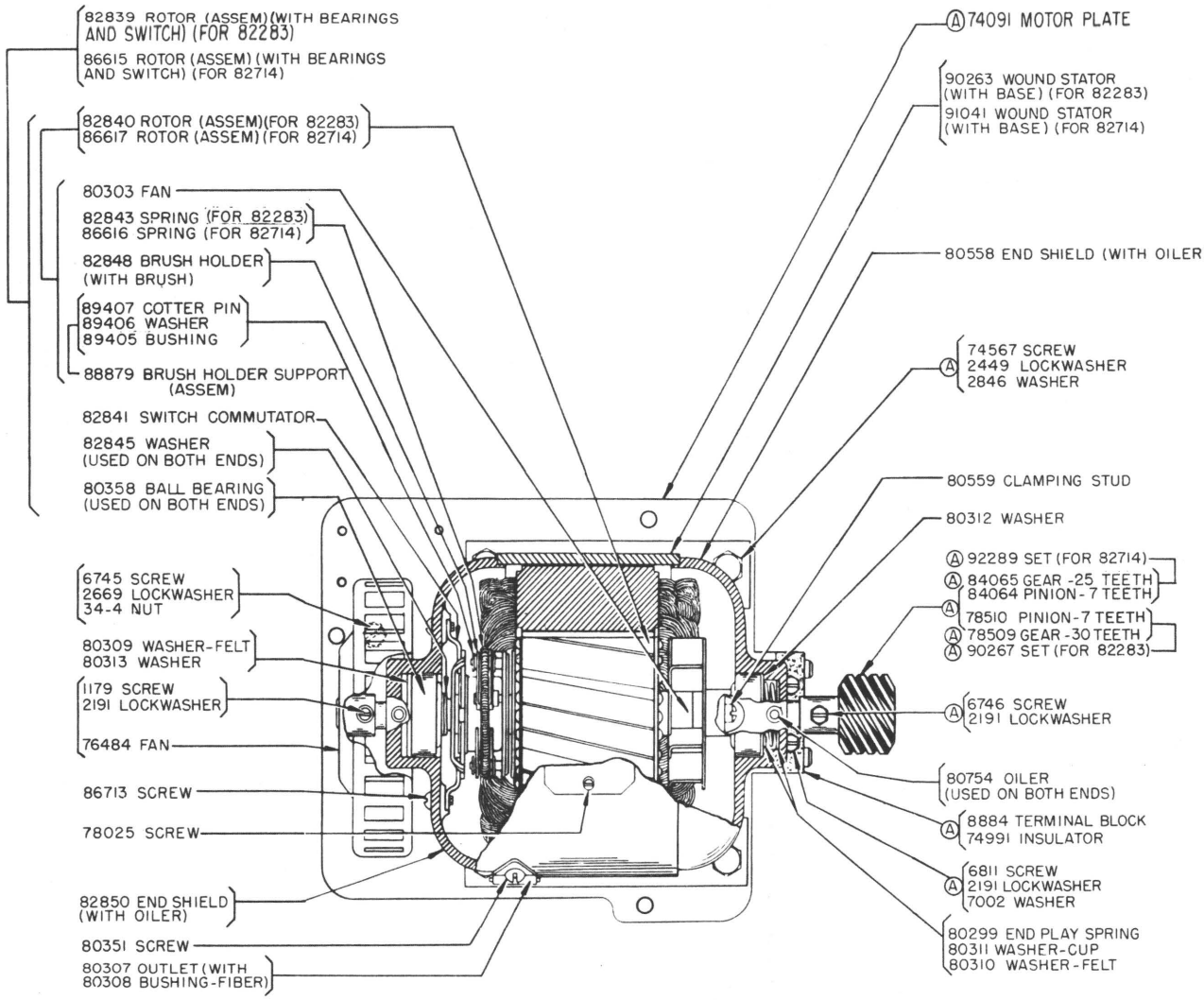

82283 SYNCHRONOUS MOTOR, (OLD STYLE) 1/40 HP, 110 V, 60-CYCLE AC (GE MODEL 5SH25AB11) - EXCLUDES PARTS MARKED (A)

82714 SYNCHRONOUS MOTOR, 1/40 HP, 110 V, 50-CYCLE AC (GE MODEL 5SH25AB14) - EXCLUDES PARTS MARKED (A)

TL 55208S

Figure 308. Old style synchronous motor parts (RPE26).

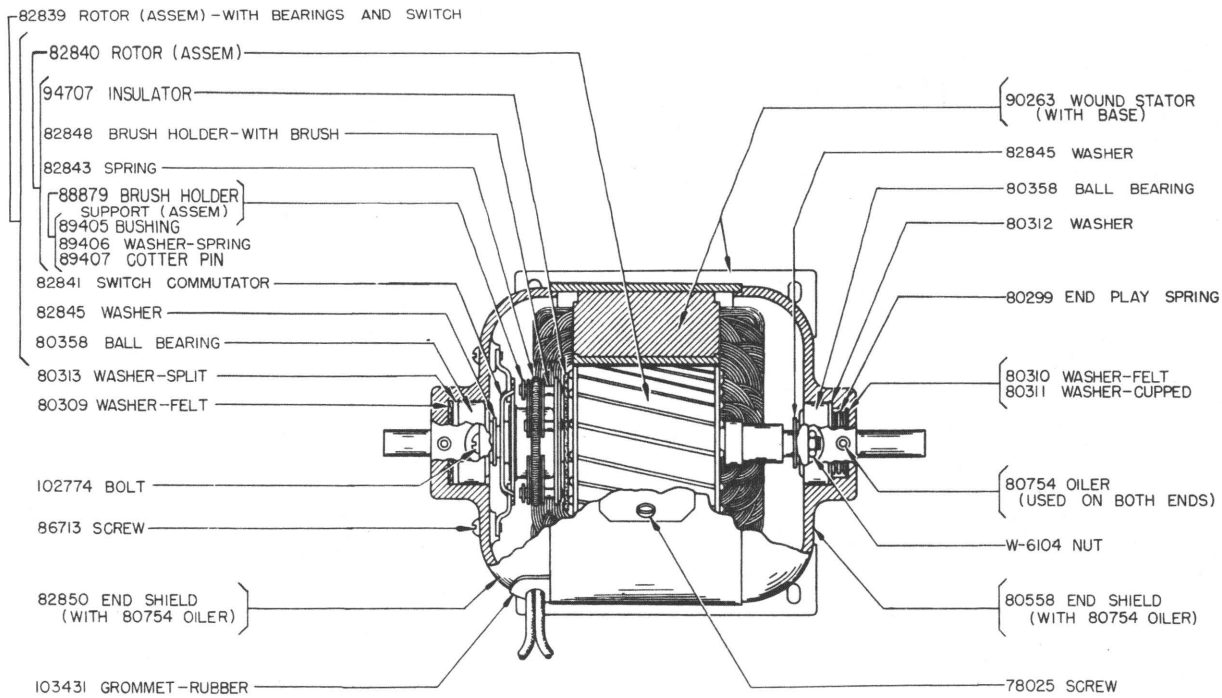

NEW STYLE

82283 SYNCHRONOUS MOTOR, 1/40 HP, 110 V, 60-CYCLE AC (GE MODEL 5SH25AB11B)

NOTE: FOR CONVERTING OLD STYLE 82283 MOTOR TO NEW STYLE MOTOR, SEE PARTS ILLUSTRATION FOR OLD STYLE 82283 MOTOR USED AS PART OF THE FPR5, FPR21, AND FPR23 TYPING REPERFORATORS.

TL55209S

Figure 309. New style synchronous motor parts (RPE26).

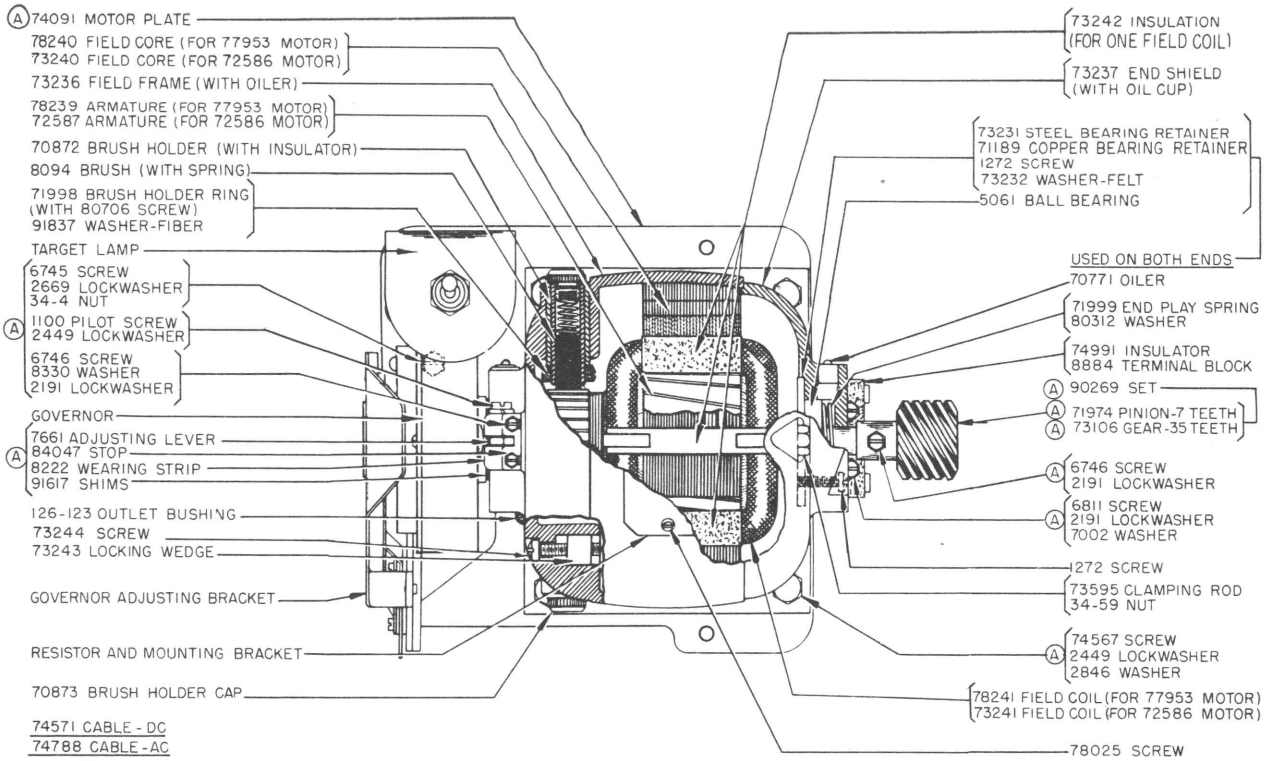

Figure 310. A-c series motor and d-c shunt motor parts (RPE26).

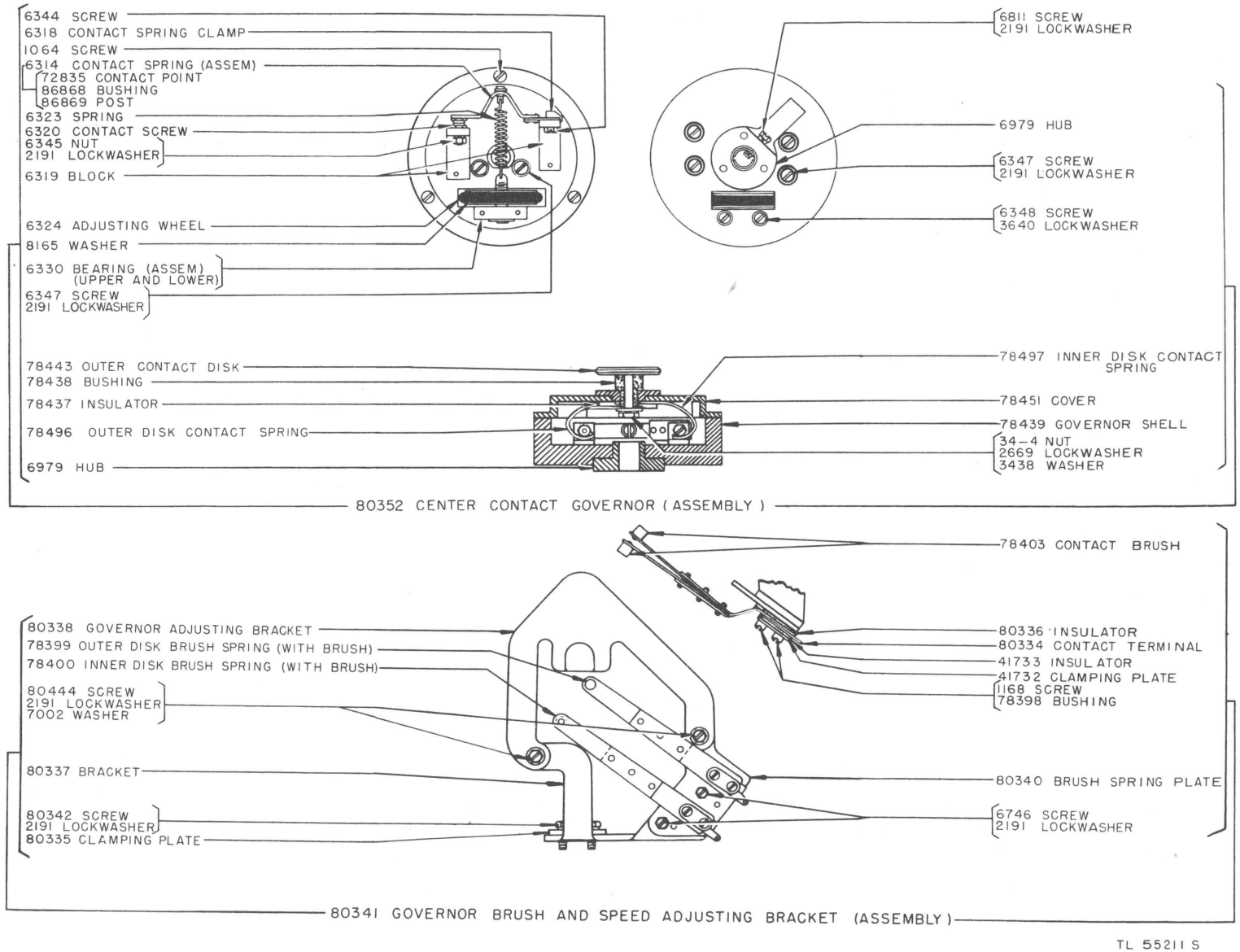

Figure 311. Center contact governor and governor brush and speed adjusting bracket parts (RPE26).

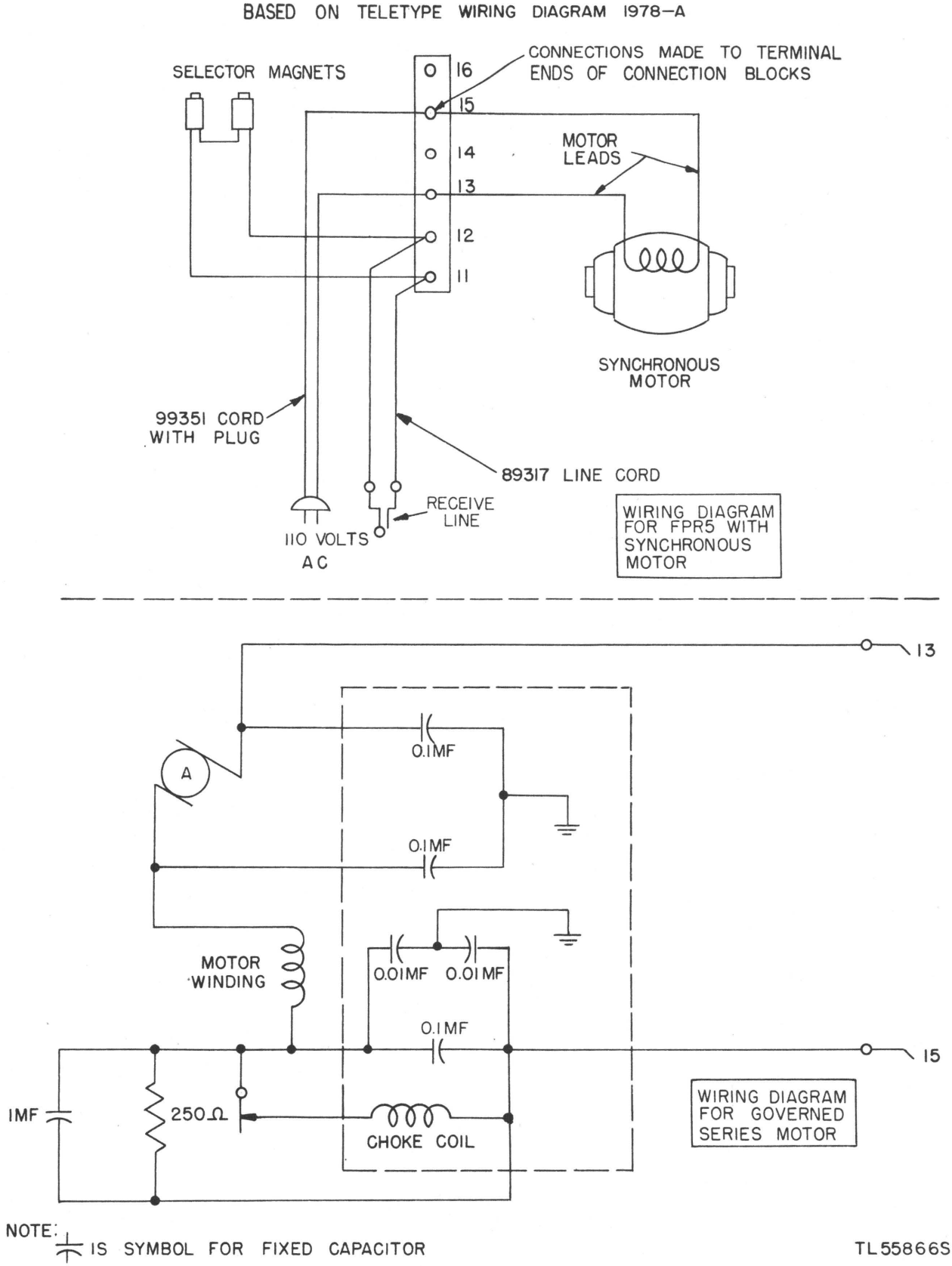

Figure 313. Wiring diagram for FPR5 typing reperforator.

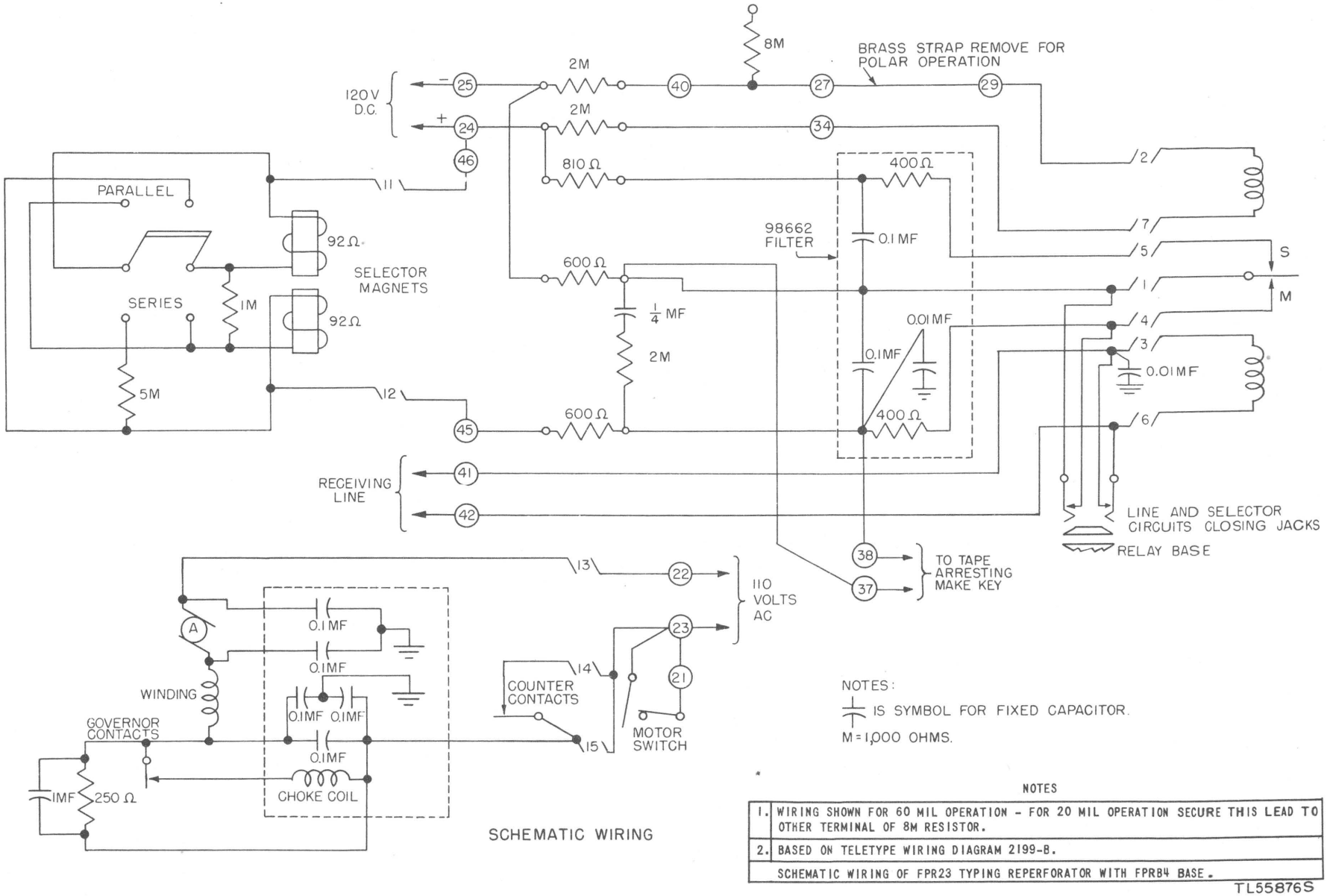

NOTES

1.	WIRING SHOWN FOR 60 MIL OPERATION - FOR 20 MIL OPERATION SECURE THIS LEAD TO OTHER TERMINAL OF 8M RESISTOR.
2.	BASED ON TELETYPE WIRING DIAGRAM 2199-B.
	SCHEMATIC WIRING OF FPR23 TYPING REPERFORATOR WITH FPRB4 BASE.

TL55876S

Figure 315. Schematic wiring diagram for FPR23 typing reperforator with FPRB4 base.

APPENDIX III

CONVERSION OF EQUIPMENT FOR 100 WORDS PER MINUTE OPERATION

1. Introduction

Due to the increasing use of teletypewriter equipment with radio relay systems, it has become necessary to provide for changes in order to adapt the teletypewriter equipment for high speed operation so that the traffic capacities are used to the fullest extent. The instructions given in this appendix include the procedure for changing mechanical parts of the model 14 typing reperforators to permit operation at 600 operations per minute (100 words per minute). In some cases it will be necessary to alter the electrical circuit of the teletypewriter set by inserting resistors or capacitors in particular parts of a circuit. Instructions for converting the electrical circuits will be given in the technical manuals covering the particular teletypewriter set involved.

Caution: The instructions contained in this appendix are given for information only. Specific instructions will be issued to interested units when conversion of the equipment is necessary. *DO NOT CONVERT EQUIPMENT FOR 100 WPM OPERATION UNLESS SO DIRECTED BY HIGHER AUTHORITY.*

2. Conversion Parts

The mechanical parts necessary for converting typing reperforators for 600 operations per minute (opm) are given in the following subparagraphs:

a. MODIFICATION KIT, SIGNAL CORPS STOCK No. 4T110893. Modification Kit 4T110893 consists of the mechanical parts listed below.

Quan.	Signal Corps stock No.	Description of part
1	4T110876	Pinion, 16 teeth
1	4T110877	Gear, 42 teeth
1	4T110878	Clutch spring
1	4T110879	Selector arm spring
1	4T110880	Selector arm detent spring
1	4T110871	Trip latch
1	4T110872	Trip latch spring
1	4T6850	Bell crank
1	4T71696	Range scale
1	4T110941	Clutch throw-out lever
1	4T72563	Felt washer
28	4T110995	Pull bars
1	4T111686	Friction disk
1	4T111602	Platen insert (metal)
1	4T111603	Platen (plastic)
1	4T111711	Backstop strip (plastic)
11	4T87901	Screw

b. MODIFICATION KIT MC–575( )/FG, SIGNAL CORPS STOCK No. 4T110894. Modification Kit MC–575( )/FG is the same as the kit listed in *a* above with the exceptions given below.

Quan.	Signal Corps stock No.	Description of part
1	4T110881	Pinion, 14 teeth; replaces pinion 4T110876
1	4T110872	Gear, 43 teeth; replaces gear 4T110877

3. Standard Features Required

The typing reperforators selected for this service must have the following standard features which are essential for 100 words per minute (wpm) operation.

a. ROLLER GUIDES FOR MAIN BAIL (FIG. 319) This feature requires the following parts:

Quan.	Signal Corps stock No.	Description of part
1	4T102230	Main bail
2	4T74008	Roller
2	4T74006	Bushing
2	4T74334	Washer
2	4T2669	Lockwasher
2	4T34-4	Nut
1	4T102231	Guide bracket (right)
1	4T102232	Guide bracket (left)
4	4T80342	Screw
4	4T2191	Lockwasher
2	4T74286	Bail guide
2	4T76275	Clamp plate
4	4T80342	Screw
4	4T2191	Lockwasher
1	4T102815	Spring bracket

Note. A 4T105285 drilling template is required for working over the 4T6969 main bail brackets on typing reperforators which are not already equipped with the main bail roller guide feature. (See fig. 318.)

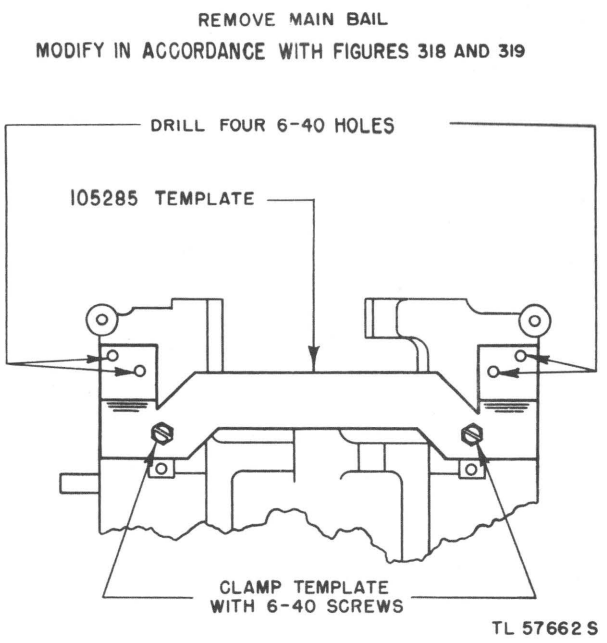

Figure 318. Rear view of main casting.

b. HOLDING MAGNET SELECTOR. The typing reperforators which operate at 600 opm must be equipped with holding magnet selector units. Figures 320 and 321 show which parts are removed and which are substituted. The following sets are parts that may be required:

(1) *Set of parts 4T97300.* These parts are used to convert from pulling to holding magnet selector units.

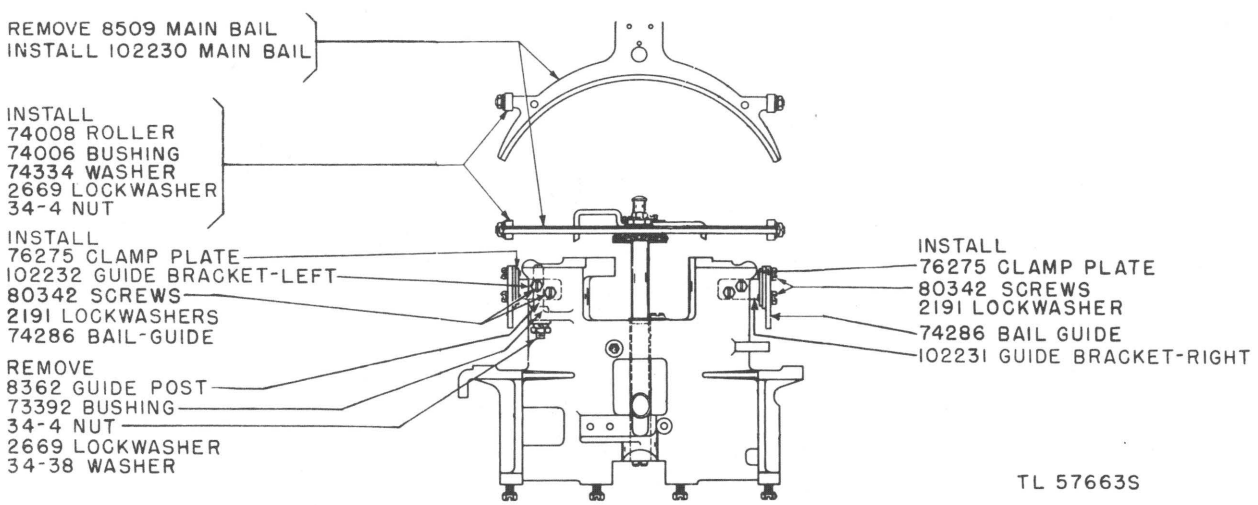

Figure 319. Main bail.

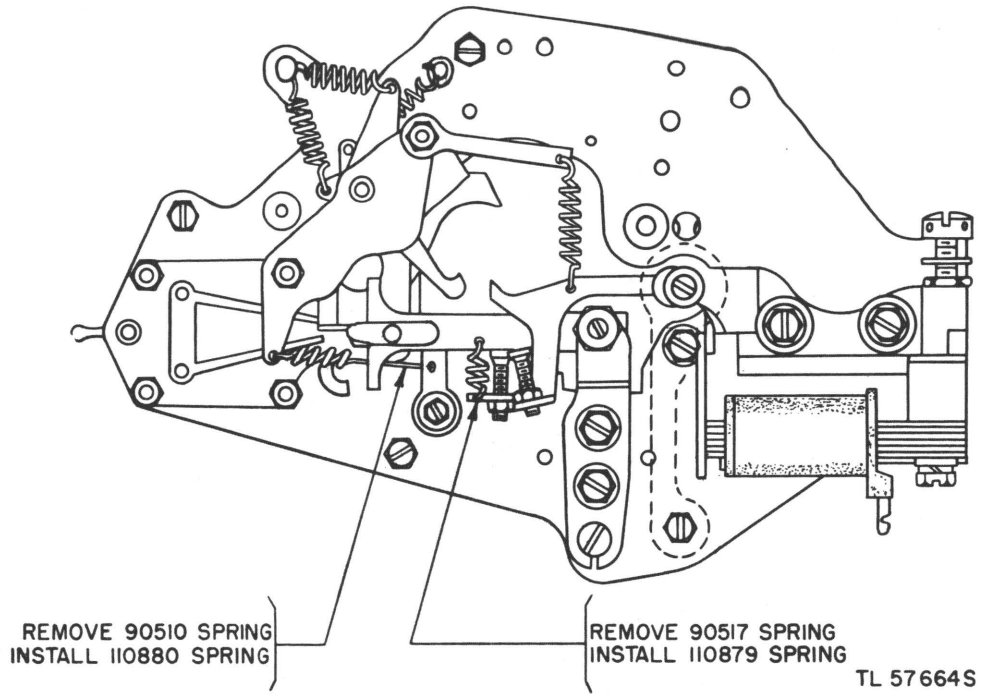

Figure 320. Selector mechanism.

(2) *Set of parts 4T98538.* These are conversion parts for model 14 base with line relay and line-test key (FPRB4) for use in conjunction with holding magnet selector units.

(3) *Set of parts 4T97320.* These are conversion parts for model 14 base with line relay minus line-test key for use in conjunction with holding magnet selector units.

c. DOUBLE STEP BELL CRANKS AND NEW CODE BAR LOCKING LEVER (FIGS. 322 and 323). These features require the following parts:

Quan.	Signal Corps stock No.	Description of part
1	4T103316	Bell crank No. 1, top
1	4T103317	Bell crank No. 2
1	4T103318	Bell crank No. 3
1	4T103319	Bell crank No. 4
1	4T103320	Bell crank No. 5, bottom
1	4T103310	Code bar locking lever

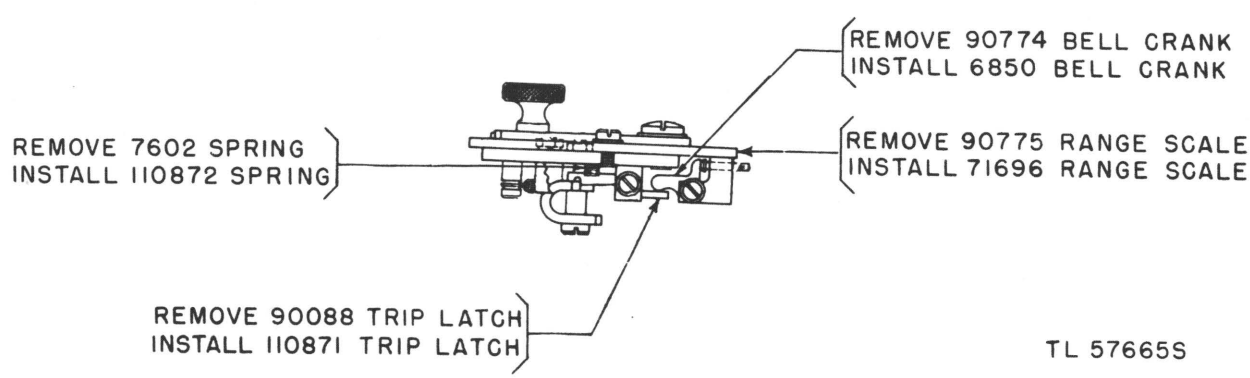

Figure 321. Range finder mechanism.

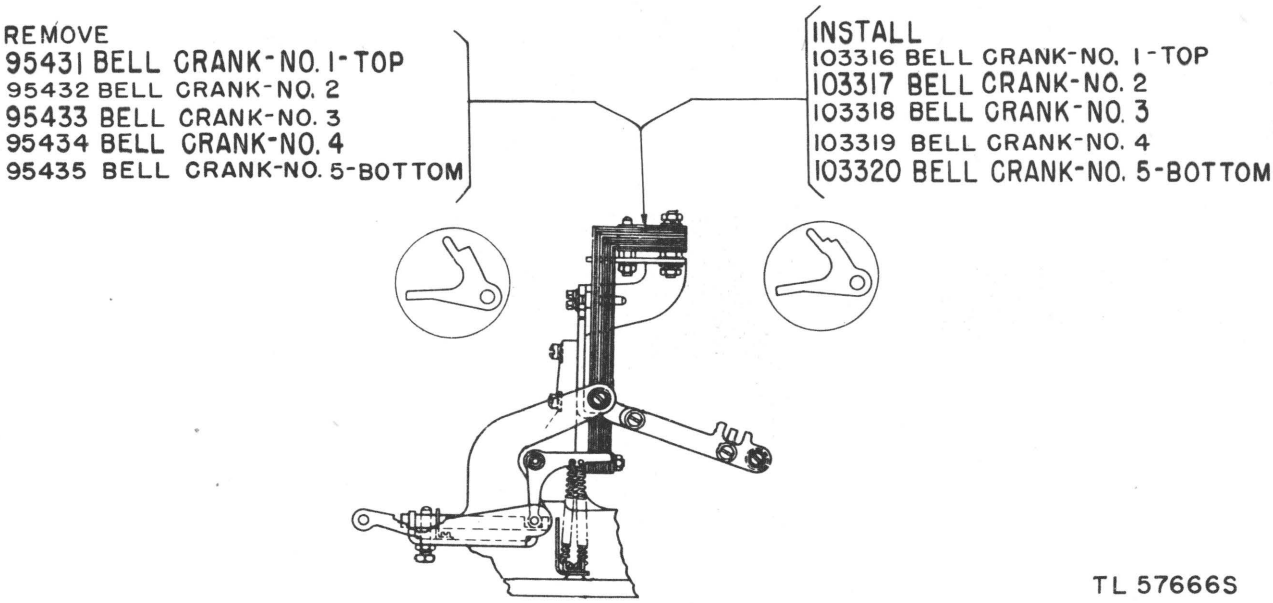

Figure 322. Bell cranks.

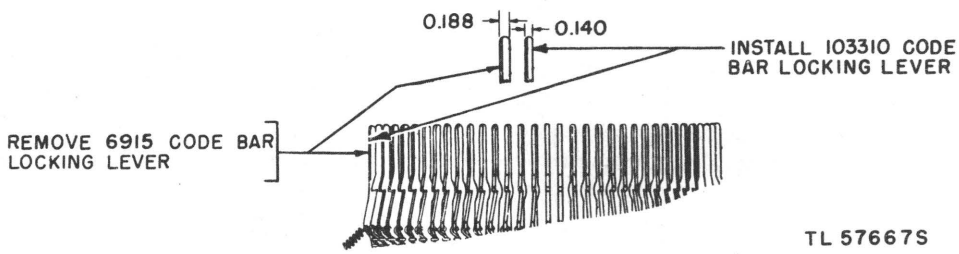

Figure 323. Code bar locking lever.

d. NEW TYPE-BAR BACKSTOP WITH GUARD (FIG. 324). This feature requires the following parts:

Quan.	Signal Corps stock No.	Description of part
1	4T98479	Guard
2	4T74986	Screw
2	4T2191	Lockwasher
8	4T7002	Washer
2	4T103341	Backstop bracket

e. SOFTER ACTING MAIN BAIL CAM AND NEW MAIN BAIL SPRING. These features require the following parts:

Quan.	Signal Corps stock No.	Description of part
1	4T101436	Main bail cam (fig. 325)
1	4T101083	Main bail spring (fig. 327)

f. SOFTER ACTING PUNCH CAM AND NEW FEED PAWL SPRING. These features require the following parts:

Quan.	Signal Corps stock No.	Description of part
1	4T95460	Punch cam (fig. 325)
1	4T7603	Feed pawl spring (fig. 328)

807975 O - 48 - 23

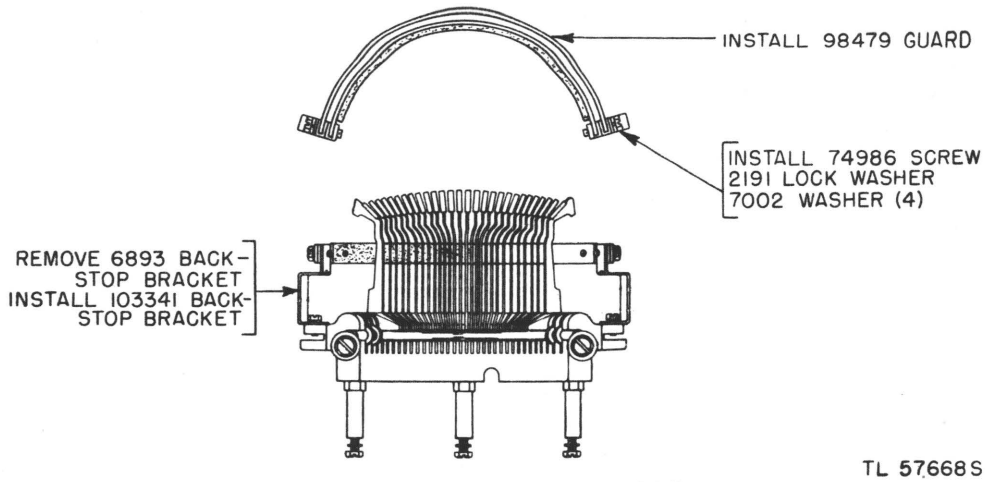

Figure 324. Backstop bracket.

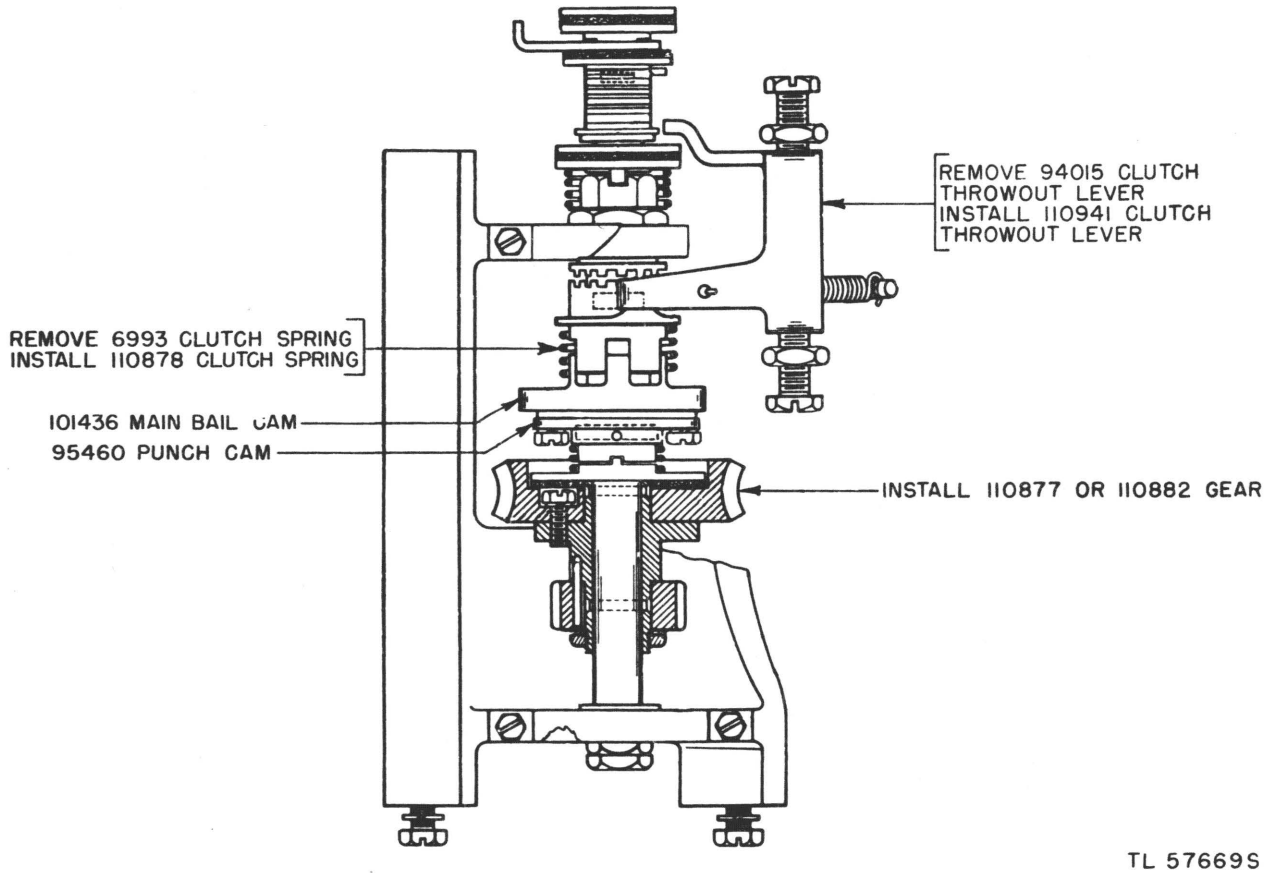

Figure 325. Clutch mechanism.

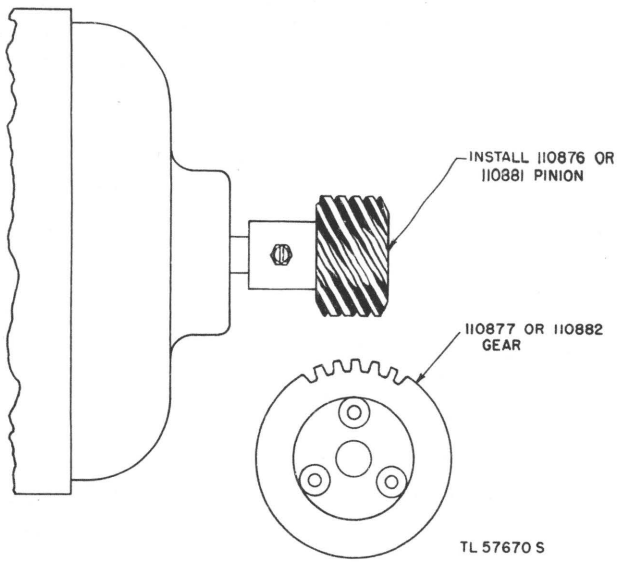

Figure 326. Motor pinion and gear.

g. TYPE PALLETS WITH BROADER CHARACTERS TO REDUCE CUTTING OF TAPE AND TO OVERCOME EXCESSIVE PLATEN WEAR. This feature requires the following parts:

Quan.	Signal Corps stock No.	Description of part
1	4T98910	Type pallet (V;), required only with a nonfraction type arrangement
1	4T98912	Type pallet (A)
1	4T98917	Type pallet (I8)

4. Installation of Parts

The installation of conversion parts should be performed in the following sequence:

a. Install the gear and pinion furnished in place of the present gear and pinion (figs. 325 and 326).

b. Install the 4T110878 clutch spring in place of the 4T6993 clutch spring (fig. 325).

c. Install the 4T110879 selector arm spring in place of the 4T90517 selector arm spring (fig. 320).

d. Install the 4T110941 clutch throw-out lever in place of the 4T94015 clutch throw-out lever (fig. 325).

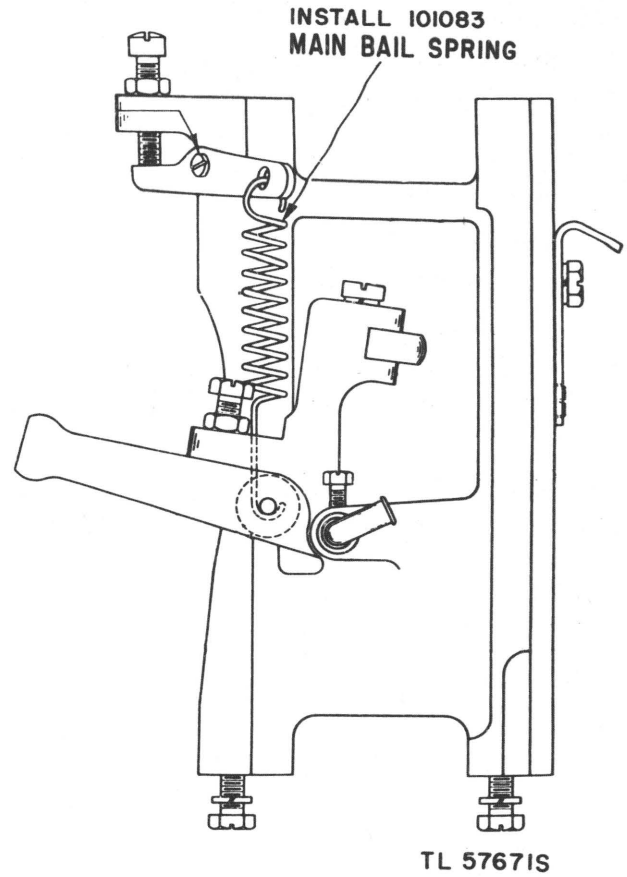

Figure 327. Main bail spring.

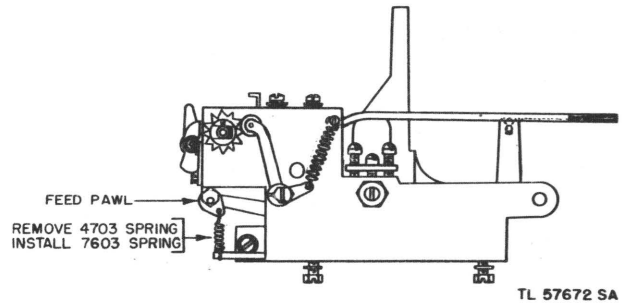

Figure 328. Tape feed mechanism.

e. Install the 4T110880 selector arm detent spring in place of the 4T90510 selector arm detent spring (fig. 320).

f. Install the 4T110871 trip latch in place of the 4T90088 trip latch (fig. 321).

g. Install the 4T110872 trip latch spring in place of the 4T7602 trip latch spring (fig. 321).

h. Install the 4T6850 bell crank in place of the 4T90774 bell crank (fig. 4).

i. Install the 4T71696 range scale in place of the 4T90775 range scale (fig. 4).

j. Install the 4T72563 felt washer between the armature lever cam and the stop arm on the selector cam sleeve assembly.

k. Install the 4T110995 pull bars in place of the 4T6692 pull bars.

l. Install the 4T111686 friction disk in place of the 4T72884 friction disk.

m. Remove and discard the 4T95476 platen and install the 4T111602 platen insert (metal) and then the 4T111603 platen (plastic) in its place.

n. Remove and discard the leather backstop and mounting screws and install the 4T111711 backstop strip (plastic) using the (11) 4T87901 mounting screws in its place.

5. Special Adjustments and Spring Tension Requirements

Standard adjustments for the typing reperforator apply except for the following changes:

	New Requirements
a. Selector arm stop detent spring tension	6¾ to 7¾ ozs.
b. Armature spring tension	24 to 26 ozs.
c. Selector arm spring tension	2¾ to 3¼ ozs.
d. Trip latch spring compression	3 to 3½ ozs.
e. Selector clutch torque	18 to 22 ozs.
f. Main shaft clutch spring tension	52 to 64 ozs.
g. Selector separator plates adjustment	0.050 inch to 0.060 inch

INDEX

	Paragraph	Page
Abbreviations, list	App. I	265
Adjusting-nut tightness adjustment (tape feed-out relay)	206	154
Adjusting-stud clearance adjustment (tape feed-out relay)	205	154
Adjustment and repair procedure, outline of:		
Model 14 nontyping reperforator	393	218
Model 14 typing reperforator	63	64
Adjustments and checks:		
Physical	22	25
Preoperational:		
Model 14 nontyping reperforator	373	206
Model 14 typing reperforator	28	28
Adjustments and requirements:		
Adjusting-nut tightness (tape feed-out relay)	206	154
Adjusting-stud clearance (tape feed-out relay)	205	154
Armature:		
Locking-lever spring tension (holding magnet selector)	248	167
Locking-lever spring tension (pulling magnet selector):		
Model 14 nontyping reperforator	452	250
Model 14 typing reperforator	235	162
Locking-wedge (holding magnet selector)	247	167
Locking-wedge (pulling magnet selector):		
Model 14 nontyping reperforator	451	249
Model 14 typing reperforator	234	162
Pivot screw (holding magnet selector)	243	164
Spring tension (holding magnet selector)	254	169
Stop (pulling magnet selector):		
Model 14 nontyping reperforator	450	249
Model 14 typing reperforator	233	162
Travel (tape feed-out relay)	207	154
Trip-off eccentric screw (pulling magnet selector):		
Model 14 nontyping reperforator	456	251
Model 14 typing reperforator	240	164
Backspace:		
Feed-pawl spring tension	350	193
Lever spring tension	349	193
Bell	177	146
Bell-hammer:		
Eccentric screw	339	191
Extension stop	178	146
Post	338	191
Spring tension	179	147
Cam-lever spring tension (end-of-line indicator)	334	190
Checking and adjusting, preparation for:		
Model 14 nontyping reperforator	443	246
Model 14 typing reperforator	172	144
Clutch spring compression (transmitting shaft)	190	149
Clutch throw-out lever (main shaft) contact mechanism	252; 253	168
Clutch throw-out lever (transmitting shaft)	189	149
Eccentric	193	149
Spring tension	195	150
Code-bar bell cranks	291	178
Contact (tape feed-out relay)	211	154
Bracket (end-of-line indicator)	343	192
Bracket position (main-shaft clutch throw-out lever)	353	194
Levers compression spring (transmitting cam)	186	148
Sequence (tape feed-out relay)	210	154

Adjustments and requirements:—Continued:	Paragraph	Page
Contact spring:		
Adjustment for break operation (control relay)	201	152
Adjustment for make operation (control relay)	202	152
Adjustments (line and selector circuit closing jack)	203	153
Adjustments (main-shaft clutch throw-out lever)	352	194
Position (tape feed-out relay)	204	153
Starting-switch, tension	491b	260
Tension (tape feed-out relay)	208	154
Disk (inner and outer) contact spring:		
Model 14 nontyping reperforator	487	259
Model 14 typing reperforator	217	156
Feed-pawl:		
Eccentric final	298	181
Eccentric preliminary	290	178
Spring tension:		
Backspace mechanism	351	193
End-of-line indicator	347	193
Feed-roll:		
Bearings	287	177
Detent final	297	181
Detent lever spring tension	307	183
Detent preliminary	289	178
End-play	472	255
Figures pull-bar	314	184
Function-bar spring brackets	261	171
Function pull-bar spring bracket:		
Left	282	176
Right	283	176
Gear guard	176	146
Governor:		
Adjusting bracket:		
Model 14 nontyping reperforator	490	260
Model 14 typing reperforator	220	157
Brush spring plate bracket:		
Model 14 nontyping reperforator	488	259
Model 14 typing reperforator	218	157
Brush spring pressure:		
Model 14 nontyping reperforator	489	259
Model 14 typing reperforator	219	157
Shell	215	156
Shim	221	158
Holding magnet selector unit:		
Armature spring tension	254	169
Locking-lever spring	248	167
Selector-arm spring	256	170
Selector-arm stop detent spring	250	167
Selector-lever spring	251	168
Stop-lever spring	259	170
Trip-latch spring	258	170
Intermediate pawl eccentric	192	149
Keylever spring	197	150
Lamp contact (end-of-line indicator)	342	192
Line relay	493	263
Line and selector circuit-closing jack contact spring	203	153
Line-shorting jack spring	199	151
Lock-bar eccentric bushing	212	155
Lock-bail:		
Position	468	255
Spring tension	470	255
Locking lever:		
Shaft	184	147
Spring tension	248	167

	Paragraph	Page
Adjustments and requirements—Continued:		
Travel	185	147
Locking-pawl spring tension	181	147
Locking-wedge (*See* Armature locking wedge adjustments.)		
Lock-loop:		
Roller	191	149
Spring tension	182	147
Magnet:		
Bracket	457	252
Coil	458	252
Main-bail:		
Adjusting screw final	292	179
Adjusting screw preliminary	265	173
Cam clutch torque	316	184
Roller guide	263	171
Spring tension	315	184
Main-shaft:		
Adjustment:		
Model 14 nontyping reperforator	445	247
Model 14 typing reperforator	224	158
Clutch spring tension:		
Model 14 nontyping reperforator	465	254
Model 14 typing reperforator	222	158
Clutch throw-out lever:		
Model 14 nontyping reperforator	460	252
Model 14 typing reperforator	225	158
Clutch throw-out lever spring tension:		
Model 14 nontyping reperforator	462	253
Model 14 typing reperforator	226	159
Friction-clutch torque	463	253
Motor position:		
Model 14 nontyping reperforator	459	252
Model 14 typing reperforator	227	159
Motor speed	29	29
Platen:		
Shift spring tension	310	183
Yield spring tension	311	183
Procedures:		
Details of:		
Model 14 nontyping reperforator	442	246
Model 14 typing reperforator	171	143
Introduction	170	143
Pull-bar:		
Guide	264	172
Lock-out lever	337	190
Spring tension	262	171
Pulling-magnet selector unit:		
Armature locking-lever spring	235	162
Selector-lever spring	229	159
Stop-lever spring	237	163
Trip-latch spring	238	163
Punch:		
Bell-crank spring tension	309	183
Selector-finger backstop	294	179
Punch-arm:		
Casting	284	176
Shaft	464	254
Spring tension	308	183
Punch-bail:		
End-play	285	177
Front pivot bearing	286	177
Link	295	180

	Paragraph	Page
Adjustments and requirements—Continued:		
Upstop screw	296	180
Punch-hammer:		
Adjusting-nut	467	255
Pivot-screws	471	255
Spring tension	483	257
Push-button contact:		
Gap	335	190
Spring tension	336	190
Range finder	32	33
Relay, line	493	263
Release-bail spring tension (end-of-line indicator)	346	193
Ribbon-check pawl	277	175
Spring pressure	278	175
Ribbon-feed:		
Lever spring tension	276	175
Pawl	279	176
Pawl spring pressure	280	176
Shaft detent-plunger spring compression	275	175
Shaft safety-spring compression	274	175
Ribbon-guide	306	182
Ribbon-lift lever spring tension	348	193
Ribbon-reverse:		
Arm shaft, left	271	173
Arm shaft, right	272	174
Pawl link	273	174
Pawls (right and left) spring tension	281	176
Ribbon-spool:		
Brackets	268	173
Cups	266	173
Shaft compression spring	269	173
Shaft gears	267	173
Shafts slot	270	173
Roller-arm position	469	255
Selector-arm:		
Bracket	246	165
Operating screw	255	169
Pivot screw	245	165
Spring tension	256	170
Stop detent	249	167
Stop detent spring tension	250	167
Selector-armature (pulling magnet):		
Adjustment:		
Model 14 nontyping reperforator	447	247
Model 14 typing reperforator	230	160
Bracket:		
Model 14 nontyping reperforator	449	248
Model 14 typing reperforator	232	161
Bracket link:		
Model 14 nontyping reperforator	448	248
Model 14 typing reperforator	231	160
Bracket link friction	228	159
Selector-clutch torque (perforating assembly):		
Model 14 nontyping reperforator	461	252
Model 14 typing reperforator	317	185
Selector-lever spring tension (holding magnet)	251	168
Selector-lever spring tension (pulling magnet):		
Model 14 nontyping reperforator	446	247
Model 14 typing reperforator	229	159
Selector-magnet	244	164
Bracket (holding)	253	168
Bracket (pulling)	242	164

	Paragraph	Page
Adjustments and requirements—Continued:		
Bracket position (holding)	252	168
Coil (pulling)	241	164
Selector separator plate (receiving mechanism):		
Model 14 nontyping reperforator	444	247
Model 14 typing reperforator	223	158
Shift:		
Bell crank	303	182
Bell-crank guide	304	182
Lever spring tension	312	183
Rocker	305	182
Rocker lever post	302	182
Rocker post	301	182
Signal bell	340	191
Slip-connection spring	198	150
Space-out lever	484	258
Spring tension	485	258
Space-repeat rod	213	155
Spring tension	214	155
Speed-adjusting wheel friction-washer spring pressure:		
Model 14 nontyping reperforator	486	258
Model 14 typing reperforator	216	156
Starting switch:		
Model 14 nontyping reperforator	491	260
Removing or replacing	492	262
Model 14 typing reperforator	354	194
Stop-lever:		
Eccentric screw (pulling magnet)	453	250
Eccentric stud:		
Holding magnet selector	257	170
Pulling magnet selector	236	162
Spring tension:		
Holding magnet selector	259	170
Pulling magnet selector:		
Model 14 nontyping reperforator	454	251
Model 14 typing reperforator	237	163
Stud gap (tape feed-out relay)	209	154
Synchronous motor spring tension	354	194
Tape feed pawl:		
Eccentric	479	257
Spring tension	480	257
Tape feed roll:		
Bearing plate	473	256
Detent final	481	257
Detent preliminary	478	257
Detent spring tension	475	256
Tape feed-out counter-magnet	328	187
Armature contact	330	188
Armature spring tension	323	186
Yoke	329	187
Tape feed-out lever	239	164
Tape feed-out magnet:		
Armature	319	185
Armature spring tension	321	186
Bracket	320	185
Yoke	318	185
Tape guide (model 14 nontyping reperforator)	482	257
Spring (model 14 typing reperforator)	313	183
Tape-out lever:		
Adjusting clamp	174	145
Spring tension	180	147
Tape retaining-arm spring tension	200	151

	Paragraph	Page
Adjustments and requirements—Continued:		
Tape stripper plate:		
Model 14 nontyping reperforator	476	256
Model 14 typing reperforator	299	181
Tape-tension lever:		
Spring tension:		
Model 14 nontyping reperforator	477	256
Model 14 typing reperforator	300	181
Stud:		
Model 14 nontyping reperforator	474	256
Model 14 typing reperforator	288	178
Transfer-lever position	466	254
Transmitting-cam cylinder	183	147
Transmitting-contact:		
Gap	187	148
Spring pressure	188	148
Trip-latch spring compression (holding magnet selector)	258	170
Trip-latch spring compression (pulling magnet selector)		
Model 14 nontyping reperforator	455	251
Model 14 typing reperforator	238	163
Trip-off pawl:		
Eccentric	194	149
Spring tension	196	150
Stop plate	175	145
Trip-off screw (holding magnet selector)	260	171
Universal-bar pilot screw	173	145
Vertical-lever pivot screw	293	179
Worm feed-pawl spring tension (tape counter mechanism)	333	190
Worm-follower (end-of-line indicator)	344	192
Spring tension	332; 345	190; 192
Worm-follower (tape counter mechanism):		
Backstop	331	189
Bail	324	186
Bail spring tension	322	186
Contact bracket	327	187
Contact springs	326	187
Spring tension	332	190
Worm-shaft end-play:		
End-of-line indicator	341	192
Tape counter mechanism	325	187
Alarm, mechanical tape-out	95	89
Alphatbetical index to parts identification illustrations:		
Model 14 nontyping reperforator	App. II	307
Model 14 typing reperforator	App. II	307
Application:		
Model 14 nontyping reperforator	361–363	202
Model 14 typing reperforator	9–14	16–19
Armature:		
Motor:		
Bearings, replacing	144	129
Replacement and repairs, general instructions	140	126
Selector unit:		
Adjustment (pulling magnet):		
Model 14 nontyping reperforator	447	247
Model 14 typing reperforator	230	160
Bracket adjustment (pulling magnet):		
Model 14 nontyping reperforator	449	248
Model 14 typing reperforator	232	161
Bracket-link adjustment (pulling magnet):		
Model 14 nontyping reperforator	448	248
Model 14 typing reperforator	231	160
Bracket-link friction adjustment (pulling magnet)	228	159

	Paragraph	Page
Armature—Continued:		
Locking-lever spring tension adjustment (holding magnet)	248	167
Locking-lever spring tension adjustment (pulling magnet)		
Model 14 nontyping reperforator	452	250
Model 14 typing reperforator	235	162
Locking-wedge adjustment (holding magnet)	247	167
Locking-wedge adjustment (pulling magnet):		
Model 14 nontyping reperforator	451	249
Model 14 typing reperforator	234	162
Pivot screw adjustment (holding magnet)	243	164
Spring tension adjustment (holding magnet)	254	169
Stop adjustment (pulling magnet):		
Model 14 nontyping reperforator	450	249
Model 14 typing reperforator	233	162
Trip-off eccentric screw adjustment (pulling magnet)		
Model 14 nontyping reperforator	456	251
Model 14 typing reperforator	240	164
Tape feed-out relay:		
Travel adjustment	207	154
Assembly and disassembly:		
Model 14 nontyping reperforator	365–368	205
Model 14 typing reperforator	19–23	23–26
Associated equipment tables or shelves, preventive maintenance for	36	37
Auxiliary equipment (1A tape splicer)	59–62	63
Backspace:		
Feed-pawl spring tension adjustment	350	193
Lever spring tension adjustment	349	193
Mechanism:		
Adjustments (*See* Index, paragraph 170.)		
Functioning	100	94
Bar:		
Selector, functioning	73	71
Universal, functioning	74	71
Unshift-on-space pull, functioning	106	96
Base:		
High, description	5b	10
Keyboard:		
Description	2b	3
Functioning	71	68
Preventive maintenance	44	40
Low base, description	4b	5
Receiving-only, preventive maintenance for	45	41
Repairs:		
Model 14 nontyping reperforator	434	241
Model 14 typing reperforator	159	135
Wiring, location of opens in:		
Model 14 nontyping reperforator	414*d*; 417*b*	232; 233
Model 14 typing reperforator	115*e*; 118*b*	115; 117
Bearings	144; 492	129; 262
Bell:		
Adjustment	177	146
Signal, functioning	94	89
Bell-hammer:		
Eccentric screw adjustment	339	191
Extension stop adjustment	178	146
Post adjustment	338	191
Spring tension adjustment	179	147
Brushes, motor:		
Replacing, general instructions	142	128
Surfacing and installing	143	128
Cables, preventive maintenance	39	38

	Paragraph	Page
Cam:		
Lever spring tension adjustment	334	190
Locking, functioning	84	79
Lock-loop, functioning	77	72
Sleeve, transmitting, functioning	72	70
Start-stop, functioning	76	71
Capacitors, testing	113*c*	113
Centrifugal mechanism, removing and replacing	492	262
Charts:		
Keyboard functioning sequence	78	73
Lubrication:		
Model 14 nontyping reperforator	388	214
Model 14 typing reperforator	54	49
Trouble-analysis:		
Model 14 nontyping reperforator	411	228
Model 14 typing reperforator	112	104
Check list, preventive maintenance:		
Model 14 nontyping reperforator	384	210
Model 14 typing reperforator	50	45
Checks and adjustments:		
General preparation for:		
Model 14 nontyping reperforator	443	246
Model 14 typing reperforator	172	144
Motor speed	29	29
Physical	22	25
Preoperational:		
Model 14 nontyping reperforator	373	206
Model 14 typing reperforator	28	28
Circuit:		
Analysis:		
Model 14 nontyping reperforator	408	226
Model 14 typing reperforator	108	96
Connections during repair:		
Model 14 nontyping reperforator	425	237
Model 14 typing reperforator	130	122
Continuity tests:		
Model 14 nontyping reperforator	416	233
Model 14 typing reperforator	117	117
Dummy	113*e*; 116; 415*d*	113; 115; 233
Receive:		
Isolation of trouble in:		
Model 14 nontyping reperforator	415	233
Model 14 typing reperforator	116	115
Localization of trouble in:		
Model 14 nontyping reperforator	417	233
Model 14 typing reperforator	119	118
Send	118	117
Signal:		
Model 14 nontyping reperforator	372	206
Model 14 typing reperforator	27	28
Cleaning procedures:		
General, special instructions:		
Model 14 nontyping reperforator	428	238
Model 14 typing reperforator	134	124
Motor, special instructions	139	126
Clutch, driven and driving:		
Main-shaft:		
Model 14 nontyping reperforator	399	220
Model 14 typing reperforator	85	80
Transmitting-shaft	71*b*; 72	69; 70
Clutch-spring (transmitting-shaft clutch) compression adjustment	190	149

	Paragraph	Page
Clutch throw-out lever (main-shaft):		
Contact mechanism:		
Adjustments	252; 253	168
Functioning	99	94
Contact spring adjustments	352	194
Function	85	80
Lever contacts (FPR21 only), preoperational checks and adjustments	28*c*	29
Spring tension adjustment:		
Model 14 nontyping reperforator	462	253
Model 14 typing reperforator	226	159
Trouble check:		
Model 14 nontyping reperforator	420*c*	236
Model 14 typing reperforator	122*c*	120
Clutch throw-out lever (transmitting shaft):		
Adjustment	189	149
Eccentric adjustment	193	149
Functioning	71*b*; 72*a*; 74	69; 70; 71
Spring tension adjustment	195	150
Trouble check	123	120
Code bar	86	82
Bell crank adjustment	291	178
Locking lever, functioning	87	82
Removal	161*e*	136
Code designations for equipment	1*d*	1
Code, teletypewriter	16	20
Commutators, motor, resurfacing	141	128
Components, table of:		
Model 14 nontyping reperforator	359	200
Model 14 typing reperforator	7	11
Connections:		
General:		
Model 14 nontyping reperforator	369	206
Model 14 typing reperforator	24	27
Ground, for testing during repairs	131	123
Signal circuit, during repairs		
Model 14 nontyping reperforator	425	237
Model 14 typing reperforator	130	122
Contact:		
Adjustment (tape feed-out relay)	211	154
Bracket adjustment (end-of-line indicator)	343	192
Bracket position adjustment (main-shaft clutch throw-out lever)	353	194
Levers (transmitting unit)	72; 75; 76*a*	70; 71
Compression spring adjustment	186	148
Points, governor:		
Repair	149	132
Replacement	148	131
Sequence adjustment (tape feed-out relay)	210	154
Contact spring:		
Adjustment for break operation (control relay)	201	152
Adjustment for make operation (control relay)	202	152
Adjustment (main-shaft clutch throw-out lever)	352	194
Disk (inner and outer) adjustment:		
Model 14 nontyping reperforator	487	259
Model 14 typing reperforator	217	156
Position adjustment (tape feed-out relay)	204	153
Tension adjustment:		
Starting switch	491*b*	260
Tape feed-out relay	208	154
Contacts, clutch lever (FPR21), preoperational check and adjustments	28*c*	29
Container, tape	159*e*	135
Continuity tests, circuit:		
Model 14 nontyping reperforator	416	233

	Paragraph	Page
Continuity tests, circuit—Continued:		
Model 14 typing reperforator	117	117
Using Test Unit I-236	114*c*	114
Cords:		
Model 14 nontyping reperforator	369*b*	206
Model 14 typing reperforator	24	27
Preventive maintenance for	39	38
Testing for trouble in:		
Model 14 nontyping reperforator	414*b*	232
Model 14 typing reperforator	115*b*	114
Cover:		
Repair and replacement:		
Model 14 nontyping reperforator	435	242
Model 14 typing reperforator	167	141
Crosses, location of:		
Model 14 nontyping reperforator	414*e*	232
Model 14 typing reperforator	115*f*	115
Description:		
Model 14 nontyping reperforator	355–359	199–200
Model 14 typing reperforator	1–7	1–11
Differences in models:		
Model 14 nontyping reperforator	358	200
Model 14 typing reperforator	7	11
Disassembly:		
General:		
Model 14 nontyping reperforator	427	238
Model 14 typing reperforator	133	123
Governor	147	131
Motor	138	126
Principal units:		
Model 14 nontyping reperforator	426	237
Model 14 typing reperforator	132	123
Subassemblies:		
Model 14 nontyping reperforator	437	242
Model 14 typing reperforator	161	136
Disassembly and repacking:		
Model 14 nontyping reperforator	368	205
Model 14 typing reperforator	23	26
Disk (inner and outer) contact spring adjustment:		
Model 14 nontyping reperforator	487	259
Model 14 typing reperforator	217	156
Driven and driving clutch:		
Main-shaft	85	80
Transmitting shaft	71*b*; 72	69; 70
Dummy circuit	113*e*; 116; 415*d*	113; 115; 233
Emergency repairs:		
Model 14 typing reperforator	432	241
Model 14 nontyping reperforator	169	141
End-of-line indicator mechanism:		
Adjustments:		
Contact bracket	343	192
Lamp contact	342	192
Worm follower	344	192
Worm-shaft end play	341	192
Functioning	98	93
Export shipment, packaging data for:		
Model 14 nontyping reperforator	360	200
Model 14 typing reperforator	8	12
Feed-pawl:		
Eccentric adjustment:		
Final	298	181

	Paragraph	Page
Feed-pawl—Continued:		
Preliminary	290	178
Preoperational checks and adjustments	28d	29
Spring tension:		
Backspace mechanism	351	193
End-of-line indicator	347	193
Feed-roll:		
Bearings adjustment	287	177
Detent adjustment:		
Final	297	181
Preliminary	289	178
Detent-lever spring tension adjustment	307	183
End-play adjustment	472	255
Figures pull-bar adjustment	314	184
FPR5:		
Description	3	4
Signal-circuit connections during repairs	130*b*	123
Workbench operation, connections	129*c*	122
FPR17:		
Description	2	3
Signal-circuit connections during repairs	130*a*	123
Workbench operation, connections	129*b*	122
FPR21:		
Description	4	5
Signal-circuit connections during repairs	130*b*	123
Workbench operation, connections	129*c*	122
FPR23:		
Description	5	9
Signal-circuit connections during repairs	130*b*	123
Workbench operation, connections	129*c*	122
Function-bar spring bracket adjustment	261	171
Function pull-bar spring bracket adjustment:		
Left	282	176
Right	283	176
Functioning:		
Back-space mechanism	100	94
Clutch throw-out contact mechanism	99	94
Code-bar locking lever	87	82
End-of-line indicator mechanism, mechanical	98	93
General:		
Model 14 nontyping reperforator	364	203
Model 14 typing reperforator	15	19
Governor	69	66
Introduction to detailed functioning of equipment:		
Model 14 nontyping reperforator	395	218
Model 14 typing reperforator	65	64
Keyboard base (transmitting unit)	71	68
Keyboard functioning, sequence chart	78	73
Keyboard lock-out	103	96
Line and selector circuit-closing jack	102	96
Line relay	101	95
Locking cam and locking lever:		
Lock-loop cam	77	72
Model 14 nontyping reperforator	403	223
Model 14 typing reperforator	84	79
Main-shaft assembly:		
Model 14 nontyping reperforator	399	220
Model 14 typing reperforator	70	67
Main-shaft clutch throw-out lever:		
Model 14 nontyping reperforator	404	223
Model 14 typing reperforator	85	80
Motor unit	68; 398	65; 220

	Paragraph	Page
Functioning—Continued:		
Operation, basic principles	67	65
Perforator mechanism (model 14 nontyping reperforator)	405	224
Polar-neutral key	107	96
Printing mechanism	86	82
Printing suppression on lower case BLANK selection	105	96
Range finder	83	77
Ribbon-feed mechanism	90	84
Ribbon-reverse mechanism	91	85
Selecting cycle, overlap with printing or function cycle	92	86
Selector bars	73	71
Selector unit:		
Model 14 nontyping reperforator	400; 401	220; 222
Model 14 typing reperforator	81; 82	73; 76
Signal bell	94	89
Space-out lever	407	226
Space-repeat	79	73
Spacing (on tape)	89	84
Start-stop cam	76	71
Suppressors, radio-frequency induction	104	96
Tape-feeding mechanism	406	226
Tape feed-out control mechanism	97	91
Tape feed-out lever, magnet-operated	96	90
Tape-out alarm, mechanical	95	89
Tape-perforating mechanism (model 14 typing reperforator)	88	82
Transmitting and receiving mechanisms	17	21
Transmitting-cam sleeve	72	70
Typing reperforator unit	80	73
Universal bar	74	71
Unshift-on-space pull bar	106	96
Upper and lower case shift mechanism	93	88
Vertical locking levers	75	71
Gear guard adjustment	176	146
Glossary	App. I	265
Governor	69	66
Adjusting bracket adjustment:		
Model 14 nontyping reperforator	490	260
Model 14 typing reperforator	220	157
Brush spring plate bracket adjustment:		
Model 14 nontyping reperforator	488	259
Model 14 typing reperforator	218	157
Brush spring pressure adjustment:		
Model 14 nontyping reperforator	489	259
Model 14 typing reperforator	219	157
Brushes, repair and replacement	152	133
Contact disks: inspection, cleaning and repair	151	133
Contact points:		
Repair	149	132
Replacing	148	131
Disassembly	147	131
Open governor contacts, testing for:		
Model 14 nontyping reperforator	414*c*	232
Model 14 typing reperforator	115	114
Reassembly	150	132
Repairs	146	130
Shell adjustment	215	156
Shim adjustment	221	158
Testing repaired governors	153	134
Grease, method of applying	52*b*	47
Grounds:		
Connection for testing during repairs	131	123
Model 14 nontyping reperforator	371	206

	Paragraph	Page
Grounds—Continued:		
Model 14 typing reperforator	26	28
Testing for	115*g*; 118*e*	115; 118
Guide comb	294	179
Holding magnet selector unit	81*b*	74
Index:		
Parts identification illustrations, alphabetical:		
Model 14 nontyping reperforator	App. I	265
Model 14 typing reperforator	App. I	265
Parts identification illustrations, numerical:		
Model 14 nontyping reperforator	App. I	265
Model 14 typing reperforator	App. I	265
Trouble-analysis charts:		
Model 14 nontyping reperforator	411	228
Model 14 typing reperforator	112	104
Indicator, end-of-line	98	93
Induction suppressors, radio-frequency	104	96
Inspection:		
Preparation for preventive maintenance:		
Model 14 nontyping reperforator	380	209
Model 14 typing reperforator	38	38
Procedure for major repairs:		
Model 14 nontyping reperforator	429	239
Model 14 typing reperforator	135	124
Installing:		
Ribbon in typing reperforator	30	31
Tape:		
In nontyping reperforator	375	207
In typing reperforator	31	31
Intermediate-pawl eccentric adjustment	192	149
Key, polar-neutral	107	96
Keyboard:		
Base:		
Functioning	71	68
Lubrication	54*b*, *c*	49
Preventive maintenance	44	40
Repairs	154	134
Transmitter contacts, repair or replacement	158	134
Transmitter shaft, cam sleeve, and clutches, replacement of	157	134
Transmitter shaft driven gear, replacement of	156	136
Functioning, sequence chart for	78	73
Lock-out, functioning	103	96
Keylever spring adjustment	197	150
Keys:		
Preventive maintenance	41	39
Tops, replacing	155	134
Lamp contact adjustment	342	192
Lever:		
Code-bar locking, functioning	87	82
Keyboard lock-out, functioning	103	96
Locking, functioning	84	79
Shaft adjustment	184	147
Spring tension adjustment	248	167
Travel adjustment	185	147
Main-shaft clutch throw-out, functioning	85	80
Contact mechanism, functioning	99	94
Tape feed-out, functioning	96	90
Tape-out, repair of	159*e*	135
Vertical locking, functioning of	75	71
Line and selector circuit-closing jack, functioning	102	96
Contact spring adjustment	203	153

807975 O - 48 - 24

	Paragraph	Page
Line relay:		
Adjustment	493	263
Functioning	101	95
Line-shorting jack spring adjustment	199	151
Line Unit BE-77, setting up test circuit with	415*d*	233
Line voltage, testing:		
Model 14 nontyping reperforator	414*a*	232
Model 14 typing reperforator	115*a*	114
Localization of trouble:		
Circuit:		
Continuity tests:		
Model 14 nontyping reperforator	416	233
Model 14 typing reperforator	117	117
Receive:		
Model 14 nontyping reperforator	417	233
Model 14 typing reperforator	119	118
Send	118	117
Electrical	113	112
Power trouble:		
Model 14 nontyping reperforator	414	232
Model 14 typing reperforator	115	114
Use of Test Unit I–236	114	114
Mechanical:		
Model 14 nontyping reperforator	418	235
Model 14 typing reperforator	120	119
Reperforator:		
Doesn't start:		
Model 14 nontyping reperforator	419	235
Model 14 typing reperforator	121	119
Scrambles letters and functions:		
Model 14 nontyping reperforator	421	236
Model 14 typing reperforator	124	120
Transmitter runs open	123	120
Unit runs open:		
Model 14 nontyping reperforator	420	235
Model 14 typing reperforator	122	119
Test circuit:		
Setting up:		
Model 14 nontyping reperforator	415	233
Model 14 typing reperforator	116	115
Testing with:		
Model 14 nontyping reperforator	422	236
Model 14 typing reperforator	125	120
Locating pins, repair	159*e*	135
Lock-bail:		
Position adjustment	468	255
Spring tension adjustment	470	255
Lock-bar eccentric bushing adjustment	212	155
Lock-loop:		
Cam, functioning	77	72
Roller adjustment	191	149
Spring tension adjustment	182	147
Locking:		
Cam and lever, functioning	84	79
Lever, code-bar, functioning	87	82
Pawl spring tension adjustment	181	147
Wedge adjustment	247	167
Lock-out:		
Keyboard	103	96
Lever	94	89

	Paragraph	Page
Lubrication:		
Charts:		
Model 14 nontyping reperforator	388	214
Model 14 typing reperforator	54	49
Instructions:		
Model 14 nontyping reperforator	386	211
Model 14 typing reperforator	52	47
Lubricants:		
Model 14 nontyping reperforator	385	211
Model 14 typing reperforator	51	47
Preparation for:		
Model 14 nontyping reperforator	387	213
Model 14 typing reperforator	53	48
Magnet:		
Bracket adjustment	457	252
Coil adjustment	458	252
Main-bail:		
Adjusting screw adjustment:		
Final	292	179
Preliminary	265	173
Cam clutch torque adjustment	316	184
Lubrication	54*e*	56
Removal	161*g*	137
Roller guide adjustment	263	171
Spring tension adjustment	315	184
Main-shaft:		
Adjustment:		
Model 14 nontyping reperforator	445	247
Model 14 typing reperforator	224	158
Assembly, functioning:		
Model 14 nontyping reperforator	399	220
Model 14 typing reperforator	70	67
Clutch:		
Spring tension adjustment:		
Model 14 nontyping reperforator	465	254
Model 14 typing reperforator	222	158
Throw-out lever adjustment:		
Model 14 nontyping reperforator	460	252
Model 14 typing reperforator	225	158
Throw-out lever, functioning	85	80
Throw-out lever spring tension adjustment	226	159
Trouble-location in throw-out lever:		
Model 14 nontyping reperforator	420*c*	236
Model 14 typing reperforator	122*c*	120
Friction-clutch torque adjustment	463	253
Lubrication:		
Model 14 nontyping reperforator	388*b*	215
Model 14 typing reperforator	54*e*	56
Removing and inspecting:		
Model 14 nontyping reperforator	439	243
Model 14 typing reperforator	164	137
Repairing and replacing:		
Model 14 nontyping reperforator	431*b*; 440	240; 245
Model 14 typing reperforator	164	137
Maintenance parts for model 14 typing and nontyping reperforators	App. II	307
Maintenance, preventive:		
Model 14 nontyping reperforator	377–384	208–210
Model 14 typing reperforator	33–50	35–45
Materials and tools, preventive maintenance	48	44
Mechanical troubles, localization		
Model 14 nontyping reperforator	418–421	235–236
Model 14 typing reperforator	120–124	119–120

	Paragraph	Page
Message tapes:		
Model 14 nontyping reperforator	357	200
Model 14 typing reperforator	6	11
Model 14 nontyping reperforator:		
Application	361–364	202–203
Assembly and disassembly	365–368	205
Description	355–360	199–200
Detailed functioning	395–408	218–226
General functioning	364	203
Lubrication	385–388	211–214
Moistureproofing and fungiproofing	389–392	216
Operating instructions	369–376	206–207
Preventive maintenance	377–384	208–210
Repairs	423–440	236–245
Requirements and adjustments	441–492	246–262
Trouble shooting	410–422	228–236
Model 14 typing reperforator:		
Application	9–18	16–21
Assembly and disassembly	19–23	23–26
Description	1–7	1–11
Detailed functioning	65–108	64–96
General functioning	14	19
Lubrication	51–54	47–49
Moistureproofing and fungiproofing	55–58	61–62
Operating instructions	24–32	27–33
Preventive maintenance	33–50	35–45
Repairs	126–169	121–141
Requirements and adjustments	170–354	143–194
Trouble shooting	111–125	102–120
Model 19 teletypewriter sets, use of model 14 as monitor for	13;363	18;202
Models, differences in:		
Model 14 nontyping reperforator	358	200
Model 14 typing reperforator	7	11
Moistureproofing and fungiproofing:		
General	55	61
Reducing failures	56	61
Treating equipment after repairs:		
Model 14 nontyping reperforator	392	216
Model 14 typing reperforator	58	62
Treating nontyping reperforators	391	216
Treating typing reperforators	57	61
Monitoring:		
Model 14 nontyping reperforator	356;363	200;202
Model 14 typing reperforator	13	18
Motor:		
Armature:		
Bearings, lubrication	54*f*	61
Bearings, replacing	144	129
Repair and replacement, general instructions	140	126
Brushes:		
Replacing, general instructions	142	128
Surfacing and installing	143	128
Cleaning instructions, special	139	126
Commutators, resurfacing	141	128
Differences:		
Model 14 nontyping reperforators	358	200
Model 14 typing reperforator	7	11
Disassembly	138	126
Functioning	68	65
Governor	69	66
Lubrication	54*a*	48

	Paragraph	Page
Motor—Continued:		
Position adjustment:		
Model 14 nontyping reperforators	459	252
Model 14 typing reperforator	227	159
Preoperational checks and adjustments:		
Model 14 nontyping reperforators	373b	207
Model 14 typing reperforator	28b	28
Preventive maintenance	46	41
Reassembly:		
Model 14 nontyping reperforators	431c	240
Model 14 typing reperforator	145	130
Removing motor unit	132c	123
Repairs	137	125
Speed, checking and adjusting	29	29
Starting-switch:		
Adjustments:		
Model 14 nontyping reperforator	491	260
Model 14 typing reperforator	354	194
Removing and replacing	492	262
Synchronism	18	21
Types:		
Model 14 nontyping reperforator	370c	206
Model 14 typing reperforator	25c	28
Voltage, testing at motor terminals	115c	114
Multimeter TS-380/U	109d	99
Numerical index to parts identification illustrations:		
Model 14 nontyping reperforator	App. II	307
Model 14 typing reperforator	App. II	307
Oil, methods of applying	52c	48
Opens, location of:		
Model 14 nontyping reperforator	417	233
Model 14 typing reperforator	119	118
Operation, basic principles	67	65
Orientation of selecting mechanism	83, 402	77, 223
Overhaul, operation of equipment during	128	121
Packaging data, export shipment:		
Model 14 nontyping reperforator	360	200
Model 14 typing reperforator	8	12
Packing cases:		
Domestic, unpacking	20	24
Overseas, unpacking	19	23
Repacking:		
Model 14 nontyping reperforator	368	205
Model 14 typing reperforator	23	26
Painting and refinishing:		
Model 14 nontyping reperforator	433	241
Model 14 typing reperforator	168	141
Parts identification illustrations:		
Model 14 nontyping reperforator	App. II	307
Model 14 typing reperforator	App. II	307
Parts lists	App. I	265
Parts, maintenance, for model 14 typing and nontyping reperforators	App. I	265
Perforating mechanism:		
Functioning:		
Model 14 nontyping reperforator	405	224
Model 14 typing reperforator	88	82
Lubrication:		
Model 14 nontyping reperforator	388c	215
Model 14 typing reperforator (*See* Reperforator)	54e	56

	Paragraph	Page
Perforating mechanism—Continued:		
Removal:		
Model 14 nontyping reperforator	437*d*	242
Model 14 typing reperforator (*See* Reperforator)	161*f*	136
Replacing	431*d*	240
Pins, locating, repair of	159*e*	135
Platen:		
Functioning	93	88
Lubrication	54*e*	56
Shift spring tension adjustment	310	183
Yield spring tension adjustment	311	183
Polar-neutral key	107	96
Polar relays, preventive maintenance for	47	41
Power cord and plug, testing trouble in		
Model 14 nontyping reperforator	414*b*	232
Model 14 typing reperforator	115*b*	114
Power supply:		
Model 14 nontyping reperforator	370	206
For workbench testing	425*b*	237
Model 14 typing reperforator	25	27
For workbench testing	129	122
Power trouble, electrical:		
Model 14 nontyping reperforator	414	232
Model 14 typing reperforator	115	114
Preoperational checks and adjustments:		
Model 14 nontyping reperforator	373	206
Model 14 typing reperforator	28	28
Preventive maintenance:		
1A tape splicer	61	63
Base (receiving-only)	45	41
Check list:		
Model 14 nontyping reperforator	384	210
Model 14 typing reperforator	50	45
Cords, cables, and wiring	39	38
Exterior:		
Model 14 nontyping reperforator	379	208
Model 14 typing reperforator	37	37
Inspection, preparation for:		
Model 14 nontyping reperforator	380	209
Model 14 typing reperforator	38	38
Keyboard base	44	40
Keys and switches	41	39
Meaning	33	35
Motor unit	46	41
Polar relays	47	41
Procedure, introduction to:		
Model 14 nontyping reperforator	378	208
Model 14 typing reperforator	35	37
Reporforator unit:		
Model 14 nontyping reperforator	381	209
Model 14 typing reperforator	42	39
Schedule and records	49	44
Tables or shelves, associated equipment	36	37
Techniques, description	34	35
Terminal blocks and slip connections	40	39
Tools and materials	48	44
Type basket	43	40
Principal units:		
Removing:		
Model 14 nontyping reperforator	426	237
Model 14 typing reperforator	132	123

	Paragraph	Page
Principles of operation, basic:		
Model 14 nontyping reperforator	397	219
Model 14 typing reperforator	67	65
Printing cycle, overlap with select cycle	92	86
Printing mechanism, functioning of	86	82
Printing-suppression mechanism	105	96
Pull-bar:		
Guide adjustment	264	172
Lock-out lever adjustment	337	190
Spring tension adjustment	262	171
Pulling magnet selector unit	81*a*	73
Punch:		
Bell-crank spring tension adjustment	309	183
Block, repair	166	140
Selector-finger backstop adjustment	294	179
Punch arm:		
Cam:		
Model 14 nontyping reperforator	401;404	222;223
Model 14 typing reperforator	70;85;88	67;80;82
Casting adjustment	284	176
Shaft adjustment	464	254
Spring tension adjustment	308	183
Punch-bail:		
End-play adjustment	285	177
Front pivot bearing adjustment	286	177
Link adjustment	295	180
Upstop screw adjustment	296	180
Punch-hammer:		
Adjusting-nut adjustment	467	255
Pivot-screws adjustment	471	255
Spring tension adjustment	483	257
Punches	88	82
Push-button contact:		
Gap adjustment	335	190
Spring tension adjustment	336	190
Radio-frequency induction suppressors	104	96
Range finder:		
Disassembly and removal:		
Model 14 nontyping reperforator	437*a*	242
Model 14 typing reperforator	161*a*	136
Functioning	83	77
Setting	32	33
Reassembly:		
General:		
Model 14 nontyping reperforator	427	238
Model 14 typing reperforator	136	125
Governor	150	132
Motor	145	130
Subassemblies:		
Model 14 nontyping reperforator	438	243
Model 14 typing reperforator	163	137
Receive circuit:		
Isolation of trouble:		
Model 14 nontyping reperforator	415	233
Model 14 typing reperforator	116	115
Localization of trouble:		
Model 14 nontyping reperforator	417	233
Model 14 typing reperforator	119	118
Receiving and transmitting mechanism, functioning of	17	21
Receiving-only base, preventive maintenance for	45	41
Records and schedules, preventive maintenance	49	44

	Paragraph	Page
Relay:		
Adjustments	493	263
Circuits	408	226
Line, functioning	101	95
Polar, preventive maintenance	47	41
Release-bail spring tension adjustment	346	193
Removing principal units, instructions:		
Model 14 nontyping reperforator	426	237
Model 14 typing reperforator	132	123
Repacking:		
Model 14 nontyping reperforator	368	205
Model 14 typing reperforator	23	26
Repair and adjustment procedure, outline:		
Model 14 nontyping reperforator	393	218
Model 14 typing reperforator	63	64
Repairs:		
Base:		
Model 14 nontyping reperforator	434	241
Model 14 typing reperforator	159	135
Circuit connections during repairs:		
Model 14 nontyping reperforator	425	237
Model 14 typing reperforator	130	122
Cleaning procedures, special:		
Model 14 nontyping reperforator	428	238
Model 14 typing reperforator	134	124
Cover:		
Model 14 nontyping reperforator	435	242
Model 14 typing reperforator	167	141
Disassembly procedure:		
Model 14 nontyping reperforator	427	238
Model 14 typing reperforator	133	123
Emergency:		
Model 14 nontyping reperforator	432	241
Model 14 typing reperforator	169	141
General information:		
Model 14 nontyping reperforator	423	236
Model 14 typing reperforator	126	121
Governor:		
Brushes	152	133
Contact disks	151	133
Contact points	148;149	131;132
Disassembly	147	131
Introduction	146	130
Reassembly	150	132
Testing repaired governors	153	134
Ground connection for testing during repairs	131	123
Inspection procedure for major repairs:		
Model 14 nontyping reperforator	429	239
Model 14 typing reperforator	135	124
Introduction, general:		
Model 14 nontyping reperforator	436	242
Model 14 typing reperforator	160	135
Keyboard base:		
Introduction	154	134
Keytops, replacing	155	134
Transmitter contacts	158	134
Transmitter shaft, cam sleeve, and clutches	157	134
Transmitter-shaft driven gear	156	134
Main shaft:		
Removing and inspecting:		
Model 14 nontyping reperforator	439	243
Model 14 typing reperforator	164	137

	Paragraph	Page
Repairs—Continued:		
Repairing and replacing:		
Model 14 nontyping reperforator	440	245
Model 14 typing reperforator	165	138
Moistureproofing and fungiproofing after repairs	58	62
Motor:		
Armature	140;144	126;129
Bearings	144;492	129;262
Brushes	142;143	128
Cleaning instructions, special	139	126
Commutators, resurfacing	141	128
Disassembly	138	126
Introduction	137	125
Reassembly	145	130
Operation of equipment during overhaul	128	121
Painting and refinishing:		
Model 14 nontyping reperforator	433	241
Model 14 typing reperforator	168	141
Punch block	166	140
Reassembly procedure:		
Model 14 nontyping reperforator	430	239
Model 14 typing reperforator	136	125
Relay contacts	47*d*	42
Removing principal units:		
Model 14 nontyping reperforator	426	237
Model 14 typing reperforator	132	123
Replacing principal nontyping reperforator units	431	240
Subassemblies, disassembly:		
Model 14 nontyping reperforator	437	242
Model 14 typing reperforator	161	136
Subassemblies, reassembly:		
Model 14 nontyping reperforator	438	243
Model 14 typing reperforator	163	137
Tape-out lever	159*e*	135
Type bars	162	137
Workbench testing, temporary power supply for:		
Model 14 nontyping reperforator	425*b*	237
Model 14 typing reperforator	129	122
Reperforator distributor, model 14 nontyping reperforator used with	356;362	200;202
Reperforator mechanism, librication:		
Model 14 nontyping reperforator	388*c*	215
Model 14 typing reperforator (see perforating mechanism)	54*e*	56
Reperforator Transmitters TG-26-A and TG-27-A, model 14 typing reperforator used as part of	10	17
Replacing principal units:		
Model 14 nontyping reperforator	431	240
Model 14 typing reperforator	136	125
Report, unsatisfactory equipment	64	64
Requirements and adjustments:		
Model 14 nontyping reperforator	441–492	246–262
Model 14 typing reperforator	170–354	143–194
Requirements and procedures, details:		
Model 14 nontyping reperforator	442	246
Model 14 typing reperforator	171	143
Resistors, testing	113*d*	113
Ribbon:		
Guide adjustment	306	182
Installing in typing reperforator	30	31
Lift lever spring tension adjustment	348	193
Ribbon-check pawl:		
Adjustment	277	175
Spring pressure adjustment	278	175

	Paragraph	Page
Ribbon-feed:		
Lever spring tension adjustment	276	175
Mechanism, functioning	90	84
Pawl:		
Adjustment	279	176
Spring pressure adjustment	280	176
Shaft:		
Safety spring compression adjustment	274	175
Detent-plunger spring compression adjustment	275	175
Ribbon-reverse:		
Arm shaft adjustment:		
Left	271	173
Right	272	174
Mechanism, functioning	91	85
Pawl link adjustment	273	174
Pawls (right and left) spring tension adjustment	281	176
Preoperational tests and adjustments	28*e*	29
Ribbon-spool:		
Brackets adjustments	268	173
Cups adjustment	266	173
Shaft:		
Compression spring adjustment	269	173
Gears adjustment	267	173
Shaft slot adjustment	270	173
Roller-arm position adjustment	469	255
RPE26 nontyping reperforator	355;356	199;200
Schedules and records, preventive maintenance	49	44
Selecting cycle, sequence description	92	86
Selector:		
Bars, functioning of	73	71
Cam sleeve, functioning of	70	67
Clutch torque adjustment:		
Model 14 nontyping reperforator	461	252
Model 14 typing reperforator	317	185
Lever spring tension adjustment:		
Holding magnet	251	168
Pulling magnet:		
Model 14 nontyping reperforator	446	247
Model 14 typing reperforator	229	159
Separator plate adjustment:		
Model 14 nontyping reperforator	444	247
Model 14 typing reperforator	223	158
Trip-off mechanism, location of trouble in	420*b*	236
Selector and line circuit-closing jack, functioning	102	96
Selector-arm:		
Bracket adjustment	246	165
Operating screw adjustment	255	169
Pivot screw adjustment	245	165
Spring tension adjustment	256	170
Stop detent:		
Adjustment	249	167
Spring tension adjustment	250	167
Selector-armature:		
Adjustment (pulling magnet):		
Model 14 nontyping reperforator	447	247
Model 14 typing reperforator	230	160
Bracket adjustment (pulling magnet):		
Model 14 nontyping reperforator	449	248
Model 14 typing reperforator	232	161
Bracket adjustment (pulling magnet):		
Model 14 nontyping reperforator	448	248
Model 14 typing reperforator	231	160
Bracket link friction adjustment (pulling magnet)	228	159

	Paragraph	Page
Selector-magnet:		
Adjustment	244	164
Bracket adjustment (holding)	253	168
Bracket adjustment (pulling)	242	164
Bracket position adjustment (holding)	252	168
Coil adjustment (pulling)	241	164
Selector unit:		
Disassembly and removal:		
Model 14 nontyping reperforator	437*b*	242
Model 14 typing reperforator	161*b*	136
Functioning:		
Model 14 nontyping reperforator	81	73
Model 14 typing reperforator	400	220
Lubrication:		
Model 14 nontyping reperforator	388*a*	214
Model 14 typing reperforator	54*e*	56
Operation of pulling magnet type, example:		
Model 14 nontyping reperforator	401	222
Model 14 typing reperforator	82	76
Power for:		
Model 14 nontyping reperforator	399*b*	220
Model 14 typing reperforator	70*b*	68
Send or receive circuits:		
Isolation of trouble in	116	115
Localization of trouble in	118; 119	117; 118
Sequence chart:		
Figures shift	93	88
Keyboard functioning	78	73
Letters shift	93	88
Printing mechanism	86	82
Selecting mechanism	82	76
Signal bell	94	89
Spacing	89	84
Tape perforation	88	82
Setting range finder	32	33
Setting up character or function, manually:		
Model 14 nontyping reperforator	443*c*	246
Model 14 typing reperforator	172*c*	144
Shaft assembly, main, functioning:		
Model 14 nontyping reperforator	399	220
Model 14 typing reperforator	70	67
Shift:		
Bell-crank adjustment	303	182
Bell-crank guide adjustment	304	182
Lever spring tension adjustment	312	183
Mechanism, functioning of	93	88
Rocker		
Adjustment	305	182
Lever post adjustment	302	182
Post adjustment	301	182
Shorts, location of:		
Model 14 nontyping reperforator	417*c*	234
Model 14 typing reperforator	119*c*	118
Signal:		
Bell:		
Adjustment	340	191
Functioning	94	89
Circuit:		
Model 14 nontyping reperforator	372	206
Model 14 typing reperforator	27	28
Circuit connections during repairs:		
Model 14 nontyping reperforator	425*c*	237
Model 14 typing reperforator	130	122

	Paragraph	Page
Slip-connection:		
Preventive maintenance	40	39
Spring adjustment	198	150
Space-out lever, functioning	407	226
Adjustment	484	258
Spring tension adjustment	485	258
Space-repeat:		
Functioning	79	73
Rod:		
Adjustment	213	155
Spring tension adjustment	214	155
Spacing mechanism (tape), functioning of	89	84
Speed-adjusting wheel friction-washer spring pressure adjustment:		
Model 14 nontyping reperforator	486	258
Model 14 typing reperforator	216	156
Starting switch:		
Adjustments:		
Model 14 nontyping reperforator	491	260
Model 14 typing reperforator	354	194
Removing and replacing (model 14 nontyping reperforator)	492	262
Start-stop cam	76	71
Stop-lever:		
Eccentric screw adjustment (pulling magnet)	453	250
Eccentric stud adjustment:		
Holding magnet	257	170
Pulling magnet	236	162
Spring tension adjustment		
Holding magnet	259	170
Pulling magnet:		
Model 14 nontyping reperforator	454	251
Model 14 typing reperforator	237	163
Stud, adjusting, clearance adjustment	205	154
Stud gap adjustment	209	154
Subassemblies:		
Disassembly and removal:		
Model 14 nontyping reperforator	437	242
Model 14 typing reperforator	161	136
Reassembly, model 14 typing reperforaotr	163	137
Suppression-of-printing mechanism	105	96
Suppressors, radio-frequency induction	104	96
Switchboard BD-100, used as dummy circuit	116*d*	116
Switches, preventive maintenance for	41	39
Swords:		
Model 14 nontyping reperforator	400; 401	220; 222
Model 14 typing reperforator	81; 82; 85; 92	73; 76; 80; 86
Synchronism	18	21
Tables:		
Code designations (equipment)	1d	1
Components:		
Model 14 nontyping reperforator	359	200
Model 14 typing reperforator		
Fixed plant equipment	7	11
Tactical equipment	7	11
Lubricating materials	51	47
Lubrication charts:		
Model 14 nontyping reperforator	388	214
Model 14 typing reperforator	54	49
Motor types and power sources	25	27
Motors, gears, targets; principal differences in		
Model 14 nontyping reperforator	358	200
Model 14 typing reperforator	7	11

Tables—Continued:	Paragraph	Page
Packaging data:		
Model 14 nontyping reperforator	360	200
Model 14 typing reperforator	8	12
Preventive maintenance check list:		
Model 14 nontyping reperforator	384	210
Model 14 typing reperforator	50	45
Preventive maintenance tools and materials	48	44
Selecting cycle	92	86
Tool Equipment TE–50	48	44
Tools, repair (additional to Tool Equipment TE-50)	110	100
Trouble-analysis charts:		
Model 14 nontyping reperforator	411	228
Model 14 typing reperforator	112	104
Tape:		
Container, repairs	159*e*	135
Guide adjustment (model 14 nontyping reperforator)	482	257
Guide spring adjustment (model 14 typing reperforator)	313	183
Installing:		
Model 14 nontyping reperforator	375	207
Model 14 typing reperforator	31	31
Message	6	11
Perforating mechanism, functioning of	88	82
Reel assembly, removal (model 14 nontyping reperforator)	437*c*	242
Reel, preoperational checks and adjustments:		
Model 14 nontyping reperforator	373*d*	207
Model 14 typing reperforator	28*f*	29
Retaining arm spring tension adjustment	200	151
Stripper plate adjustment:		
Model 14 nontyping reperforator	476	256
Model 14 typing reperforator	299	181
Tape-feed:		
Lubrication	54*e*	56
Mechanism:		
Functioning:		
Model 14 nontyping reperforator	406	226
Model 14 typing reperforator	89	84
Preoperational checks and adjustments:		
Model 14 nontyping reperforator	373*e*	207
Model 14 typing reperforator	28*g*	29
Pawl:		
Eccentric adjustment	479	257
Preoperational checks and adjustments	373*c*	207
Spring tension adjustment	480	257
Roll:		
Bearing plate adjustment	473	256
Detent adjustment:		
Final	481	257
Preliminary	478	257
Detent-lever spring tension adjustment	475	256
Tape feed-out:		
Control mechanism, functioning of	97	91
Counter-magnet:		
Adjustment	328	187
Armature contact adjustment	330	188
Armature spring tension adjustment	323	186
Yoke adjustment	329	187
Lever:		
Adjustment	239	164
Magnet-operated, functioning of	96	90
Magnet:		
Armature spring tension adjustment	321	186
Bracket adjustment	320	185
Yoke adjustment	318	185

	Paragraph	Page
Tape-out alarm, mechanical, functioning of	95	89
Tape-out lever:		
Adjusting clamp adjustment	174	145
Repairs	159*e*	135
Spring tension adjustment	180	147
Tape splicer, 1A:		
Description	59	63
Operation	60	63
Preventive maintenance	61	63
References	62	63
Tape-tension lever	89*a*	84
Spring tension adjustment:		
Model 14 nontyping reperforator	477	256
Model 14 typing reperforator	300	181
Stud adjustment:		
Model 14 nontyping reperforator	474	256
Model 14 typing reperforator	288	178
Target	29	29
Technical manuals on test equipment and on equipment associated with model 14 typing reperforator	App. I	265
Technical publications	App. I	265
Teletypewriter code, start-stop five-unit	16	20
Teletypewriter Set AN/TGC-1, model 14 typing reperforator used as part	11	17
Teletypewriter sets, 132 and 133, model 14 typing reperforator used as part	12	18
Teletypewriter systems:		
Model 14 nontyping reperforator used with	361	202
Model 14 typing reperforator used with	14	19
Teletypewriters TT-7/FG and TT-8/FG:		
Model 14 nontyping reperforator used as monitor with	356; 363	200; 202
Model 14 typing reperforator used as monitor with	13	18
Used as test circuit for model 14 nontyping reperforator	422	236
Terminal blocks, preventive maintenance for	40	39
Test circuit:		
Setting up:		
Model 14 nontyping reperforator	415	233
Model 14 typing reperforator	116	115
Testing with:		
Model 14 nontyping reperforator	422	236
Model 14 typing reperforator	125	120
Test equipment:		
Model 14 nontyping reperforator	409	228
Model 14 typing reperforator	109; 110	99; 100
Testing:		
During repairs, ground connection for	131	123
Line voltage:		
Model 14 nontyping reperforator	414*a*	232
Model 14 typing reperforator	115*a*	114
Workbench, temporary power supply for:		
Model 14 nontyping reperforator	425*b*	237
Model 14 typing reperforator	129	122
Test sets:		
Distortion Test Set TS–383–GG	109*c*	99
Multimeter TS–380/U	109*d*	99
Test Set TS–2/TG	109b	99
Test Unit I–236	109*e*; 113; 114	100; 112; 114
Throw-out lever, clutch (main-shaft), contact mechanism adjustments:		
Adjustments	252; 353	168; 194
Functioning of	99	94
T-lever:		
Model 14 nontyping reperforator	400; 401; 405	220; 222; 224
Model 14 typing reperforator	81; 82	73; 76
Tool Equipment TE–50	48	44

	Paragraph	Page
Tools:		
Preventive maintenance	48	44
Repair	110	100
Transfer-lever position adjustment	466	254
Transmitter:		
Clutch throw-out lever, functioning	71*b*; 72*a*; 74	69; 70; 71
Contacts:		
Functioning	17	21
Repair or replacement	158	134
Shaft, cam sleeve, and clutches, replacements of	157	134
Shaft driven gear, replacement of	156	134
Transmitting and receiving mechanisms, functioning of	17	21
Transmitting cam	71*b*; 74*a*	69; 71
Cylinder adjustment	183	147
Sleeve, functioning of	72	70
Transmitting-contact:		
Gap adjustment	187	148
Spring pressure adjustment	188	148
Trip-latch spring compression adjustment:		
Holding magnet selector	258	170
Pulling magnet selector		
Model 14 nontyping reperforator	455	251
Model 14 typing reperforator	238	163
Trip-off:		
Eccentric screw adjustment, armature (pulling magnet selector):		
Model 14 nontyping reperforator	456	251
Model 14 typing reperforator	240	164
Pawl:		
Eccentric adjustment	194	149
Spring tension adjustment	196	150
Stop plate adjustment	175	145
Screw adjustment (holding magnet)	260	171
Trouble-analysis charts:		
Model 14 nontyping reperforator	411	228
Model 14 typing reperforator	112	104
Trouble shooting:		
Circuit continuity tests:		
Model 14 nontyping reperforator	416	233
Model 14 typing reperforator	117	117
Introduction to:		
Model 14 nontyping reperforator	410	228
Model 14 typing reperforator	111	102
Localization of trouble:		
Electrical	113; 114	112; 114
Electrical power:		
Model 14 typing reperforator	414	232
Model 14 nontyping reperforator	115	114
Mechanical:		
Model 14 nontyping reperforator	418	235
Model 14 typing reperforator	120	119
Receive circuit:		
Model 14 nontyping reperforator	417	233
Model 14 typing reperforator	119	118
Send circuit	118	117
Locating trouble:		
When transmitter runs open	123	120
When unit does not start:		
Model 14 nontyping reperforator	419	235
Model 14 typing reperforator	121	119
When unit runs open:		
Model 14 nontyping reperforator	420	235
Model 14 typing reperforator	122	119

	Paragraph	Page
Trouble shooting—Continued:		
When unit scrambles letters and functions:		
Model 14 nontyping reperforator	421	236
Model 14 typing reperforator	124	120
Receive circuits, isolation of trouble in:		
Model 14 nontyping reperforator	415	233
Model 14 typing reperforator	116	115
Testing unit with test circuit:		
Model 14 nontyping reperforator	422	236
Model 14 typing reperforator	125	120
Tuning fork	29	29
Type bars:		
Removal	161*d*	136
Repairing	162	137
Type bars, repairing and replacing	161	136
Type basket:		
Lubrication	54*d*	52
Preventive maintenance for	43	40
Removal	161*c*	136
Universal bar:		
Functioning of	74	71
Pilot screw adjustment	173	145
Unpacking:		
Domestic packing cases	20	24
Overseas packing cases	19	23
Unsatisfactory equipment report	64	64
Unshift-on-space pull bar, functioning of	106	96
Upper-and-lower-case shift mechanism	93	88
Upstop screw	88	82
Vertical lever pivot screw adjustment	293	179
Vertical locking levers, functioning of	75	71
Voltage:		
Checking	114b	114
Line, testing:		
Model 14 nontesting reperforator	414*a*	232
Model 14 typing reperforator	115*a*	114
Wiring:		
Preventive maintenance for	39	38
Testing:		
Model 14 nontesting reperforator	414*d*; 417*b*	232; 233
Model 14 typing reperforator	115*e*; 118*b*	115; 117
Workbench operation, connections:		
Model 14 nontyping reperforator	425*b*	237
Model 14 typing reperforator	129	122
Worm-follower:		
Adjustment	344	192
Backstop adjustment	331	189
Bail:		
Adjustment	324	186
Spring tension adjustment	322	186
Contact:		
Bracket adjustment	327	187
Springs adjustment	326	187
Spring tension adjustment:		
End-of-line indicator	345	192
Tape counter mechanism	332	190
Worm feed-pawl spring adjustment	333	190
Worm-shaft end-play adjustment:		
End-of-line indicator	341	192
Tape counter mechanism	325	187

☆ U. S. GOVERNMENT PRINTING OFFICE : O—1948